BERKO®
A Marley Engineered Products Brand
470 Beauty Spot Rd. E
Bennettsville, SC 29512

SUBMITTAL SHEET
BKOC SERIES
COMMERCIAL BASEBOARD HEATER

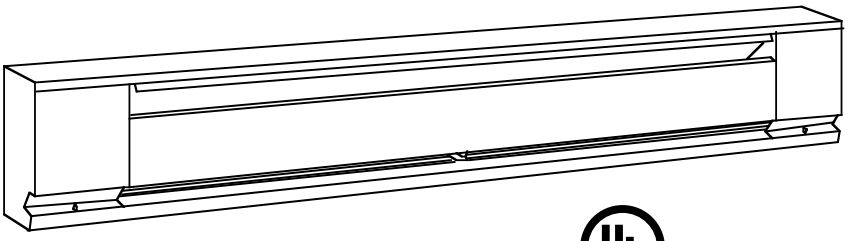

c UL us

CAPACITIES
282 TO 2500 W 2′6″, 3′, 4′, 5′, 6′ or 8′ lengths

See Selection Chart for all Options

JOB NAME: _____

LOCATION: _____

ARCHITECT: _____

ENGINEER: _____

CONTRACTOR: _____

SUBMITTED BY: _____ DATE: _____

TAG/ITEM	QTY.	CATALOG NUMBER	HEATER			AMPS	LENGTH	WEIGHT
			KW	VOLTS	Ø			

ACCESSORIES AND CONTROLS	TAG/ITEM	QTY.	CATALOG NUMBER	DESCRIPTION

SUBMITTED BY:	DATE

APPROVED BY:	DATE

BKOC SERIES

ARCHITECT'S AND ENGINEER'S SPECIFICATIONS*

Furnish and install where indicated on plans, electric baseboard heaters, suitable for continuous operation as manufactured by Berko,® A Marley Engineered Products® Brand, Bennettsville, SC. Heaters shall be cULus listed.

ENCLOSURE: The heaters shall be fabricated of minimum .024 inch steel with minimum .040 inch steel control boxes. Support brackets shall be .035 inch steel. Junction box enclosure to have provisions for incoming and outgoing cable with cable clamp for restraining without additional hardware. Ground wire pigtail provided in each junction box for grounding.

FRONT COVER: The front cover shall be fabricated of minimum .048 inch steel.

HEATING ELEMENT: The heating element wire shall consist of 80% nickel, 20% chromium, and shall be encased in steel sheath to ensure long and trouble free life. Aluminum fins shall be so designed as to block sheath radiation to front and back of heater body and pressure bonded to steel sheath.

INSTALLATION: Heaters shall be designed to permit use of supply conductors with 60°C insulation.

GENERAL: Beige durable textured polyester powder coat finish for corroison resistance. Linear thermal cut-out shall be factory installed to automatically shut off heater in event of overheating and reactivate heater when temperatures return to normal. The complete heater shall have a height of 6 ¾ inches and a depth of 2 ⅞ inches. Heaters shall have cULus approval for mounting on any floor surface including carpeting

**Berko reserves the right to change specifications without prior notice.*

Models & Specifications:

ITEM INFORMATION		ELECTRICAL DATA			DIMENSIONAL DATA	
CATALOG NO.	UPC	VOLTS	WATTS	AMPS	LENGTH	SHIP WT.
BKOC25126W	685360010090	120	500	4.2	30"	7.8 lbs
BKOC25026W	685360009858	208	500	2.4		
BKOC25426W	685360010366	240/208	500/376	2.1/1.8		
BKOC25726W	685360010670	277/240/208	500/376/282	1.8/1.6/1.4		
BKOC2513W	685360010137	120	750	6.5	36"	9.0 lbs
BKOC2503W	685360009896	208	750	3.6		
BKOC2543W	685360010403	240/208	750/564	3.1/2.7		
BKOC2573W	685360010717	277/240/208	750/564/423	2.7/2.4/2.0		
BKOC2514W	685360010175	120	1000	8.3	48"	11.5 lbs
BKOC2504W	685360009933	208	1000	4.8		
BKOC2544W	685360010441	240/208	1000/752	4.2/3.6		
BKOC2574W	685360010755	277/240/208	1000/752/564	3.6/3.1/2.7		
BKOC2515W	685360010212	120	1250	10.4	60"	13.0 lbs
BKOC2505W	685360009971	208	1250	6.0		
BKOC2545W	685360010489	240/208	1250/940	5.2/4.5		
BKOC2575W	685360010793	277/240/208	1250/940/705	4.5/3.9/3.4		
BKOC2516W	685360010250	120	1500	12.6	72"	15.5 lbs
BKOC2506W	685360010014	208	1500	7.2		
BKOC2546W	685360010526	240/208	1500/1128	6.3/5.4		
BKOC2576W	685360010830	277/240/208	1500/1128/846	5.4/4.7/4.1		
BKOC2508W	685360010052	208	2000	9.6	96"	20 lbs
BKOC2548W	685360010564	240/208	2000/1504	8.3/7.2		
BKOC2578W	685360010878	277/240/208	2000/1504/1128	7.2/6.3/5.4		
BKOC25008W	685360009810	208	2500	12.0	96"	20 lbs
BKOC25408W	685360010328	240/208	2500/1880	10.4/8.7		
BKOC25708W	685360010632	277/240/208	2500/1880/1410	9.0/7.5/6.8		

Approvals: _____ _____ _____

Optional Controls & Accessories:

CATALOG NO.	UPC	DESCRIPTION	SHIP WT.
TA1AW	098319730411	SP Thermostat, rated 22A @ 120–277V	1 lbs
TA1TPAW	685360185996	Tamper-Resistant Version of TA1AW	1 lbs
TA2AW	685360186009	DP Thermostat, rated 22A @ 120–277V	1 lbs
TA2TPAW	098319730442	Tamper-Resistant Version of TA2AW	1 lbs
HCA2415/20W	098319730466	240V Load Transfer Switch, 20A	1 lbs
HCA1215/20W	098319730459	120V Load Transfer Switch, 20A	1 lbs
RSA1224	098319714800	120V/24V Transformer Relay, 22A	1 lbs
RSA2024	098319714855	208V/24V Transformer Relay, 22A	1 lbs
RSA2424	098319714909	240V/24V Transformer Relay, 22A	1 lbs
RSA2724	098319714954	277V/24V Transformer Relay, 19A	1 lbs
RA1W	098319730473	120V Duplex Receptacle	1 lbs
DSW2W	685360165066	Double-Pole Power On/Off Switch rated 20A @ 120–277V	1 lbs
PR24	098319713674	Single-Pole Power Relay, 24VControl rated 30A @ 120–240V, 23A @ 277V	1 lbs
PR120	098319713681	Same as PR24 except with 120V Control	1 lbs
ICANW	685360011097	Inside Corner	1 lbs
RA1COMPW	098319730480	Duplex Receptacle Cover only — carton of 10	1 lbs

NOTE: For high-altitude baseboard heater (mounted above 7,500 ft.), add suffix "H" to catalog number. 8 ft. length baseboards must be ordered in multiples of two pieces for shipment.

Filler Sections:

CATALOG NO.	UPC	DESCRIPTION	SHIP WT.
FS12	098319731500	1 ft. Filler Section	2 lbs
FS24	098319731517	2 ft. Filler Section	4 lbs
FS36	098319731524	3 ft. Filler Section	6 lbs
FS48	098319731531	4 ft. Filler Section	8 lbs
FSJ2	098319731548	2 in. Joiner Strip	.5 lbs

Blank Sections:

CATALOG NO.	UPC	DESCRIPTION	SHIP WT.
BKOCBDA2W	685360009315	2.6 ft. Blank Section	4 lbs
BKOCBDA3W	685360009339	3 ft. Blank Section	5 lbs
BKOCBDA4W	685360009353	4 ft. Blank Section	7 lbs
BKOCBDA5W	685360009377	5 ft. Blank Section	9 lbs
BKOCBDA6W	685360009391	6 ft. Blank Section	11 lbs
BKOCBDA8W	685360009414	8 ft. Blank Section	14 lbs

Dimensions and Clearances:

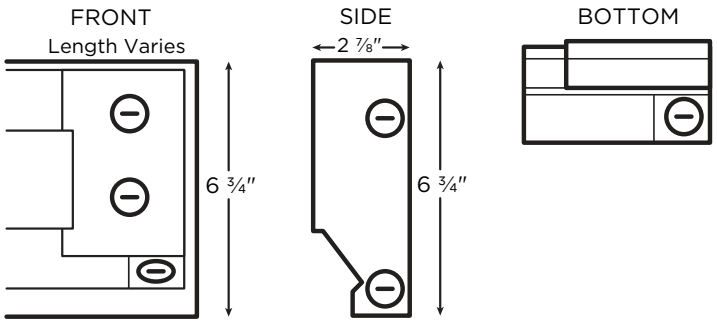

No matter the industry or application, Marley Engineered Products has a robust portfolio of innovative, reliable, high-performance comfort heating and ventilation solutions for all your heating needs.

For more information or assistance on your next project, contact Technical Services at 800-642-4328

Scan the QR code to access additional specs and features

Approvals: _____ _____ _____