TH108PLUS

User Guide

Electronic Thermostat

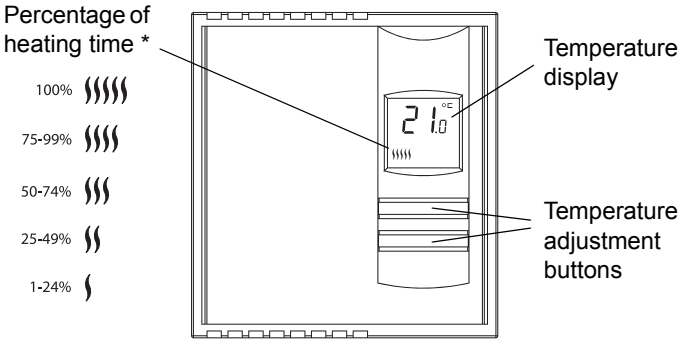

* The thermostat displays the percentage of heating time required to maintain the desired temperature. For example, is displayed when heating is activated 40 percent of the time.

1 Description

This thermostat can be used to control an electric heating system such as a baseboard heater, a radiant ceiling, a radiant floor, a convector, etc.

The thermostat cannot be used with the following:

- a resistive load under 2 A
- a resistive load over 12.5 A
- systems driven by a contactor or a relay (inductive load)
- fan-equipped heating systems
- central heating systems

SUPPLIED PARTS

- One (1) thermostat
- Two (2) 6-32 mounting screws
- Two (2) solderless connectors

2 Installation

TURN OFF POWER OF THE HEATING SYSTEM AT THE MAIN POWER PANEL TO AVOID ELECTRIC SHOCK.

Loosen the screw holding the control module to the base. The screw cannot be completely removed. Lift the control module to remove it from the base.

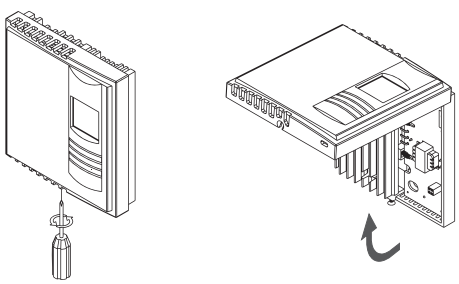

Make the appropriate connections. Please note that the thermostat wires are non-polarized; either wire can be connected to either terminal.

NOTE: *All cables and connections must conform to the local electrical code. Special CO/ALR solderless connectors must be used when connecting with aluminium conductors.*

2-wire installation

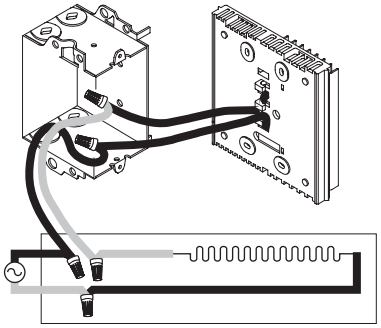

4-wire installation

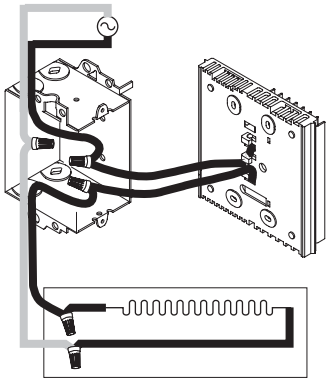

Align and affix the base to the electrical box.

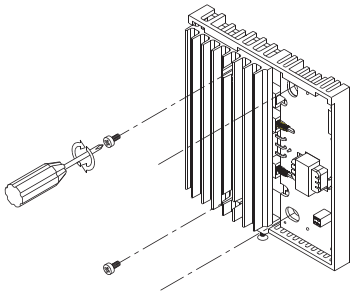

Set the switch at the back of the removable part of the thermostat to °C or °F.

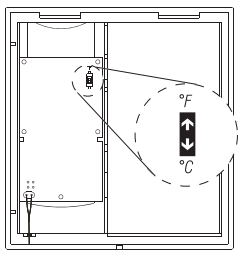

Replace the front part of the thermostat on the base and secure it in place with the screw.

NOTE*: Keep the air vents of thermostat clean and unobstructed at all times.*

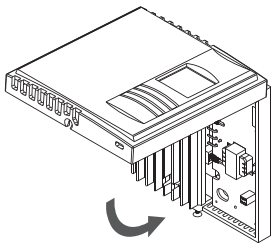

❸ Temperature Display and Setting

The thermostat normally displays the actual (ambient) temperature.



- To view the setpoint temperature, press once on either temperature adjustment button. The icon ➧ appears during the setpoint display.
- To change the setpoint temperature, press the appropriate button until the desired value is displayed.

***NOTE**: The display is backlit for 10 seconds when either button is pressed.*

❹ Power Outage

During a power outage, the setpoint is saved in memory. You do not need to adjust the temperature when power returns.

❺ Specifications

- Supply: 240 VAC, 50/60 Hz

- Minimum load: 2 A (resistive only)
500 W @ 240 VAC

- Maximum load: 12.5 A (resistive only)
3000 W @ 240 VAC

- Display range: 0 °C to 50 °C (32 °F to 122 °F)

- Setpoint range: 5 °C to 30 °C (40 °F to 85 °F)

- Storage: -20 °C to 50 °C (-4 °F to 120 °F)

- Approval: c UL us

❻ Troubleshooting

PROBLEM	SOLUTIONS
Thermostat is hot.	This is normal. Under normal operation, the thermostat housing can reach a temperature between 35 °C (95 °F) and 40 °C (104 °F).
Displayed temperature is wrong.	Correct if any the following conditions applies: • The thermostat is exposed to air draft. • The sticker on the thermostat's screen has not been removed. • The thermostat is located near or above a heat source such as a light dimmer.
Display disappears and reappears after a few minutes.	The thermal protection device on the heater has temporarily opened. This can happen if the heater is obstructed by furniture or curtain and has overheated, or if the heater's thermal protection device is too sensitive.
Display looks faded when heating is activated.	The heating system is less than the required minimum load. This thermostat cannot be used below that rating.

☑ Warranty

Aube warrants this product, excluding battery, to be free from defects in the workmanship or materials, under normal use and service, for a period of three (3) year from the date of purchase by the consumer. If at any time during the warranty period the product is determined to be defective or malfunctions, Aube shall repair or replace it (at Aube's option).

If the product is defective,

(i) return it, with a bill of sale or other dated proof of purchase, to the place from which you purchased it, or

(ii) contact Aube. Aube will make the determination whether the product should be returned, or whether a replacement product can be sent to you.

This warranty does not cover removal or reinstallation costs. This warranty shall not apply if it is shown by Aube that the defect or malfunction was caused by damage which occurred while the product was in the possession of a consumer.

Aube's sole responsibility shall be to repair or replace the product within the terms stated above. AUBE SHALL NOT BE LIABLE FOR ANY LOSS OR DAMAGE OF ANY KIND, INCLUDING ANY INCIDENTAL OR CONSEQUENTIAL DAMAGES RESULTING, DIRECTLY OR INDIRECTLY, FROM ANY BREACH OF ANY WARRANTY, EXPRESS OR IMPLIED, OR ANY OTHER FAILURE OF THIS PRODUCT. Some provinces, states or regions do not allow the exclusion or limitation of incidental or consequential damages, so this limitation may not apply to you.

THIS WARRANTY IS THE ONLY EXPRESS WARRANTY AUBE MAKES ON THIS PRODUCT. THE DURATION OF ANY IMPLIED WARRANTIES, INCLUDING THE WARRANTIES OF MERCHANTABILITY AND FITNESS FOR A PARTICULAR PURPOSE, IS HEREBY LIMITED TO THE THREE-YEAR DURATION OF THIS WARRANTY. Some provinces, states or regions do not allow limitations on how long an implied warranty lasts, so the above limitation may not apply to you.

This warranty gives you specific legal rights, and you may have other rights which vary from one province, state or region to another.

☎ Customer assistance

If you have any questions about the product installation or operation, or concerning the warranty, contact us at:

705 Montrichard
Saint-Jean-sur-Richelieu, Quebec
J2X 5K8
Canada

Tel.: (450) 358-4600
Toll-free: 1-800-831-AUBE
Fax: (450) 358-4650

Email: aube.service@honeywell.com

For more information on our products, go to
www.aubetech.com