PROJECT: _____ **ITEM NO.:** _____

FOOD WASTE REDUCTION SYSTEM

The WasteXpress® Food Waste Reduction System is a food waste handling solution designed to increase productivity and profitability by reducing bulk kitchen waste by up to 85%—or ten bags of waste to less than two. Ideal for municipalities restricting disposer use and facilities participating in compost programs.

PRODUCT FEATURES & SPECIFICATIONS

REDUCES FOOD WASTE VOLUME

- System grinds kitchen waste, presses out water, and expels semi-dry, finely-ground particles into a 10-gallon (37.9 liter) waste bin
- Processes 100% organic waste for compost, or a mixture of food waste with up to 50% disposables
- Dewatered pulp can be disposed of into a waste or compost receptacle
- Heavy-duty 5 HP WX500 disposer processes both liquid and solid kitchen waste
- Capacity: 700 lbs. (317.5 kg) of waste per hour
- Water consumption varies by application: 2-3 GPM (7.6-11.4 LPM) for bowl or 5 GPM (18.9 LPM) for trough

SYSTEM OVERVIEW

- Compact, under-table design fits under standard table – minimum height 34" (863.6 mm)
- WX500 disposer and dewatering unit made from durable, corrosion-resistant stainless steel construction
- NEMA 4X stainless steel electrical control box
- Safety Interlock on discharge chute

CLEANING

- Easily removable auger, auger screen, and chute – no tools required
- Quick and easy to clean – dishwasher safe components
- Does not require cardboard



Typical installation shown. Dish table, plumbing, and electrical connections not included.

ELECTRICAL SPECIFICATIONS

- ☐ 208-230V, 60 Hz, 3 Ph, 10.3/10.8 amps, **cULus** (Disposer 8.6/8.8 amps) (Dewatering Unit 1.7/2 amps)
- ☐ 460V, 60 Hz, 3 Ph, 5.4 amps, **cULus** (Disposer 4.4 amps) (Dewatering Unit 1 amp)

MOUNTINGS

- ☐  #6 Collar Adapter Kit – ideal for welding into trough or sink, provides 6-5/8" (168.3 mm) opening, includes permanent splash baffle
- ☐  #7 Collar Adaptor Kit – ideal for welding into sink, provides 6-5/8" (168.3 mm) opening, includes removable splash baffle and stopper
- ☐  18" Type A Sink Bowl Assembly – bowl with two (2) water nozzles, includes removable splash baffle and stainless bowl cover

ACCESSORIES

- ☐ Additional 10 gallon (37.9 liter) Waste Bin (all systems include one (1) waste bin)
- ☐ Dejamming Wrench
- ☐ Trough Nozzle - 1" (25.4 mm) NPT
- ☐ Inlet/Outlet Flange - 2" (50.8 mm) NPT (secondary, for trough or high water flow applications)
- ☐ Additional Magnetic Silver Saver (all trough systems include one (1) Magnetic Silver Saver)

A complete collection of our product drawings is available for download at the **InSinkErator Revit/CAD** Library, which can be found at www.insinkerator.com/foodservice. Product information is also accessible on ***The KCL CADalog***. More information is available from KCL at www.kclcad.com.

1250 International Drive
Mount Pleasant, WI 53177
TEL: 800-845-8345

www.insinkerator.com/foodservice

InSinkErator ©2023 Printed in USA Form No. F483-23C-83-85

TYPICAL INSTALLATION

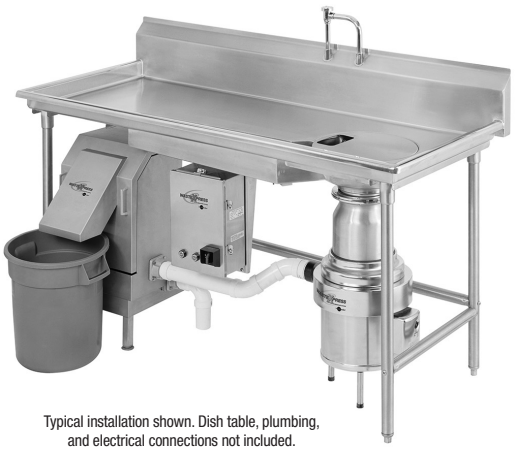

Typical installation shown. Dish table, plumbing, and electrical connections not included.

SYSTEM COMPONENTS



WasteXpress Disposer



WasteXpress Control Panel



WasteXpress Dewatering Unit

SYSTEM INCLUDES:

- WasteXpress Disposer (WX500)
- WasteXpress Control Panel (WX101A)
- WasteXpress Dewatering Unit (WX)
- Mounting – Collar with Removable or Permanent Splash Baffle OR Bowl with Removable Splash Baffle and Sink Cover
- Syphon Breaker
- Flow Control Valve*
- 10 gallon (37.9 liter) Waste Bin
- (2) 24V Water Solenoids
- Magnetic Silver Saver (trough only)

ITEMS SUPPLIED BY OTHERS:

- ☐ Plumbing from cold water supply to bowl or trough
- ☐ Plumbing from hot water supply to dewatering unit
- ☐ Plumbing from disposer to dewatering unit or dewatering unit to floor sink or floor drain
- ☐ Shut-off valves
- ☐ Electrical connections

NOTE: Install all components per the Instruction, Care and Use manual and in accordance to local, state, and/or national plumbing and electrical codes.

GENERAL NOTES

- When positioning disposer, ensure that the overload reset button is accessible by end user.
- Connect cold water to either the sink bowl or end of trough.
- For proper removal of discharge chute, ease of cleaning, and general maintenance: Position the dewatering unit with the front surface of the discharge chute recessed 3" (76.2 mm) (see Figure 1) from the front edge of the table and with a minimum clearance of 1" (25.4 mm) between the underside of the table and top of the discharge chute (see Figure 2).
- Position the dewatering unit within 10' (3.1 m) of the disposer outlet flange (see Figure 2).
- When positioning control panel, ensure it is within sight of the disposer and dewatering unit.
- For ease of installation and serviceability: Position the control panel with the front surface recessed 1-1/2" (38.1 mm) from the front edge of the table and with a minimum clearance of 2" (50.8 mm) between the underside of the table and the top of the control panel.
- Maintenance: Disassemble and clean the dewatering unit a minimum of once daily. Interior of cabinet and discharge chute can be cleaned with hot soapy water. Auger, screen, and bearing bracket can be cleaned either manually with hot soapy water or in a dishwasher.

PLUMBING NOTES

- 2" NPT – used between disposer, dewatering unit, and drain.
- When connecting the drain line from the disposer to the dewatering unit, use a maximum of (4) 90° bends (45° bends are recommended) with a minimum 1/4" (6.4 mm) drop per foot of run or as local codes apply.
- Trough applications in excess of 10' (3.1 m) and/or systems plumbed with a cold water supply greater than 7 GPM (26.5 LPM) must incorporate the second drain outlet from the pulper and be drained independently to the floor sink or drain.
- 1/2" NPT – used on syphon breaker, solenoid, and flow control valve.
- 1/2" NOM compression – used on sink bowl nozzles.
- 1/2" Ridged Copper (compression) – used on hot water connection to dewatering unit.
- If water pressure exceeds the allowable pressure of 80 psi (551.6 kPa), pressure regulators should be used.
- It is recommended that all fresh water and waste line plumbing connections be terminated with unions for ease of serviceability.
- Note: Some applications can benefit from installing a ball type shutoff valves in the cold and hot water lines. Contact your InSinkErator Representative or the factory for more information.

TROUGH APPLICATIONS – CONTACT FACTORY

- The recommended maximum trough length is 10' (3.1 m).
- A silver saver should be fabricated prior to end of trough to catch utensils and dishes.
- For trough lengths of 10' (3.1 m) or less place water nozzle at end of trough.
- For trough lengths greater than 10' (3.1 m), place one water nozzle at end of trough and one mid stream.
- Trough magnets should be placed within 12" (304.8 mm) of end of trough or trough intersection with sink bowl (see Figure 4).
- Trough magnets can be mounted to trough either by tack welding or using weld studs (see Figure 5 for weld stud pattern).
- Additional trough magnets can be used as necessary.

*Size varies by application: 2 GPM (7.6 LPM) for LEED, 3 GPM (11.4 LPM) for Bowl, 5 GPM (18.9 LPM) for Trough

TYPICAL INSTALLATION – BOWL

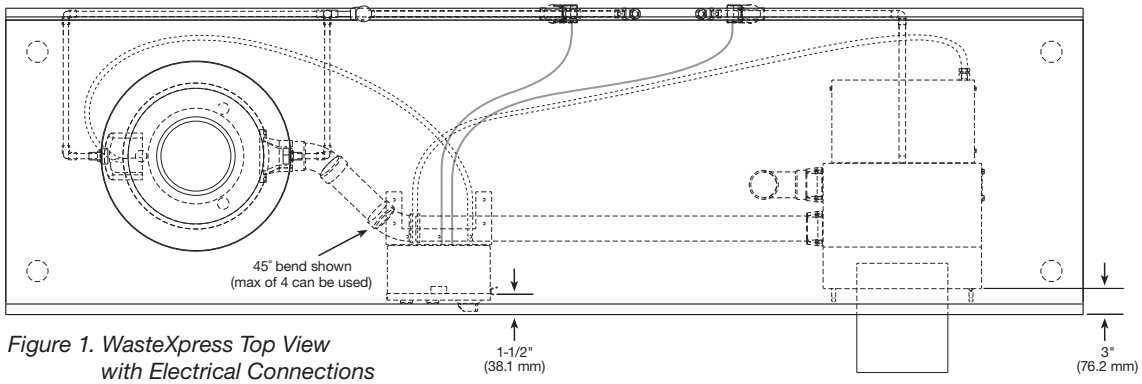

Figure 1. WasteXpress Top View with Electrical Connections

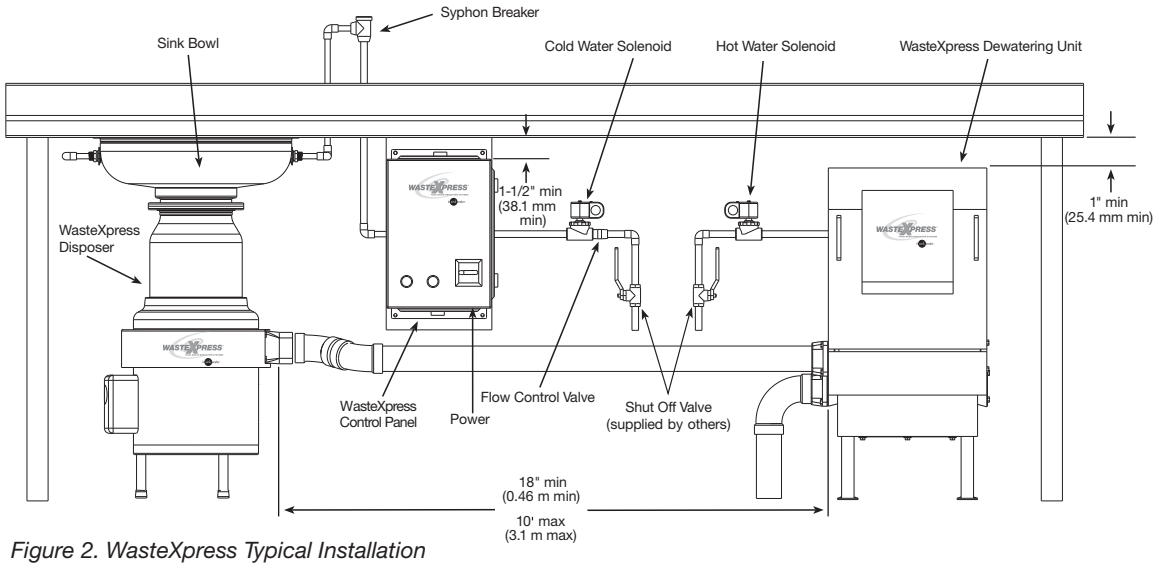

Figure 2. WasteXpress Typical Installation

TYPICAL INSTALLATION – TROUGH

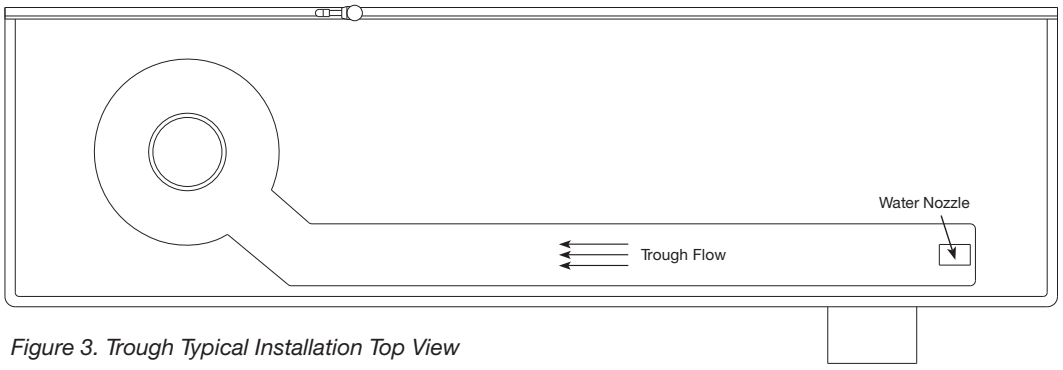

Figure 3. Trough Typical Installation Top View

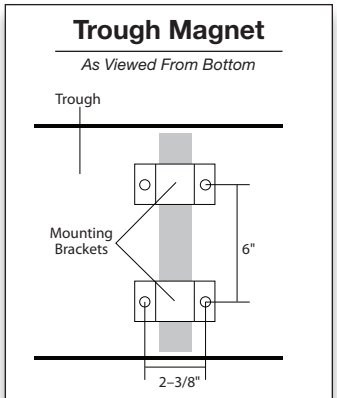

Figure 5. Weld Stud Pattern

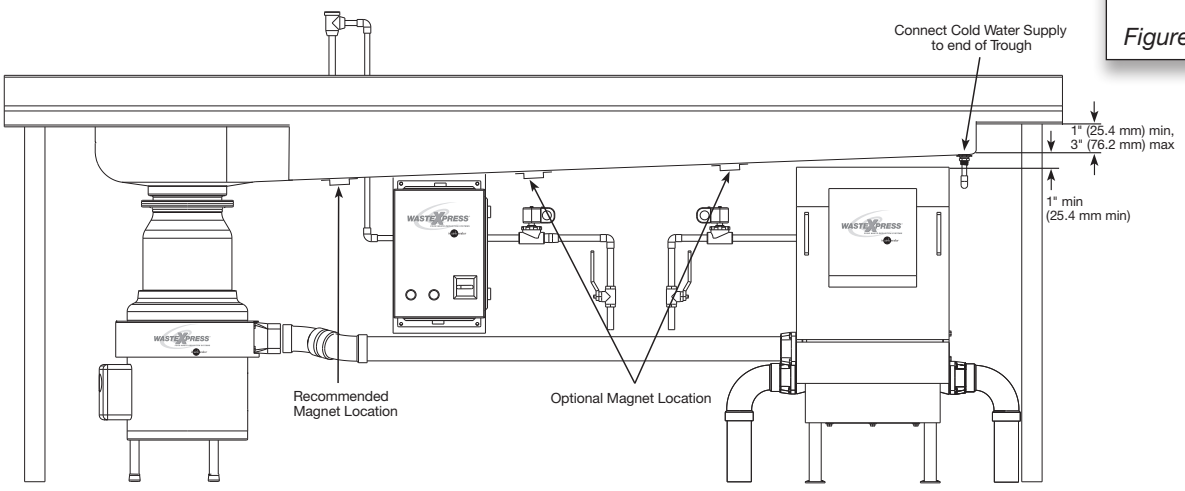

Figure 4. Trough Typical Installation

SYSTEM DIMENSIONS

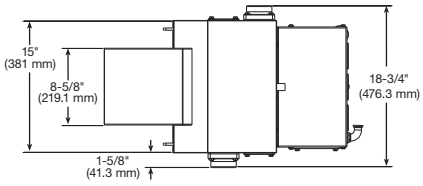

WasteXpress Dewatering Unit Top View

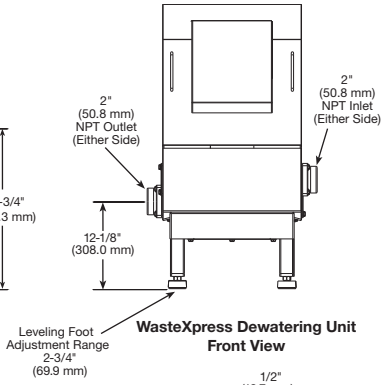

WasteXpress Dewatering Unit Front View

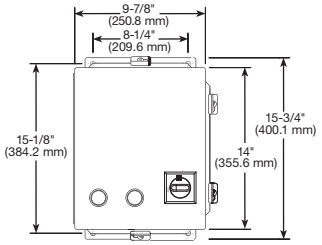

WasteXpress Control Panel Front View

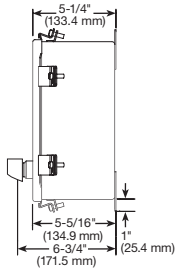

WasteXpress Control Panel Side View

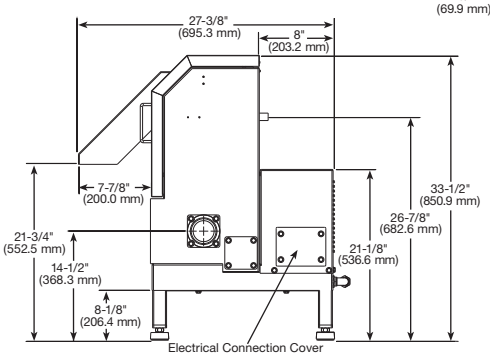

WasteXpress Dewatering Unit Side View

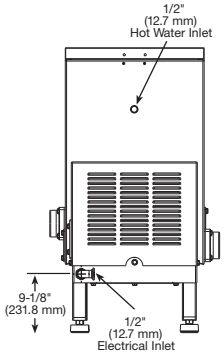

WasteXpress Dewatering Unit Back View

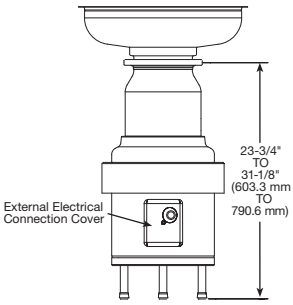

WasteXpress Disposer Front View

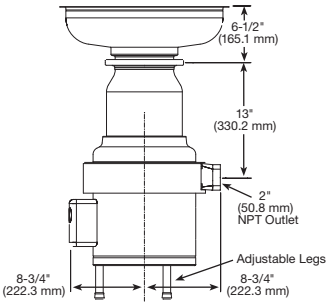

WasteXpress Disposer Side View

NOTE: All WasteXpress® system component height dimensions are max numbers. Leveling foot will allow height to be reduced up to 2-3/4" (69.9 mm).

SAMPLE SPECIFICATION

- InSinkErator WasteXpress. Food waste reduction system with 5 HP disposer, control panel, dewatering unit with interlock on discharge chute. ___ Volts, 60 Hz, 3 Phase operation. _____ disposer mount. Syphon breaker with 1/2" NPT connections; flow control valve; 10 gallon (37.9 liter) waste bin; (2) 24V water solenoids; 2" NPT drain discharge.

PROJECT INFORMATION

Item Number: _____

Quantity: _____

Manufacturer: InSinkErator

Model Number: _____

Electrical Requirements:

_____ volts _____ phase

Project: _____

Address: _____

City/State/Zip: _____

Contact: _____

Phone: _____

Dealer: _____

City/State/Zip: _____

Contact: _____

Phone: _____

Installer: _____

Contact: _____

Phone: _____

Consultant: _____

Contact: _____

Phone: _____

InSinkErator® may make improvements and changes in the specification at any time, in its sole discretion, without notice or obligation and further reserves the right to change or discontinue models. ©2023 InSinkErator®. All rights reserved.