WASTEXPRESS®

FOOD WASTE REDUCTION SYSTEMS

in sink erator®



⚠ WARNING WARNING indicates a hazardous situation which, if not avoided, could result in death or serious injury.

⚠ CAUTION CAUTION indicates a hazardous situation which, if not avoided, could result in minor or moderate injury.

NOTICE NOTICE is used to address practices not related to physical injury.

Please be certain that the person who installs or uses this appliance carefully reads and understands the Safety Instructions contained in this manual.

Table of Contents

Introduction/Typical Installation
- Introduction 4
- Typical Installation 4

Waste Xpress Features 5

WX-101A Control Features/Mounting Control Center
- Introduction 6
- Typical Installation 6

Installing Disposer 7

InSinkErator Mounting Assemblies
- Standard Mounting 8
- Special Mounting 8

Installing Waste Xpress
- Waste Xpress Diagrams 9
- Installing Waste Xpress 10
- Electrical Connections 10

Plumbing Connections
- Waste Inlet Line 11
- Reverse Auger Screen 11
- Change Waste Inlet 11
- Waste Outlet Line 12
- Plumbing Connections 12
- Water Supply Connection 12
- Routing Water Flow 12

Electrical Connections 13

Operating Instructions
- Pre-Operating 14
- Operating Instruction 15
- Operating Waste Xpress System 16
- Operational Tips 16

Cleaning Instruction 17

Troubleshooting
- System Troubleshooting 18
- Disposer Troubleshooting 21
- Waste Xpress Troubleshooting 22

Wiring Diagrams
- Model No. WX-101A-5 (208/240V, 3 phase) 24
- Model No. WX-101A-6 (380/460V, 3 phase) 26

Warranty 28

INTRODUCTION

The InSinkErator® Waste Xpress® is a Foodservice kitchen waste reduction system that utilizes a standard Foodservice disposer in line with the Waste Xpress dewatering system. The kitchen waste is ground through the disposer then transferred to the Waste Xpress where it is compressed. After the waste is compressed, the liquids are sent down the drain line and the solid waste exiting the Waste Xpress is up to 85% less in volume (see Figure 1 for typical installation).

Important – These installation instructions are for the benefit of the installing contractor. InSinkErator and/or InSinkErator Factory Authorized Service Centers do not make original installations. For technical information not covered in these instructions, contact the supplier, an InSinkErator Field Sales Representative, or InSinkErator Foodservice Sales and Service at 1-800-845-8345.

TYPICAL INSTALLATION

A typical Waste Xpress installation incorporates the following connections (see Figure 1):

- Waste Xpress
- Disposer
- Control Center
- Syphon breaker
- Solenoid valves (2)
- Water shut off valve
- Bowl or trough
- Flow control valve
- Cold water (sink or trough)
- Hot water (Waste Xpress)

REQUIRED TOOLS / MATERIALS

The following items are needed to install the disposer:

- Screwdriver
- Adjustable wrench
- Pipe wrench
- Wire nuts
- 7/16" nut driver

The following items may be needed to install the disposer:

- Plumbing putty
- Hacksaw
- Drain auger

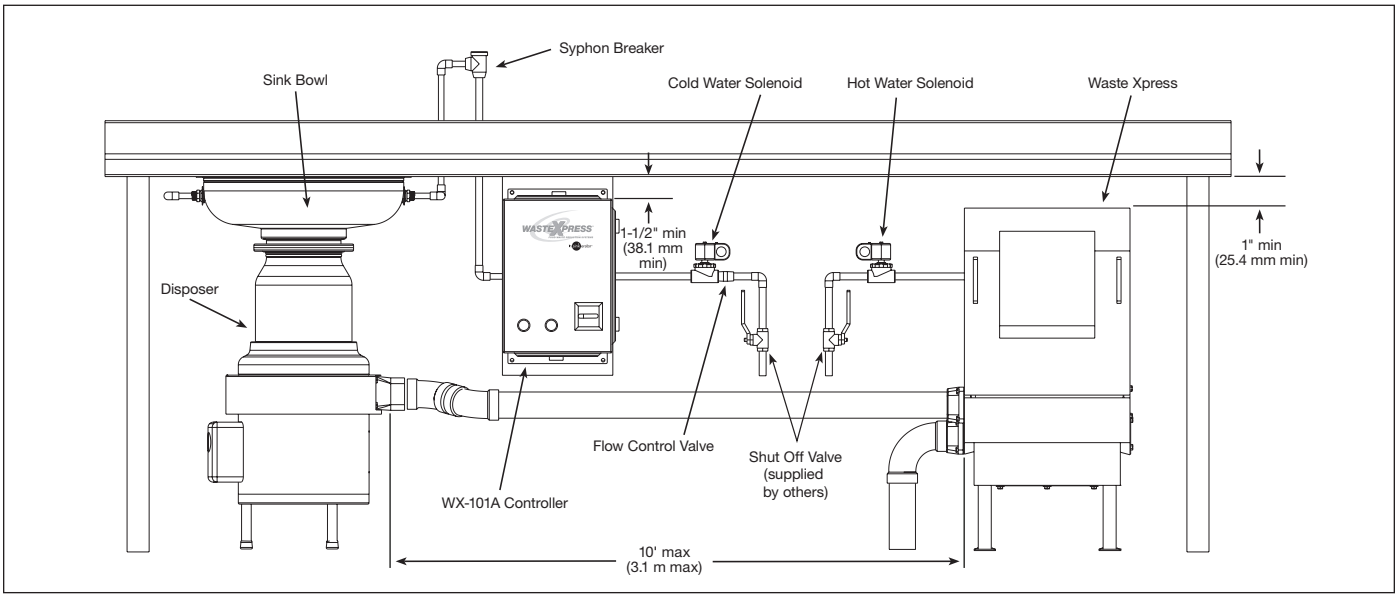

Figure 1. Typical Installation

FEATURES

COMPACT SIZE
The Waste Xpress® is designed to fit under a 34" high commercial kitchen table.

WASTE REDUCTION
Reduces volume by up to 85%.

SAFETY INTERLOCK
The Waste Xpress is equipped with safety interlock on the discharge chute (see Figure 2). This interlock prevents the system (disposer & Waste Xpress) from operating unless the discharge chute is properly seated.

DRAIN CONNECTIONS
- Water outlet should be routed directly to a floor drain (and as close to the Waste Xpress as possible).
- The 2" NPT waste inlet connection can be mounted on either side.
- The 2" NPT water outlet connection can be mounted on either side.
- For trough or high water flow applications, connect both Water Outlet connections for optimum cabinet drainage.
- All drain lines must be a minimum 2" NPT in diameter.

CONSTRUCTION
Stainless steel construction (for physical size see Figure 3).

WASTE MIX
The Waste Xpress can process non-food waste such as paper, light and rigid plastic or food wrappings when mixed with a minimum of 50% food waste.

NOTICE

PROPERTY DAMAGE

Plastic wrap, cans, silverware, rubber, glass and crockery cannot be processed.

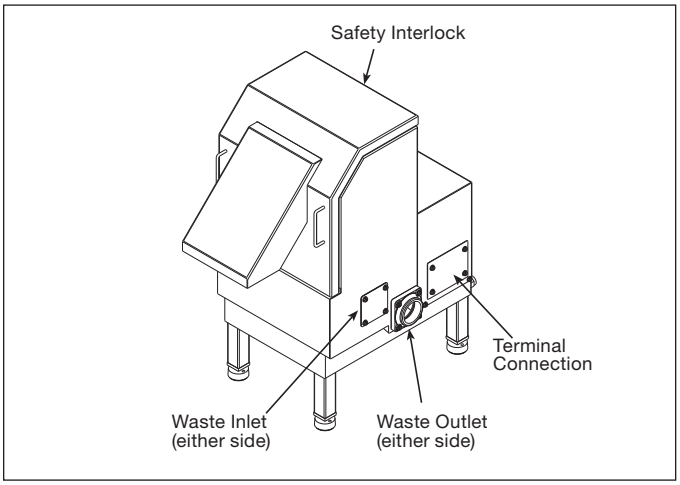

Figure 2.

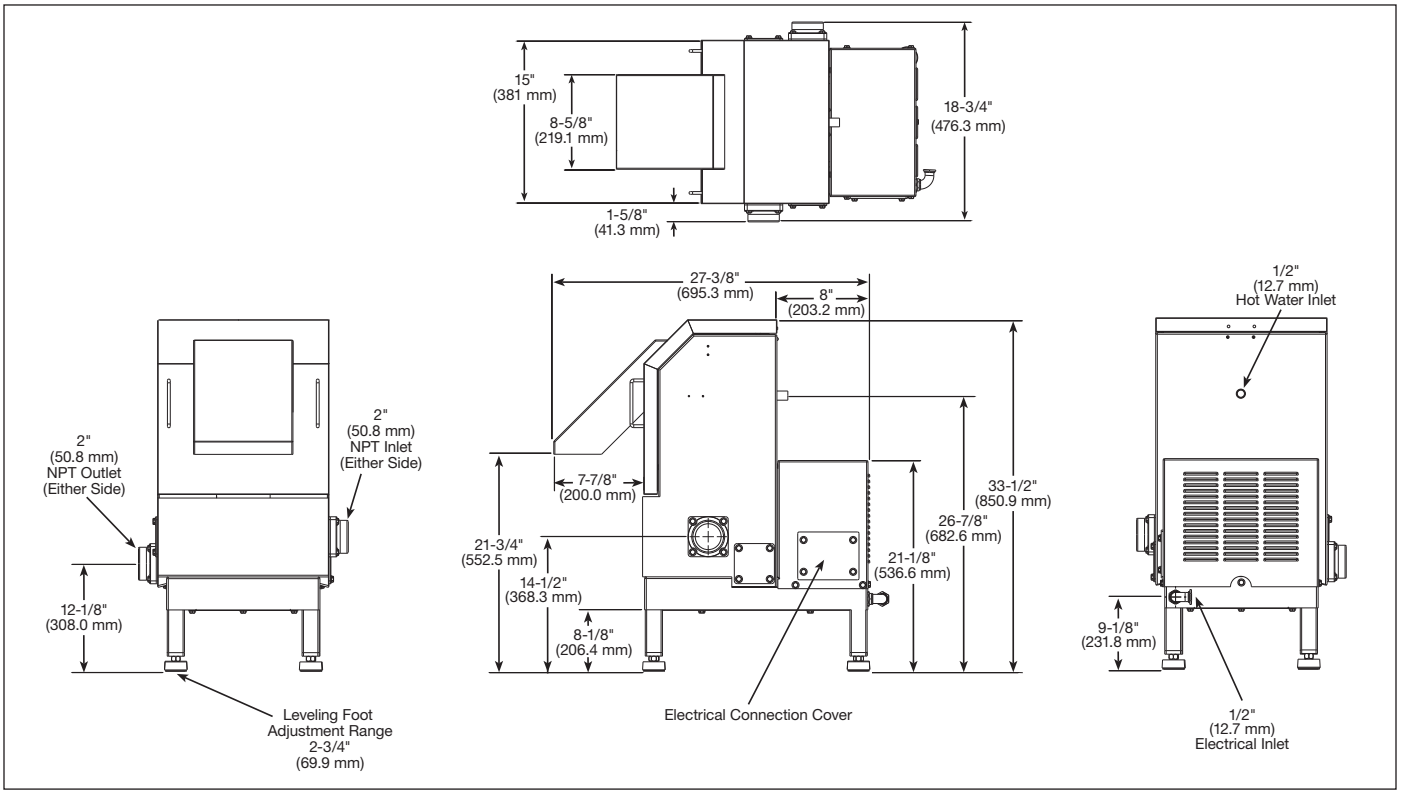

Figure 3. Waste Xpress Dimensions

The WX-101A Control Center is CUL® US listed for use with InSinkErator Waste Xpress® food waste reduction systems. The control center operates the disposer and Waste Xpress. Its main functions are:

- To start and stop the disposer/Waste Xpress system.
- To reverse the direction of the disposer motor automatically upon restart.
- To start the water flow to the disposer.
- To allow water flow for several minutes to flush the drain line after the disposer is turned off.

Table 1. Electrical Specifications

Model	Part No.	Voltage	Phase
WX-101A-5	15258	208/240V	3
WX-101A-6	15258A	380/460V	3

FEATURES

SINGLE BUTTON OPERATION
Disposer and Waste Xpress are controlled by simple ON/OFF button operation.

AUTOMATIC REVERSE
The disposer motor will reverse its direction of rotation automatically upon restart. To avoid motor damage, a delay feature prevents reversing until the post flush is complete.

WATER SHUTOFF DELAY (POST FLUSH)
After the motor is turned off, the water continues to flow for up to 10 minutes. The length of this post flush is controlled by the water shutoff delay timer. The post flush helps ensure that ground food waste is flushed out of the drain line.

AUTOMATIC TIMED DISPOSER SHUTOFF
This water saving feature allows the system to run for 10 minutes before it automatically shuts off and must be manually restarted.

LINE DISCONNECT SWITCH
The switch on the front panel of the control center disconnects the line voltage. It interlocks with the front cover so that the cover cannot be opened unless the switch is in the off position.

LOW VOLTAGE CONTROL
Control operates on a 24 V solid state control circuit.

ENCLOSURE
Stainless steel NEMA 4 construction.

WX TIMER HOT WATER SPRAY ADJUSTABLE
Factory set for 2 minutes off 10 second on controls hot water spray for cleaning of screen.

⚠ WARNING

ELECTRICAL SHOCK

- Ensure that Waste Xpress voltage and phase match that of the electrical supply, control center & disposer. Check nameplate for specification.
- Electrical connections should be made by a qualified electrician and should comply with all local codes.
- Turn off electrical supply to Waste Xpress, control center & disposer before attempting to work on it. Test with a volt meter or circuit tester to ensure that power is off.
- Do not operate unit with panels removed.
- All components (disposer, WX, control center and solenoids) must be carefully and permanently grounded.
- A properly fused disconnect must be installed at Waste Xpress, control center & disposer electrical supply source.
- Use only NEMA 4 watertight electrical connectors when connecting to junction box.

MOUNTING THE CONTROL CENTER

Use the flanges at the back of the control center enclosure and only mount panel in the upright vertical position (door hinge is on the left). See Figure 4.

Locate control center within sight of disposer per local codes.

If box is mounted to the sink table, recess the box so that the buttons do not extend beyond the table's edge (see Figure 4).

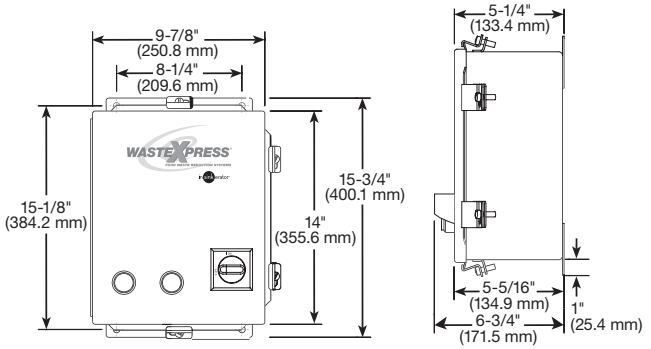

Figure 4. Control Center Dimensions

⚠ WARNING

PERSONAL INJURY

- For safe operation, the minimum required distance from the table top or trough to the mounting flange is 6 inches for standard body disposers (as specified by UL). See Figure 5.
- Moving shredder parts may cause serious injury if a hopper or cone is not properly installed.

NOTICE

PROPERTY DAMAGE

To avoid excess vibration, InSinkErator recommends a minimum countertop thickness of 16 gage stainless steel.

DISPOSER MOUNTING

The disposer can be mounted to the sink or trough using a standard InSinkErator mount or an InSinkErator mounting adaptor.

NOTE: *The InSinkErator #5 Sink Flange can not be used with the Waste Xpress system.*

NOTE: *InSinkErator must approve attachment to a non-InSinkErator sink.*

CLEAN THE DRAIN LINE

With a drain line auger, periodically clear away all hardened waste material in the horizontal drainpipe running from the drain trap to the main waste line.

NOTICE

PROPERTY DAMAGE

Clean the drain line prior to connecting the disposer. With a drain line auger, ensure that all preexisting hardened waste material in the horizontal drainpipe running from the drain trap to the main waste line is cleared.

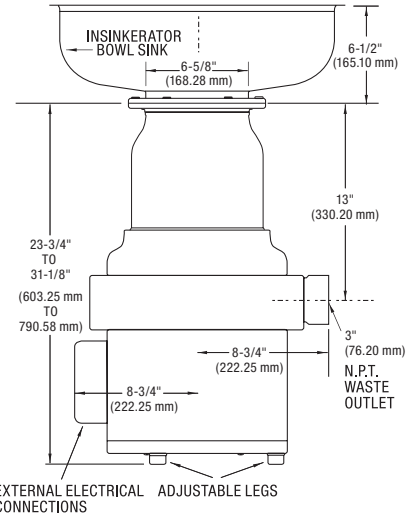

Figure 5.

STANDARD MOUNTING ASSEMBLY

1. Place mounting flange (1) over the existing collar adaptor connection lip or sink bowl flange (this may require some force).
2. Push the mounting flange up out of the way and fit the groove in the mounting gasket (2) onto the connection lip. Make sure the gasket is fully seated on the flange.
3. Push the mounting flange down over the mounting gasket, fitting the threaded mounting flange fasteners into the recesses in the top of the mounting gasket.
4. From the bottom, insert two screws through opposite sides of the flat gasket (3) and mounting flange, into the threaded fasteners in the existing flange. The screws should protrude about 1/4" below the mounting gasket.
5. Position the disposer beneath the mounting gasket and raise it to engage the two protruding screws in the disposer body flange keyhole slots. Secure the remaining screws and position the disposer correctly for the plumbing connections. If disposer legs are included, adjust the legs to support the disposer.

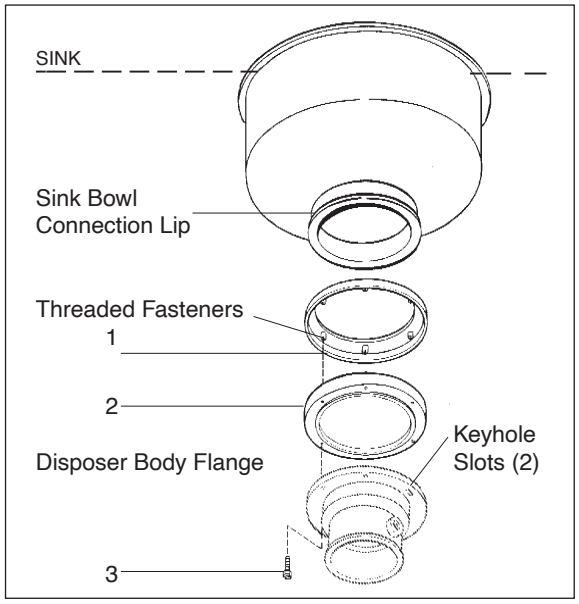

Figure 6. Adaptor Assembly with Disposer.

SPECIAL INSINKERATOR MOUNTING ASSEMBLIES

When installing an InSinkErator Foodservice disposer to any other mounting configuration, a special mounting adaptor kit is required. The special mountings are described in the Mounting Adaptor Selection Guide (for more information, call 1-800-845-8345 or go to www.insinkerator.com). Figures 8-10 show examples of non-InSinkErator style sinks. (Mounting instructions are included in each special mounting adaptor kit.)

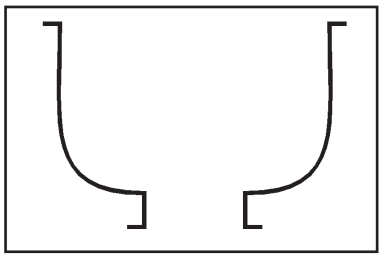

Figure 8. Outward Flange

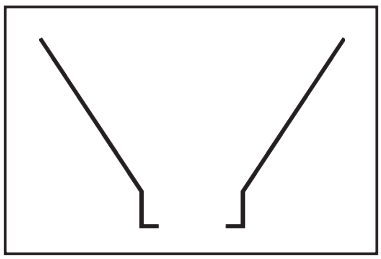

Figure 9. Inward Flange

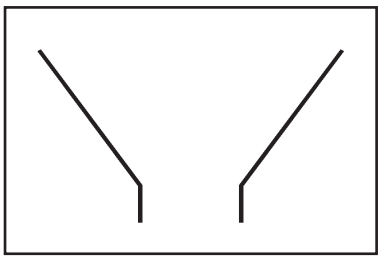

Figure 10. Straight Flange

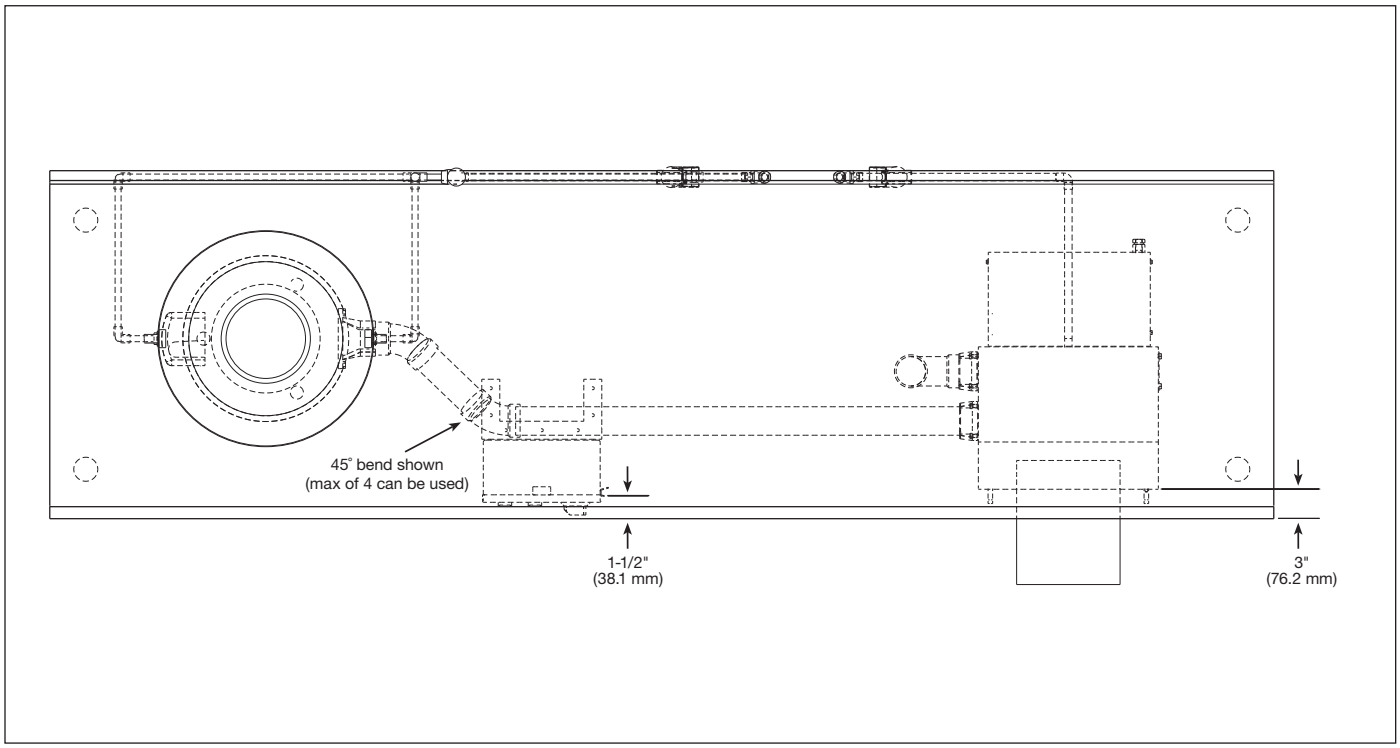

Figure 11. Top View

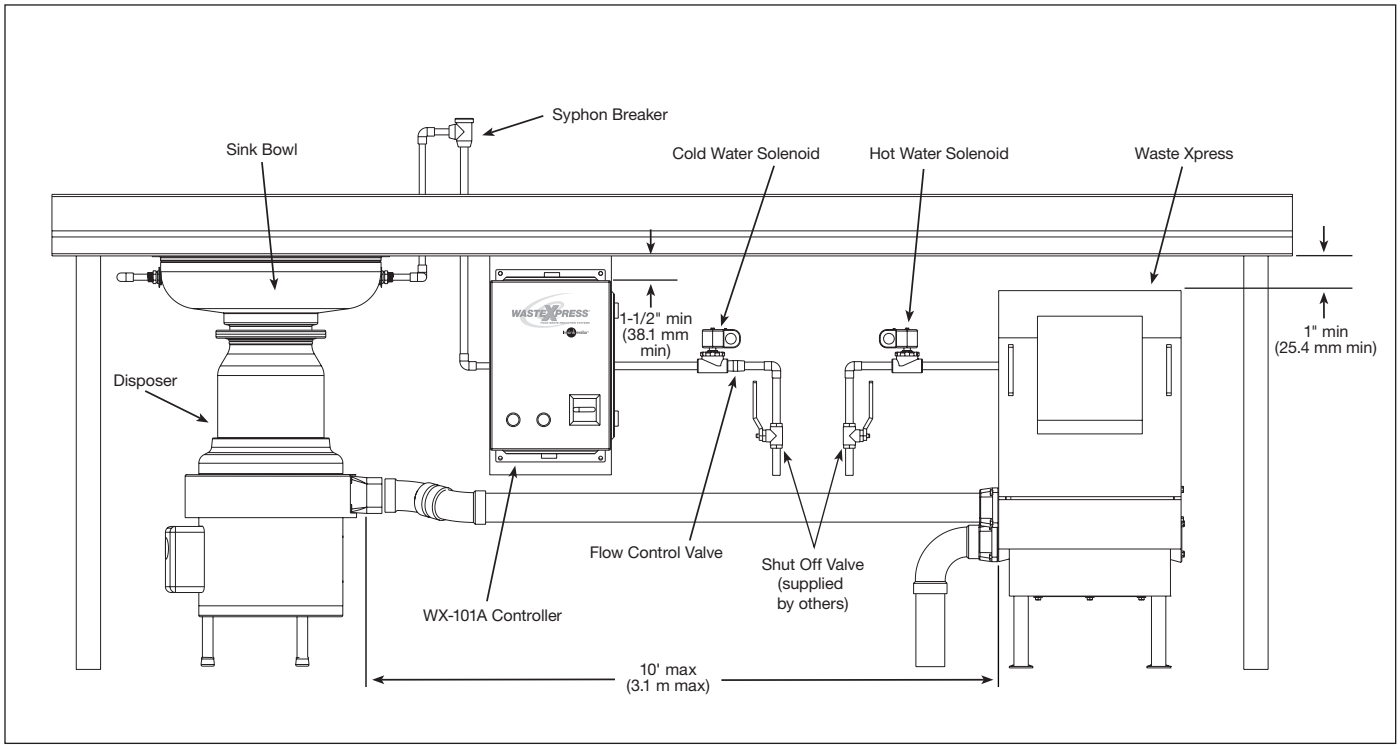

Figure 12. Typical Installation Diagram

WASTE XPRESS LOCATION

***NOTE**: Prior to installing the Waste Xpress the disposer and control center should be installed as specified within this manual.*

- Position Waste Xpress within 10 feet of the disposer outlet flange. A maximum of four (4) 90° elbows can be used between the disposer and Waste Xpress (prefer 45° elbow).
- Level Waste Xpress by turning the legs in or out with a wrench. Place a level on top of the unit.

⚠ WARNING

ELECTRICAL SHOCK

- Ensure that Waste Xpress voltage and phase match that of the electrical supply, control center & disposer. Check nameplate for specification.
- Electrical connections should be made by a qualified electrician and should comply with all local codes.
- Turn off electrical supply to Waste Xpress, control center & disposer before attempting to work on it. Test with a volt meter or circuit tester to ensure that power is off.
- Do not operate unit with panels removed.
- All components (disposer, WX, control center and solenoids) must be carefully and permanently grounded.
- A properly fused disconnect must be installed at Waste Xpress, control center & disposer electrical supply source.
- Use only NEMA 4 watertight electrical connectors when connecting to junction box.

ELECTRICAL CONNECTIONS

The Waste Xpress system requires power only to the control center. The control center powers the disposer and Waste Xpress.

1. Remove retaining screw and disposer electrical cover.
2. Open control center cover by loosening locking clamps securing it.
3. Remove terminal cover from Waste Xpress (see Figure 13).
4. Connect incoming power line to electrical door disconnect switch in WX-101A.
5. Connect disposer motor leads to terminal block locations.
6. Connect cold water solenoid to appropriate terminals 4 and 13. Connect hot water solenoid to terminal 18 and 7.
7. Connect wire bundle between WX-101A and Waste Xpress unit as detailed in wiring diagram. Door interlock connections are #3 and #95. Replace terminal cover.
8. Wire per local electrical codes and install using NEMA 4 watertight electrical connectors (not supplied).
9. Install disposer terminal box cover and secure with retaining screw.
10. Secure WX-101A cover with locking clamps.

⚠ WARNING

ELECTRICAL SHOCK

Do not pinch or damage the electrical wires when installing the terminal box.

	WX Terminal		WX-101A Terminal	Voltage
WX Auger Motor 3 Phase	T1, T2, T3	To	T1, T2, T3	Line
WX Magnetic Interlock	3, 95	To	3, 95	24V
Cold Water Solenoid (Disposer)			4, 13	24V
Hot Water Solenoid (WX Spray)			7, 18	24V
Disposer		To	See Diagrams	Line

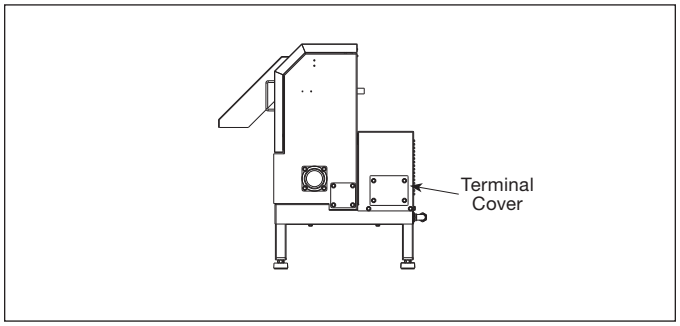

Figure 13.

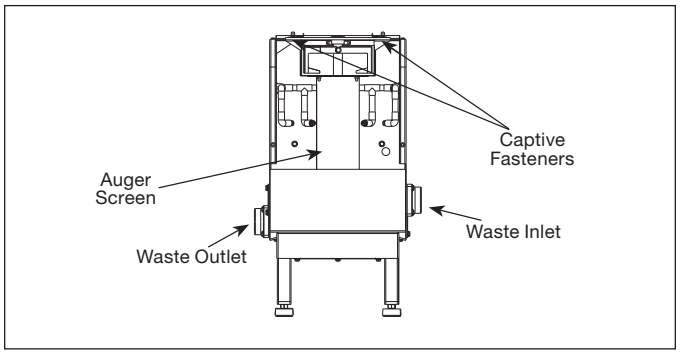

Figure 14. Cover Removed

NOTICE

PROPERTY DAMAGE

Water connections must comply with all local plumbing codes.

WASTE INLET LINE

Connect the disposer outlet flange as close as possible and with as few as possible 90° elbows to the Waste Xpress inlet.

NOTE: *The maximum allowable distance between the disposer outlet flange and the Waste Xpress inlet is 10 feet with a maximum of four (4) 90° elbows.*

1. Connect the disposer outlet to the Waste Xpress inlet using 2" NPT plumbing. The run between the disposer and Waste Xpress must have 1/4" slope per foot and must comply with all local codes.

NOTE: *All horizontal runs should be as short as possible (not to exceed 10 ft.), with an approximate fall of 1/4" per foot.*

TO CHANGE WASTE INLET OR OUTLET SIDE ON WASTE XPRESS:

A. Remove four screws holding inlet fitting and gasket in position (see Figure 18).

B. Remove four screws holding the cap and gasket in position (see Figure 18).

C. Install gaskets, cap and inlet fitting on reverse side and secure with appropriate screws.

TO REVERSE AUGER SCREEN:

A. Holding both handles remove discharge chute of the Waste Xpress by tilting it upward (see Figure 13).

B. Remove auger-bearing bracket by sliding the two captive fasteners inward and then pull bracket upward (see Figure 14).

C. Lift auger and screen up and then out (see Figure 14).

D. Remove auger from screen by lifting up (see Figure 15).

E. Remove four nuts and washers holding the top portion of the auger screen to the bottom portion (see Figure 16).

F. Rotate bottom portion of the auger screen 180° and secure to top portion with four nuts and washers (see Figure 17).

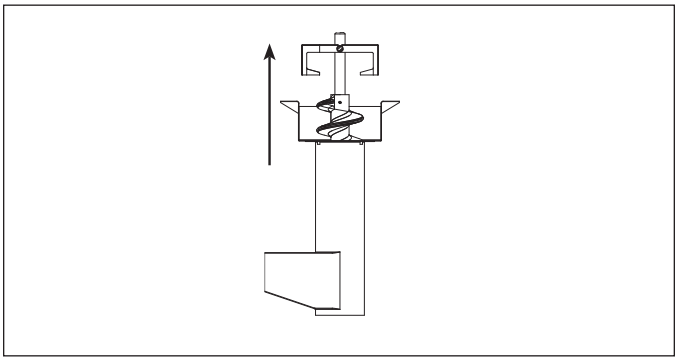

Figure 15.

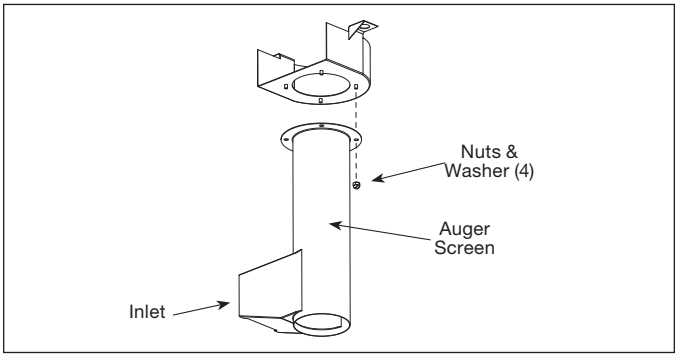

Figure 16.

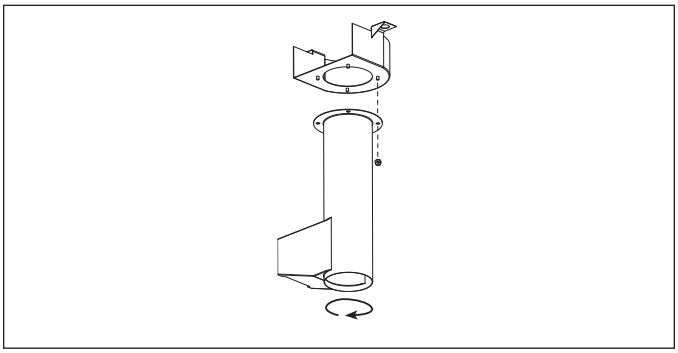

Figure 17.

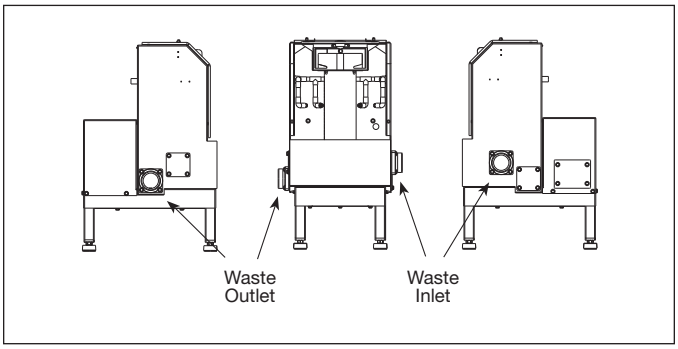

Figure 18.

WASTE OUTLET LINE

Connect a 2" drain line to the Waste Xpress waste outlet as specified per local codes (see Figure 18 for water outlet location).

InSinkErator recommends that the waste outlet empties into a floor drain.

If the waste outlet connection on the Waste Xpress needs to be switched to the other side, complete the following:

- Remove the four screws holding the cap and gasket in position (see Figure 18).
- Install gasket, cap and inlet fitting on reverse side and secure with appropriate screws.

NOTE: *The Waste Xpress system should not be plumbed directly into a small inside grease trap. The unit can be plumbed through a large exterior grease trap.*

PLUMBING CONNECTIONS

The syphon breaker is supplied with all Waste Xpress systems (packed separately).

Syphon breaker must be installed above the sink flood plane **per local plumbing codes**. Check direction of water flow arrows.

The solenoid valve is supplied with a 24 V coil.

- The flow control valve regulates all cold water flowing into the disposer and Waste Xpress. This conserves water and prevents overloading.

WATER SUPPLY CONNECTIONS

When connecting the incoming water supply to the disposer, sink bowl and Waste Xpress, use as few elbows and tees as possible.

All cold water line fittings are 1/2" NPT except the sink bowl nozzles which are 1/2" compression. Use 1/2" compression fitting to connect hot water to Waste Xpress.

Install the flow control valve, water solenoid valve, and syphon breaker according to the direction of the arrows marked on each valve body.

NOTE: *In-line hot and cold shutoff valves are recommended close to the Waste Xpress system for ease of service.*

ROUTING WATER FLOW

Connect cold water only to disposer, bowl, or trough.

Connect hot water only to Waste Xpress for hot water spray nozzles.

In a trough system, route all water flow to the end of the trough to flush food waste. It is also recommended to utilize both drain outlets.

NOTICE

PROPERTY DAMAGE

System has hot water spray that must be connected. Fresh water connection to the Waste Xpress must be hot water only. Failure to use hot water may clog system and result in malfunction.

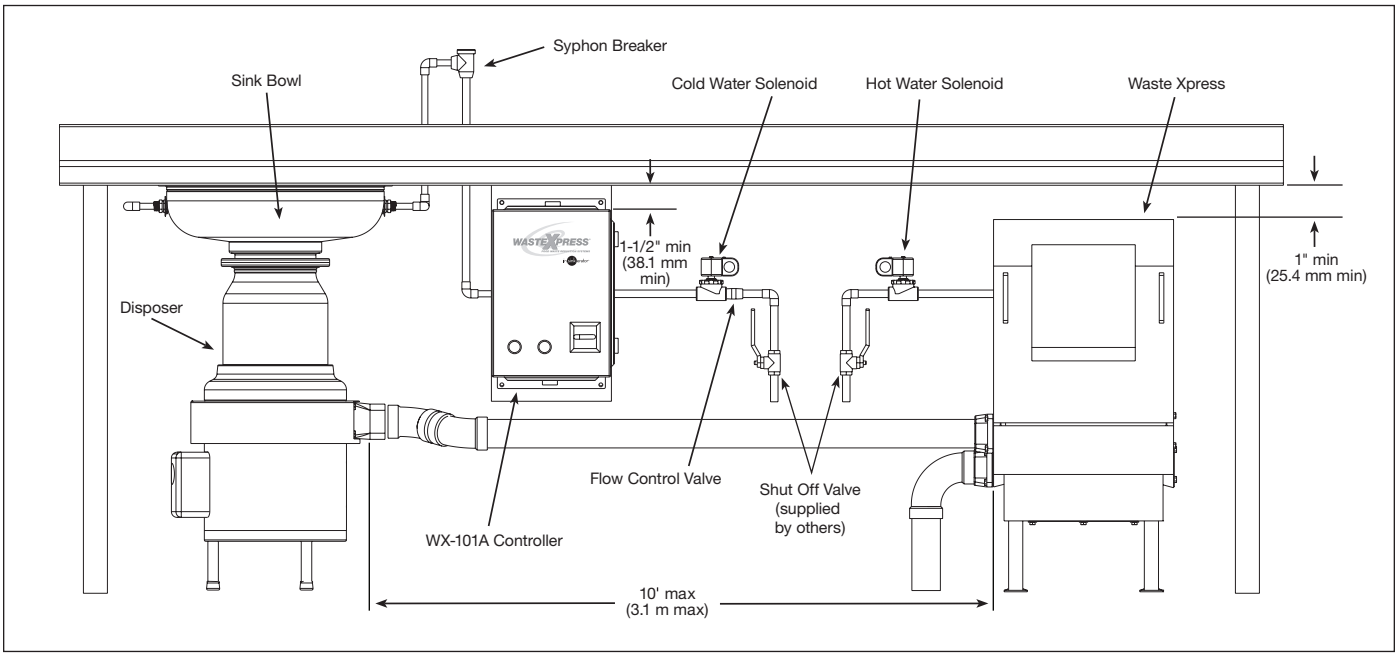

Figure 19. Typical Installation Diagram

⚠ WARNING

ELECTRICAL SHOCK

- Turn off all electrical supply to the disposer before attempting any work on it. Use a voltmeter or circuit tester to ensure that power is off.
- All Installation work must conform to local plumbing and electrical codes.
- All components (disposer, WX, control center and solenoids) must be carefully and permanently grounded.
- A properly fused disconnect must be installed at the electrical supply source for the control center.
- The control center's door disconnect must be in the off position before the panel door can be opened. Power is still present at the disconnect until power is turned off at the electrical supply source.

LINE VOLTAGE

Connect the incoming line power to the electrical disconnect switch and connect the disposer motor to labeled terminal blocks in the control center. Use the appropriate voltage and phase wiring diagram(s) in the Wiring Diagram section at the end of this manual. A wiring diagram is also located on the inside door of the control center. Wire the disposer motor for correct voltage using the connection diagram inside the motor terminal box.

LOW VOLTAGE

The WX-101A control center uses low voltage (24 V) to operate contactor coils, solid state control circuit, push buttons, and solenoid valves. Red wires denote a 24 V circuit.

NOTICE

PROPERTY DAMAGE

- Ensure that control center voltage and phase match the disposer motor and electrical supply. Check nameplates on disposer and control center for voltage and phase specifications.
- Refer to the control center wiring diagrams in this manual for correct connection.
- Use NEMA 4 watertight electrical connectors (not supplied) when making electrical connections to the control center.

COLD WATER SOLENOID VALVE

One 24 V cold water solenoid valve is supplied with control centers. Connect solenoid valve to terminals 4 and 13. Supplied flow control valve is to be connected to cold water line.

Wire per local electrical code using NEMA 4 water-tight electrical connections.

HOT WATER SOLENOID VALVE

One 24 V hot water solenoid valve is supplied with control centers. Connect solenoid valve to terminals 7 and 18. No flow control valve is to be used on hot water line. Use 1/2" compression fitting to connect hot water line to Waste Xpress.

⚠ WARNING

PERSONAL INJURY

Disconnect electricity at line disconnect switch before servicing system.

PRE-OPERATION TEST

Before operating the Waste Xpress complete the following steps to ensure the unit has been properly installed.

1. Ensure plumbing and electrical connections are secure.
2. Turn on incoming cold water supply to disposer and hot water supply to the Waste Xpress.
3. Check to make sure auger and screen are seated on auger drive hub, positioned correctly, and fasteners on upper bearing bracket are installed and engaged correctly prior to starting.
4. Ensure that the discharge chute is fitted securely in position.
5. Turn on incoming power to disposer and Waste Xpress.

NOTE: *Use of the electrical door disconnect knob on the WX-101A control panel will result in a 30 second delay before the system can be restarted. You must wait 30 seconds after reactivation of the line disconnect switch before system will restart.*

6. Push start button on the control center (see Figure 20). The WX-101A and disposer will run and cold water will flow into the disposer.
7. Observe auger rotation by looking up into discharge chute; auger should rotate clockwise (when viewed from above). See Figure 21.

NOTE: *If auger rotates counter-clockwise, turn off main power supply, wait 60 seconds, then restart. If auger continues to rotate counter-clockwise (when viewed from above), unit must be re-wired. Turn off main power. On three phase Waste Xpress interchange leads L1 and L2. Restart.*

8. Make sure cold water is flowing into disposer.
9. Make sure hot water to Waste Xpress spray nozzles is cycling. Factory set cycle is 10 seconds on and 2 minutes off.
10. Press stop button to stop disposer and Waste Xpress. Steam from chute should be evident.
11. Restart system and remove front cover/discharge chute. Waste Xpress and disposer should turn off automatically if interlock switch is functioning properly. Water will continue to flow into disposer.
12. Replace front cover/discharge chute and restart system.

⚠ WARNING

PERSONAL INJURY

If system does not shut down when front cover/discharge chute is removed, interlock may not be wired correctly. See Troubleshooting section for corrective action.

⚠ WARNING

ELECTRICAL SHOCK

Turn off electrical supply to Waste Xpress, control center and disposer before attempting to work on it. Test with a volt meter or circuit tester to insure that power is off.

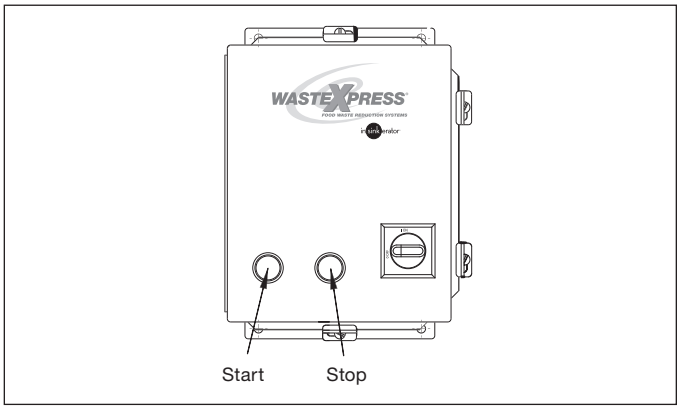

Figure 20.

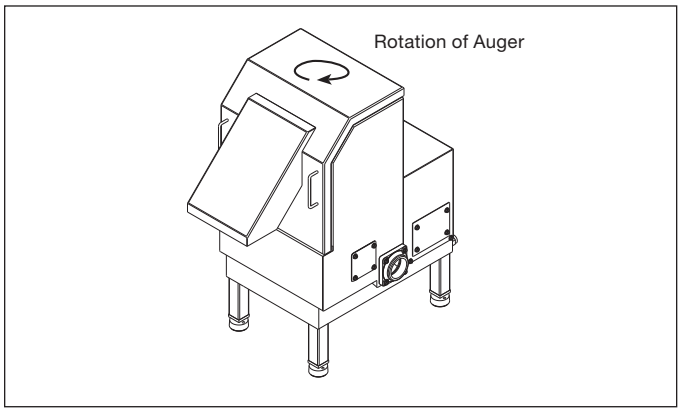

Figure 21.

TO START

1. Check to ensure disposer is free of foreign objects.
2. Ensure power is on.
3. Push start button. Disposer and Waste Xpress will run and water will flow into disposer

TO STOP

1. Push stop button. System will stop.
2. Water may continue to flow into disposer for up to 10 minutes, per the time set on the water shutoff delay timer. This post-flush clears the drain lines of food waste.

WATER SHUTOFF DELAY ADJUSTMENT

This water shutoff delay is adjustable from 30 seconds to 10 minutes (see Figure 23). Set water shutoff delay for at least 2 minutes on trough systems.

⚠ WARNING

PERSONAL INJURY

To adjust the water shutoff delay, disconnect the electrical power to the control panel and open the control center door.

Locate the water shutoff delay at the top of the printed circuit board in the WX-101A (see Figure 22). Set the dip switches for the desired water shut off delay. Use the guide printed on the circuit board to set minutes of delay (also see Figure 23). The dip switches should be moved to match the filled in areas of the guide.

NOTE: *Line disconnect should not be turned off between usage.*

AUTOMATIC TIMED DISPOSER SHUTOFF

This water saving feature allows the system to run for 10 minutes before it automatically shuts off and must be manually restarted.

NOTE: *This feature is set in the manual position at the factory. To activate the automatic timed system shutoff, disconnect the electric power to the control center, then open the control center door. Locate the Dip Switch Module at the top of the circuit board (see Figure 22). Move the #5 dip switch from MANUAL to AUTOMATIC. The system now automatically shuts off 10 minutes after it starts.*

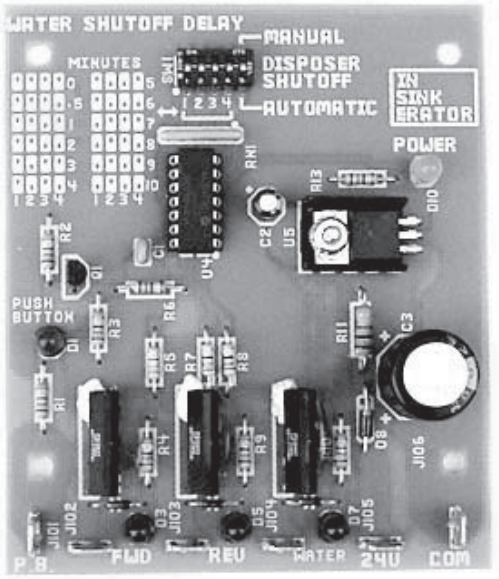

Figure 22.

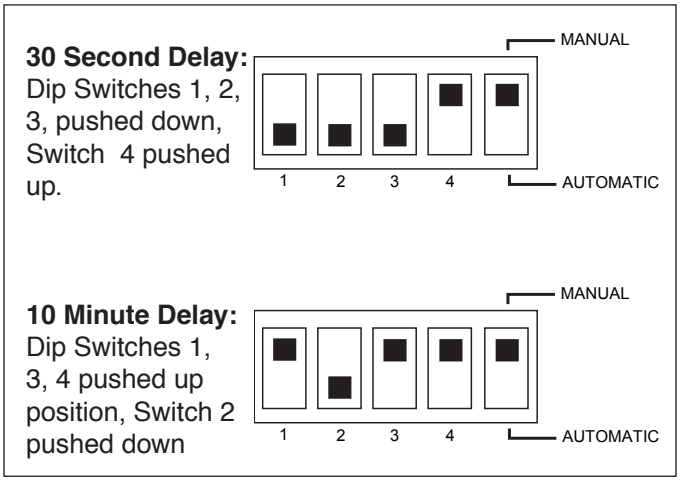

Figure 23. Time Delay Setting Examples

OPERATING WASTE XPRESS SYSTEM

1. Make sure there are no foreign objects in disposer grind chamber. Do not pre-load disposer with food waste prior to starting.
2. Place 10 gallon waste bin under discharge chute.
3. Push start button on control center. Waste Xpress and disposer will run and water will flow into disposer.
4. Feed food waste into disposer in a steady, continuous flow. Waste will exit discharge chute and drop into waste bin.

NOTE: *Once all waste has been fed into disposer, allow approximately 2 minutes for system to clear. This will allow system to flush itself prior to system shutdown.*

5. Press Stop button to stop system.

NOTICE

PROPERTY DAMAGE

Do not insert: string, metal, glass, cans, silverware, dishes, cloth napkins or large quantities of grease or oil into the disposer.

⚠ WARNING

PERSONAL INJURY

Do not dispose of hot liquids such as grease, oil and syrup into disposer.

OPERATIONAL TIPS

- Ensure a steady stream of cold water runs into the disposer while it is operating.
- Do not overload the disposer or turn it off with food waste inside the grind chamber (run the disposer and water for three minutes after the final load to flush away all food waste).
- Clean auger and auger screen, bearing bracket, and discharge chute daily by running through dishwasher.

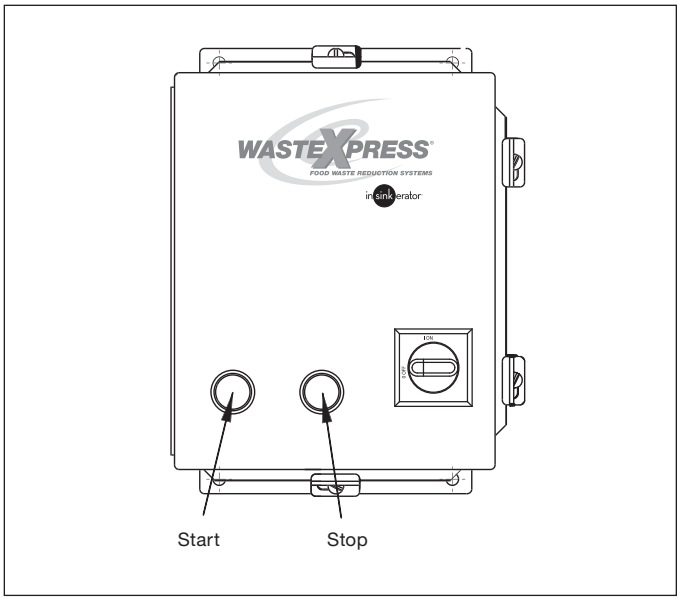

Figure 24.

⚠ DANGER

FIRE HAZARD

To minimize the possibility of fire, do not store flammable items near the disposer. Do not use or store gasoline or other flammable liquids near the disposer.

⚠ WARNING

PERSONAL INJURY

- To reduce the risk of injury from materials that may be expelled from the disposer grind chamber, ensure that the disposer baffle is properly installed.
- To prevent the ejection of food waste and to keep foreign materials out of the grind chamber, replace the splash baffle when it becomes worn.
- Do not put any of the following items into the disposer: clam or oyster shells, drain cleaner, glass, china, plastic wrap, large bones, metal objects, explosive materials, extremely hot water, grease, oil, or syrup.
- Turn the power off before attempting to clear a jam, remove an object, or press the reset button.
- Do not insert your fingers into the disposer. Use long-handled tongs or pliers to remove objects from the disposer.
- Loosen any jams with the dejamming bar.
- Be certain that all persons who will operate the disposer read the safety and operating instructions prior to operating the disposer.
- To prevent accidents, ensure that the disposer is turned off before your leave the area.

⚠ WARNING

PERSONAL INJURY

Wait until auger paddles stop before cleaning Waste Xpress.

1. Press stop button on control center to stop system (disposer & Waste Xpress).
2. Holding both handles remove discharge chute by tilting it upward (see Figure 25).
3. Remove auger-bearing bracket by sliding the two captive fasteners inward and then pull bracket upward (see Figure 26 and 27).
4. Lift auger and screen up and then out (see Figure 26).
5. Remove auger from screen by lifting it up and out (see Figure 28).
6. Rinse auger, screen, auger compartment and discharge chute. Auger, screen and discharge chute are dishwasher safe and should be washed daily. Flush inlet and outlet with a fresh water supply to keep the drain lines clean.
7. Install auger into screen then place screen over drive.
8. Ensure that the auger drops into position.
9. Secure bearing bracket with captive fasteners.
10. Install discharge chute by placing bottom, front portion in first and then tilting back and downward.

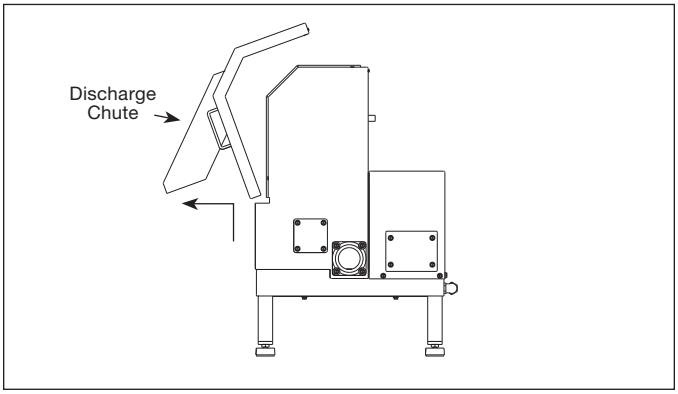

Figure 25.

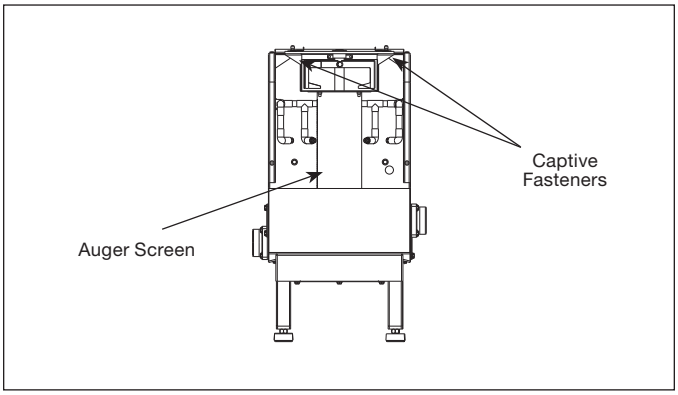

Figure 26.

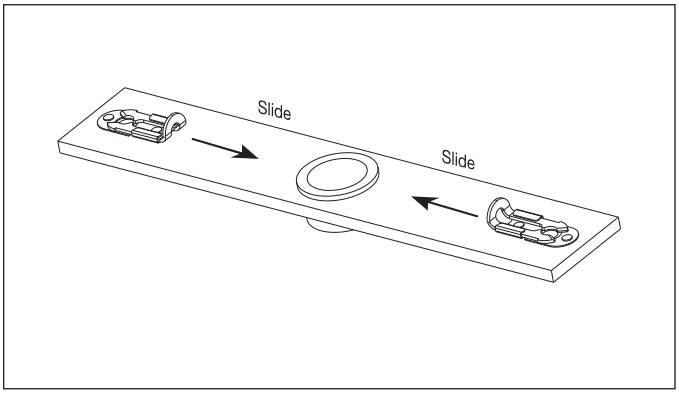

Figure 27. Bearing Bracket

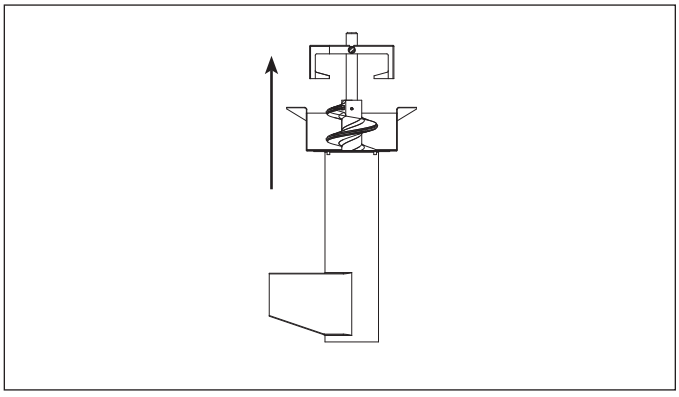

Figure 28.

⚠ WARNING

ELECTRICAL SHOCK

- Disconnect power before servicing.
- Do not bypass interlock switch.

⚠ WARNING

PERSONAL INJURY

Wait until auger paddles stop before servicing Waste Xpress.

Troubleshooting for problems other than what is listed below should be performed by a qualified service person. Troubleshooting performed by untrained personnel could result in electrical shock or damage to the Waste Xpress, disposer and/or Control Center.

SYSTEM TROUBLESHOOTING

PROBLEM	POSSIBLE CAUSE	SOLUTION
The Waste Xpress, disposer and water do not turn on.	• Electrical supply turned off.	• Turn on electrical supply.
	• Fuse blown or circuit breaker tripped at power supply.	• Replace fuse or reset circuit breaker.
	• Discharge chute of Waste Xpress not seated properly.	• Reinstall chute to ensure proper fit.
	• Waste blocking safety interlock.	• Remove waste from safety interlock.
	• Control circuit fuse (FNA2) blown.	• Replace fuse.
	• 24 V power from control center not present.	• Call for service.
	• Line Disconnect switch on control not in the "on" position.	• Turn to "on" position. Wait 15-20 seconds before attempting at starting system to allow control to perform "self test."
	• Line Disconnect switch on control is defective.	• Call for service.
	• Start switch on control center is defective.	• Call for service.
	• Stop switch on control center is defective.	• Call for service.
	• Dip switch settings on circuit board in control center may not be to specification.	• Call for service.
The disposer will not start or stops while grinding, but the Waste Xpress and water operate properly.	• The disposer overload protector tripped.	• Press stop button on control center and press red reset button on disposer. *Note: Button should be depressed until it "clicks." You may need to let disposer cool down before setting.*
	• The disposer jammed.	• Press stop button on control center and follow direction for dejamming (supplied with disposer).
The Waste Xpress, disposer and water appear to run however no solid waste is ejected from the discharge chute of the Waste Xpress.	• Auger is not sufficiently primed with waste after cleaning.	• Allow unit to run longer to prime itself.
	• Insufficient waste in waste line.	• Waste will exit when more waste is added.
	• Auger screen is not orientated correctly (discharge pan opening is facing back wall of cabinet - all waste is falling into cabinet and exiting unit via drain).	• Reverse auger screen orientation 180°. Pan opening must face front of machine and screen intake must fit over waste inlet on side of cabinet.
	• Auger turning in wrong direction.	• Three phase - switch leads L1 and L2.

SYSTEM TROUBLESHOOTING

PROBLEM	POSSIBLE CAUSE	SOLUTION
Water backs up into disposer (does not drain).	• The auger and screen plugged. • Auger not turning. • Plumbing line between disposer and Waste Xpress clogged.	• Remove plug. • Ensure that auger is seated properly and that auger belt in place. Check motor. • Remove clog.
Waste Xpress, disposer and water will start when "start" button is pushed but shuts down when start button is released.	• Insufficient time allowed after Line Disconnect switch on control center is turned to the "on" position • 24 V power from control center (control circuit) is low or not present. • Mechanical interlock on disposer reversing contactors is defective.	• Allow 15-20 seconds prior to attempting system start up (at start switch) after turning Line Disconnect switch to the "on" position. • Call for service. • Call for service.
Waste Xpress stops unexpectedly.	• Discharge chute misaligned. • Fuse blown or circuit breaker tripped at power source. • 24V power from control center (control circuit) is low or not present. • Operation mode on circuit board in control center is set for 10 minute automatic shutdown. • Stop button on control center has been pushed. • Line Disconnect switch has been turned to "off" position.	• Reinstall discharge chute to ensure proper fit. • Replace fuse or reset circuit breaker. • Call for service. • Call for service. • Push start button on control center. • Turn to "on" position. Wait 15-20 seconds before attempting at starting system to allow control to perform "self test". *Note: Line Disconnect switch is only intended for use in the event of control center servicing.*
Water exits Waste Xpress at front of cabinet.	• Drain line has clog. • High water level.	• Clear drain. • Add second waste outlet drain connect from Waste Xpress cabinet to sewer connection (recommended for trough applications). • Verify system has 5 gpm flow control and shut off valve installed. Install if missing.
Waste Xpress does not run, but disposer and water run.	• Contactor defective. • Waste Xpress overload will not reset. • Auger motor defective.	• Call for service. • Call for service. • Call for service.
Disposer and Waste Xpress will not start, but cold water runs.	• Incoming power to WX-101A is miswired.	• Verify/correct - 3 incoming power leads from breaker panel must be connected to L1-L3 on incoming side of Line Disconnect Switch.

SYSTEM TROUBLESHOOTING

PROBLEM	POSSIBLE CAUSE	SOLUTION
No water spraying onto auger screen.	• Solenoid valve clogged. • Water turned off. • Solenoid valve defective. • Spray nozzles clogged. • Timer defective. • Timer not set properly. • Solenoid valve installed incorrectly.	• Remove clog. • Turn on water. • Call for service. • Replace nozzles. • Call for service. • Call for service. • Reinstall solenoid valve so arrow is pointing in correct direction.
Water flows continuously before controls are turned on.	• Solenoid valve is stuck open. • Solenoid valve installed incorrectly. • Solenoid valve is wired incorrectly. • Timer is defective. • Timer is not set properly. • Solenoid valve is defective. • Post flush setting in control center is not correct.	• Call for service. • Reinstall the water solenoid valve with the arrow on the valve pointing in the direction of the water flow. • Call for service. • Call for service. • Call for service. • Replace solenoid valve. • Call for service.
Overload protector trips frequently.	• Disposer is overloaded with food waste.	• Do not overload disposer with excessive amounts of food waste.
Cold water shuts off when Waste Xpress shuts off.	• System being shut down using Line Disconnect switch on control center. • Post Flush settings on circuit board in control center are not to specification.	• Use stop and start push buttons. Line Disconnect switch is only de-activated when system maintenance is required. • Call for service.

DISPOSER TROUBLESHOOTING

PROBLEM	CAUSE	SOLUTION
Disposer motor will not start and water does not flow.	• No incoming line power.	• Turn line power on.
	• Line disconnect switch is not on.	• Turn line disconnect to "on" position. Wait 15-20 seconds before attempting to start system to allow control to perform "self test."
	• Line disconnect switch has been reactivated and 30-second delay has not yet expired.	• Wait 30 seconds and try starting again.
	• Line Disconnect switch on control is defective.	• Call for service.
	• Start switch on control is defective.	• Call for service.
	• Stop switch on control is defective.	• Call for service.
	• Dip switch settings on circuit board in control center may not be to specification.	• Call for service.
	• Control circuit fuse FNA2 is blown.	• Replace fuse.
	• 24 V power from control center (control circuit) is low or not present.	• Call for service.
Disposer does not reverse direction.	• Control center has been reactivated before post-flush delay has expired.	• Wait until post-flush is complete and try again.
Disposer motor stops while grinding but water continues to flow.	• Control center wired for automatic shut-off.	• Press start button. If disposer runs for 10 minutes then shuts off, the automatic shutoff is active. If the manual setting is desired, change indicated in the feature section.
	• Disposer is jammed.	• Press stop button and follow directions for dejamming in disposer installation manual.
	• Disposer motor overload protector has tripped.	• Press stop button. Locate red reset button on front of disposer electrical cover. Press to reset. If motor had been running, wait five minutes for the motor and overload to cool down.
Disposer will not start but water flows.	• Overload protector on the disposer may have tripped.	• Press stop button. Locate red reset button on front of disposer electrical cover. Press to reset. If motor had been running, wait five minutes for the motor and overload to cool down.
	• Disposer is jammed.	• Press stop button and follow directions for dejamming that were supplied with the disposer.
Water flows constantly before start button is pushed.	• Water solenoid valve is installed backward.	• Water flow should be in the direction of the arrow on valve.
Overload trips frequently.	• Disposer overloaded.	• Do not overload disposer with excess amounts of garbage and water.

WASTE XPRESS TROUBLESHOOTING

PROBLEM	POSSIBLE CAUSE	SOLUTION
Auger runs in counterclockwise (CCW) direction.	• Power to auger motor reversed.	• Reverse motor leads to auger motor or switch L1 and L2 connections on Waste Xpress terminal block. Auger must run in clockwise direction.
Unit does not shut off with cover off of Waste Xpress unit.	• Waste Xpress Interlock not operating properly.	• Check interlock switch #3 and #95 connections on WX-101A to Waste Xpress. • Call for service.
Hot water spray is cold.	• Incorrectly plumbed. • No hot water.	• Connect solenoid on Waste Xpress unit to hot water source. • Ensure hot water heater/source is functioning.
Hot water spray does not work.	• Incorrectly wired.	• Check connections on WX-101A #7 to WX #18.
Auger reverses direction on each re-start.	• Waste Xpress unit auger motor has been wired into disposer motor circuit.	• Re-wire as shown in instructions.
Waste Xpress unit will not start.	• Incorrect wiring. • Misaligned Interlock switch on chute. • Safety interlock switch is defective.	• Check wiring. • Check chute for tight fit. • Call for service.
Water shuts off when unit shuts off.	• Improper dip switch setting (circuit board).	• Refer to Page 16 to refer to dip switch setting instructions.
Repetitive "hammering" sound coming from Waste Xpress unit while running – no waste exiting unit at discharge chute.	• Auger has become plugged – system has either been "batch fed" or auger drive system has failed. Waste buildup causing auger to malfunction – not engaging with auger drive correctly.	• Shut system down and clean unit. Determine cause of plug.
Waste line clogs between disposer and Waste Xpress unit.	• System is being "batch fed." • System is being shut down prematurely - not being allowed to properly clear itself of waste. • Auger and screen not being cleaned properly. Waste build up has hardened and created a clog over time. • Auger is running in wrong rotation. • Lack of cold water flowing through system. • Waste mix has a high fiberous content (stringy food waste and/or cardboard).	• Feed waste at a moderate and even rate – do not attempt to process high volume all at one time. • Allow system to run 3-5 minutes before shutting the sytem down to clear itself. • Disassemble and clean the Waste Xpress unit a minimum of once per day. • Call for service. • Increase water flow to 5 gpm. • Card board cannot be processed. Fiberous food waste should be balanced into the waste mix with other food waste products

WASTE XPRESS TROUBLESHOOTING

PROBLEM	POSSIBLE CAUSE	SOLUTION
Waste Xpress unit is extremely wet.	• Excessive moisture in waste being processed or high volume of liquids being processed through system.	• Slow down feed rate of waste to disposer while processing. • Do not process large volumes of watery waste by itself - balance waste mix with other types of food waste and/or disposables
	• No flow control valve in cold water line – full line flow from source being directed to system.	• Call for service.
Water (non-vapor) exiting discharge chute while system is running.	• High grease content in waste mix. Build-up on screen is not being cleaned sufficiently and is causing a "chimney" to form. Hot water spray cycle "on" time is insufficient to keep screen clean affecting water drainage.	• Call for service.
Processed waste is draining from cabinet at outlet to sewer – no waste exiting Waste Xpress unit at discharge chute.	• Auger is running in wrong rotation. • Auger screen pan is facing back of machine – processed waste falling into base of cabinet and exiting at outlet.	• Call for service. • Reverse auger screen (see Cleaning Instructions section on page 17).

If the Waste Xpress remains inoperative after following this troubleshooting guide, contact InSinkErator's service department at 1-800-845-8345 for the location of the nearest approved service agency.

Waste Xpress 208/240V, 3Phase System Wiring Diagram

⚠ WARNING

ELECTRICAL SHOCK

- Turn off the electrical supply to the disposer before attempting any work on it. Use a voltmeter or circuit tester to ensure that power is off.
- Installation must conform to local electrical codes.
- All components (disposer, WX, control center and solenoids) must be carefully and permanently grounded.
- A properly fused disconnect must be installed at the electrical supply source for the control center.

NOTICE

PROPERTY DAMAGE

- Ensure that the control center voltage and phase match the disposer motor and electrical supply. Check nameplates on disposers and control centers for voltage and phase specification.
- The disposer motor wiring connection is shown in the disposer terminal box.

Note: • Red wires = Low voltage (24 V) control.
• Black wires = Line voltage (208 - 240 V) control.

WX-101A-5
208/240 V
3-phase

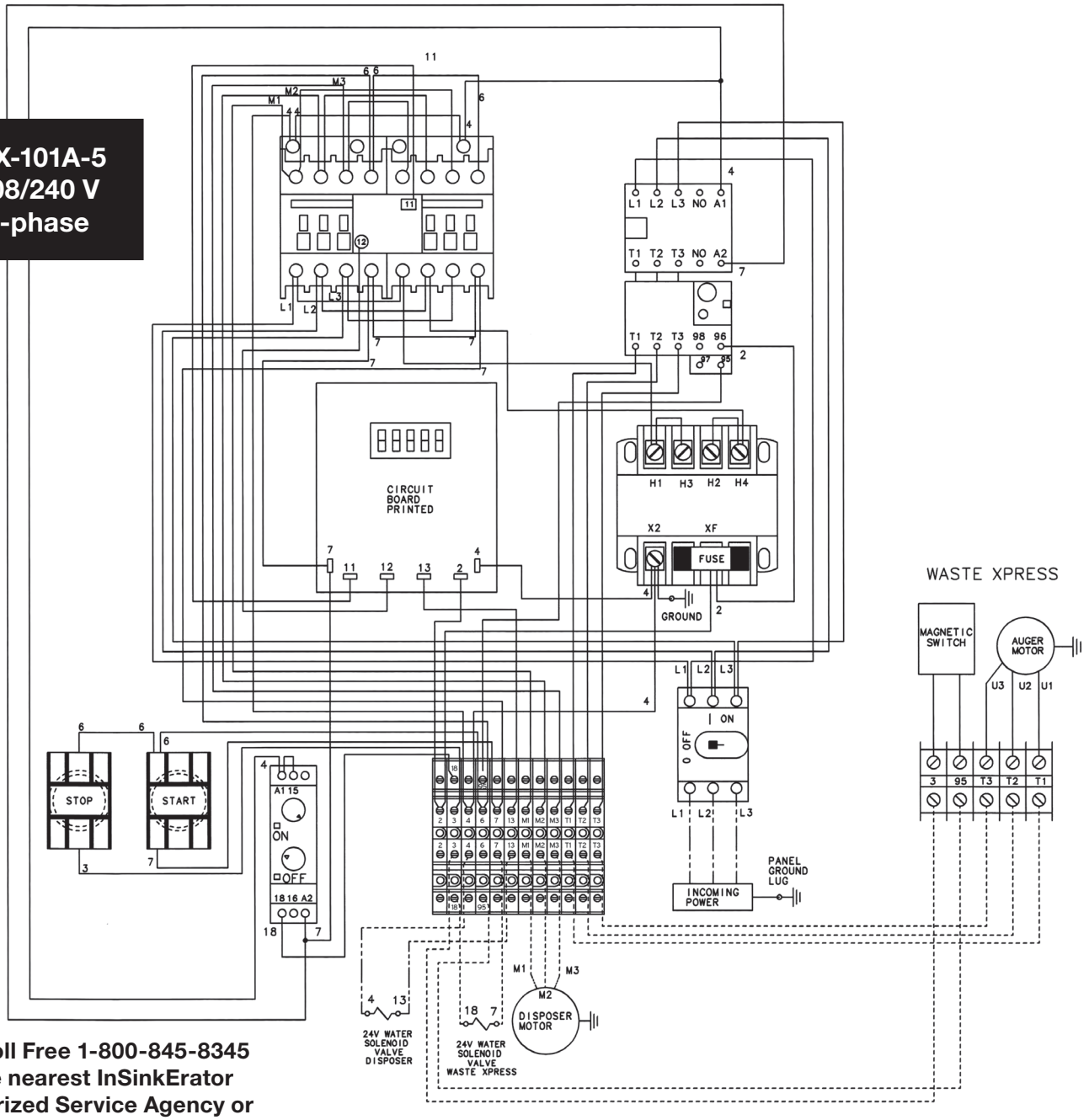

Call Toll Free 1-800-845-8345 for the nearest InSinkErator Authorized Service Agency or to reach Technical Support.

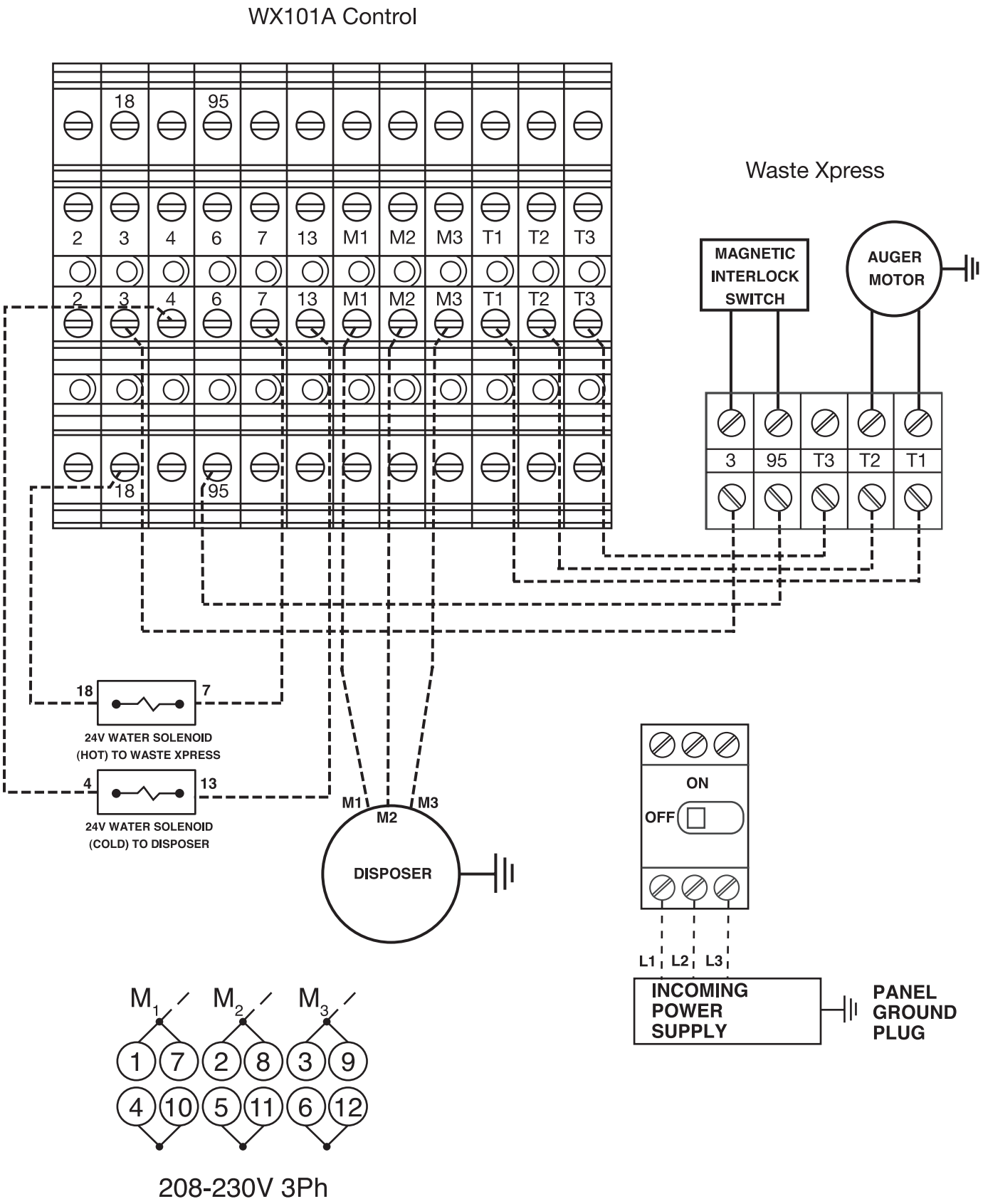
WX101A Control
18
95
2
3
4
6
7
13
M1
M2
M3
T1
T2
T3
Waste Xpress
MAGNETIC INTERLOCK SWITCH
AUGER MOTOR
3
95
T3
T2
T1
18
7
24V WATER SOLENOID
(HOT) TO WASTE XPRESS
4
13
24V WATER SOLENOID
(COLD) TO DISPOSER
M1
M2
M3
DISPOSER
ON
OFF
L1
L2
L3
INCOMING POWER SUPPLY
PANEL GROUND PLUG
M1
M2
M3
1
7
2
8
3
9
4
10
5
11
6
12
208-230V 3Ph

Waste Xpress 380/460V, 3Phase System Wiring Diagram

⚠ WARNING

ELECTRICAL SHOCK

- Turn off the electrical supply to the disposer before attempting any work on it. Use a voltmeter or circuit tester to ensure that power is off.
- Installation must conform to local electrical codes.
- All components (disposer, WX, control center and solenoids) must be carefully and permanently grounded.
- A properly fused disconnect must be installed at the electrical supply source for the control center.

NOTICE

PROPERTY DAMAGE

- Ensure that the control center voltage and phase match the disposer motor and electrical supply. Check nameplates on disposers and control centers for voltage and phase specification.
- The disposer motor wiring connection is shown in the disposer terminal box.

Note: • Red wires = Low voltage (24 V) control.
• Black wires = Line voltage (380 - 460 V) control.

WX-101A-6
380/460 V
3-phase

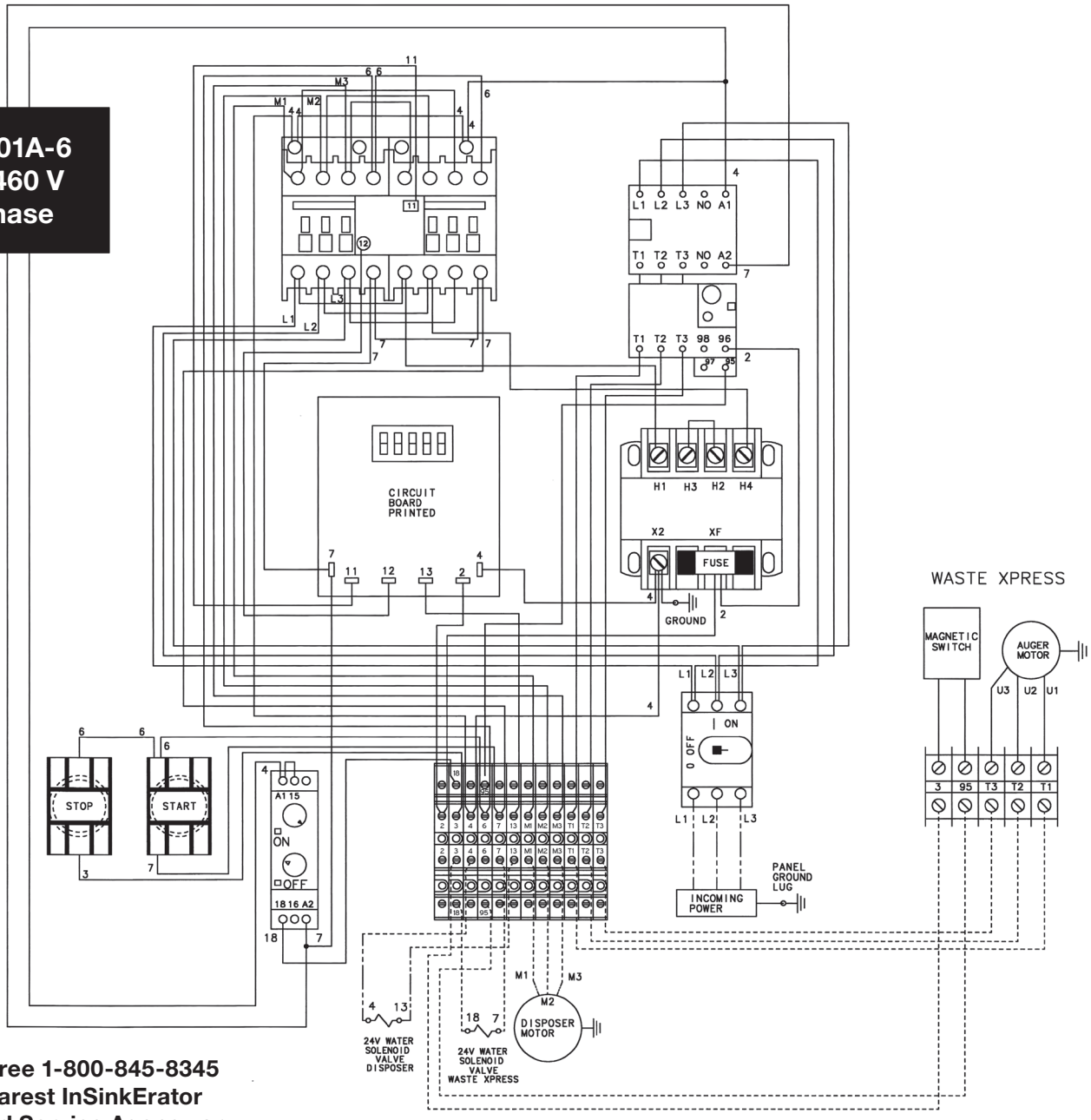

Call Toll Free 1-800-845-8345 for the nearest InSinkErator Authorized Service Agency or to reach Technical Support.

WX-101A-6 380/460V 3Phase Electrical Connections

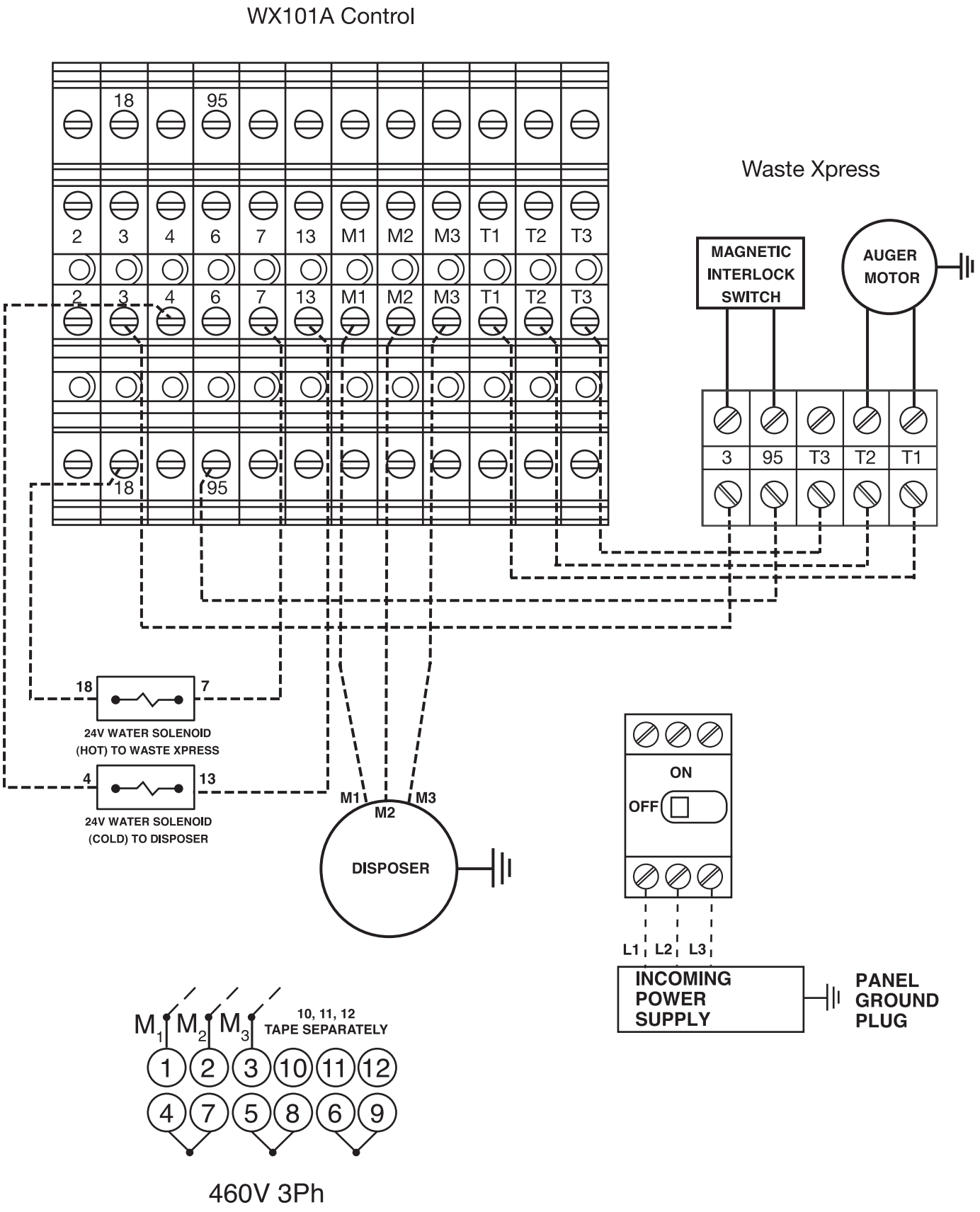

Limited Warranty

InSinkErator® (**"InSinkErator"** or **"Manufacturer"** or **"we"** or **"our"** or **"us"**) warrants to the original purchaser only ("Customer" or "you" or "your"), subject to the exclusions below, that your InSinkErator® (the **"InSinkErator Product"**) will be free from defects in material and workmanship for one year from the original date of purchase (the **"Warranty Period"**). This limited warranty terminates if the original purchaser transfers the InSinkErator Product to any other person or entity.

What is Covered

This limited warranty includes repair or replacement of your InSinkErator Product, accessories if included in the original InSinkErator Product package, and all replacement parts and labor costs if provided by an authorized InSinkErator service representative.

What is not Covered

This limited warranty does not extend to and expressly excludes:

- Losses or damages or the inability to operate your InSinkErator Product resulting from conditions beyond the Manufacturer's control including, without limitation, accident, alteration, misuse, abuse, neglect, or negligence (other than Manufacturer's).
- Wear and tear expected to occur during the normal course of use, including without limitation, cosmetic rust, scratches, dents or comparable and reasonably expected losses or damages.
- Failure to install, maintain, assemble, or mount the InSinkErator Product in accordance with Manufacturer's instructions or local electrical and plumbing codes, faulty or improper electrical installation, faulty or improper plumbing installation, clogged drain lines, or an improperly sized unit (as specified by InSinkErator).

What we will do to Correct Problems

To file a warranty claim during the Warranty Period, you may call Toll Free 1-800-845-8345 for the nearest InSinkErator Authorized Service Agency or to reach Technical Support, or you may visit our website at www.insinkerator.com.

The following information must be provided as part of your warranty claim: your name, address, phone number, your InSinkErator Product model and serial number. You will be required to submit supporting documentation of the date of purchase.

Manufacturer or its authorized service representative will determine, in its sole and absolute discretion, if your InSinkErator Product is covered under this limited warranty. Only an authorized InSinkErator service representative may provide warranty service. InSinkErator is not responsible for warranty claims arising from work performed on your InSinkErator Product by anyone other than an authorized InSinkErator service representative.

If a covered claim is made during the Warranty Period, Manufacturer will, through its authorized service representative, and at Manufacturer's or its authorized service representative's sole discretion, either repair or replace your InSinkErator Product. If your InSinkErator Product is replaced, the warranty on the replacement InSinkErator Product will be limited to the unexpired term remaining in the original Warranty Period. **YOUR SOLE AND EXCLUSIVE REMEDY UNDER THIS LIMITED WARRANTY SHALL BE LIMITED TO REPAIR OR REPLACEMENT OF THE INSINKERATOR PRODUCT.** This limited warranty is valid only in the United States and applies only when the InSinkErator Product is used in the country in which it was purchased. If outside the 50 United States, contact your authorized InSinkErator dealer to determine whether any warranty applies.

No Other Express Warranty Applies

THE LIMITED WARRANTIES PROVIDED ABOVE ARE THE SOLE AND EXCLUSIVE WARRANTIES PROVIDED BY MANUFACTURER TO THE ORIGINAL PURCHASER, AND ARE IN LIEU OF ALL OTHER WARRANTIES, WRITTEN OR ORAL, EXPRESS OR IMPLIED, WHETHER ARISING BY OPERATION OF LAW OR OTHERWISE, INCLUDING, WITHOUT LIMITATION, WARRANTIES OF MERCHANTABILITY OR FITNESS FOR A PARTICULAR PURPOSE, WHETHER OR NOT THE PURPOSE HAS BEEN DISCLOSED AND WHETHER OR NOT THE INSINKERATOR PRODUCT HAS BEEN SPECIFICALLY DESIGNED OR MANUFACTURED FOR YOUR USE OR PURPOSE.

Limitation of Liability

TO THE EXTENT PERMITTED BY LAW, IN NO EVENT SHALL MANUFACTURER OR ITS AUTHORIZED SERVICE REPRESENTATIVES BE LIABLE FOR ANY INCIDENTAL, SPECIAL, INDIRECT, OR CONSEQUENTIAL DAMAGES, INCLUDING ANY ECONOMIC LOSS, WHETHER RESULTING FROM NONPERFORMANCE, USE, MISUSE OR INABILITY TO USE THE INSINKERATOR PRODUCT OR THE MANUFACTURER'S OR ITS AUTHORIZED SERVICE REPRESENTATIVE'S NEGLIGENCE. MANUFACTURER SHALL NOT BE LIABLE FOR DAMAGES CAUSED BY DELAY IN PERFORMANCE AND IN NO EVENT, REGARDLESS OF THE FORM OF THE CLAIM OR CAUSE OF ACTION (WHETHER BASED IN CONTRACT, INFRINGEMENT, NEGLIGENCE, STRICT LIABILITY, OTHER TORT OR OTHERWISE), SHALL MANUFACTURER'S LIABILITY TO YOU EXCEED THE PRICE PAID BY THE ORIGINAL OWNER FOR THE INSINKERATOR PRODUCT.

The term "consequential damages" shall include, but not be limited to, loss of anticipated profits, business interruption, loss of use or revenue, cost of capital or loss or damage to property or equipment.

Some states do not allow the exclusion or limitation of incidental or consequential damages, so the above limitation may not apply to you. This warranty gives you specific legal rights and you may also have other rights which vary from state to state.

InSinkErator® may make improvements and changes in the specification at any time, in its sole discretion, without notice or obligation and further reserves the right to change or discontinue models.
©2023 InSinkErator®. All rights reserved.