PROJECT: _____ **ITEM NO.:** _____

WASTE FLANGE OUTLET

FLANGE CREATES SALES OPPORTUNITIES:

- This flange reduces a three-inch waste line down to a two-inch line.
- Sell larger units to customers with two-inch waste lines.
- Replace competitive units with larger InSinkErator® units to customers with two-inch waste lines.
- InSinkErator still recommends that you use a three-inch waste line whenever possible for larger units.
- To order, specify Part #13847.



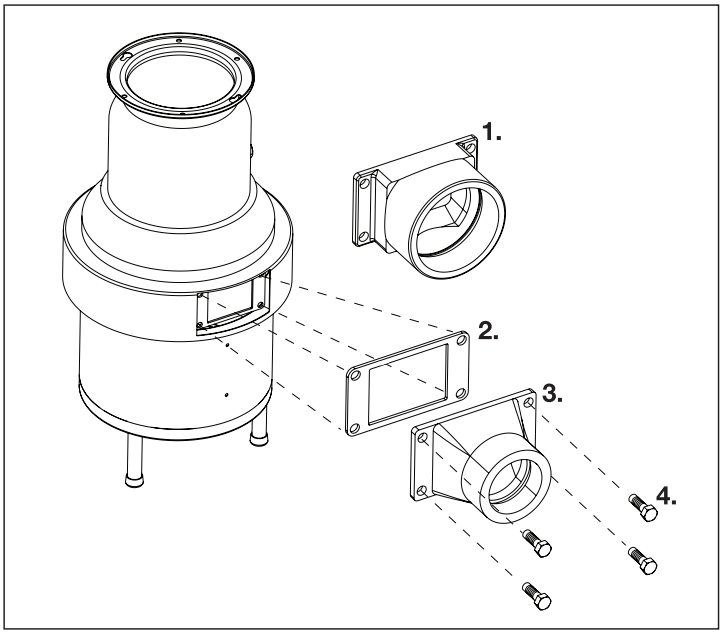

INSTALLATION INSTRUCTIONS:

1. Remove three-inch flange that comes standard with new 3, 5, 7 1/2 and 10 HP InSinkErator disposers, being careful not to damage the bolts or gasket. You'll need these to install the new flange.
2. Insert gasket between two-inch flange and the new disposer as shown in illustration.
3. Install two-inch flange, (Part #13847). Be sure to position with part number facing upward as shown in illustration.
4. Secure flange to disposer using the existing bolts.

Nos produits apparaissent dans le ***The KCL CADalog***
Des renseignements supplémentaires sont offerts par **Kochman Consultants, Ltd.** à www.kclcad.com.

1250 International Dr.
Mount Pleasant, WI 53177
TEL: 800-845-8345

www.insinkerator.com/foodservice

InSinkErator ©2023 Printed in USA Form No. F198-23D-45-10