FOODSERVICE DISPOSER
Installation Manual



⚠ WARNING WARNING indicates a hazardous situation which, if not avoided, could result in death or seious injury.

⚠ CAUTION CAUTION indicates a hazardous situation which, if not avoided, could result in minor or moderate injury.

NOTICE NOTICE is used to address practices related to physical injury

Please be certain that the person who installs or uses this appliance carefully reads and understands the Safety Instructions contained in this manual.

Table of Contents

Introduction
- Introduction 4
- Clean the Drain Line 4
- Typical Installation 4
- Required Tools/Materials 4
- Instructions Pertaining to Risk of Fire, Electrical Shock, or Injury to Persons..... 5

Installing the Disposer
- Disposer Mounting 6

Standard InSinkErator Mountings
- Sink Bowl Mounting Assemblies 7

Special InSinkErator Mountings 7

Plumbing Connections
- Drain Line Connections 8
- Water Supply Connections 8
- Routing Water Flow..... 8

Standard Motor Connection Wiring Diagrams 9

Electrical Connections
- Electrical Connections 10
- Disposer Controls 10

Operating Instructions
- Operating the Disposer 11
- Grinding Tips 11

Troubleshooting 12

Warranty 16

INTRODUCTION

The InSinkErator Foodservice food waste disposer is UL® and cUL® Listed when installed in conjunction with InSinkErator mounting adaptors and controls (see Figure 1 for typical installation).

See Table 1 (page 6) for the approved disposer/ mounting adaptor combinations.

Important – These installation instructions are for the benefit of the installing contractor. InSinkErator and/or InSinkErator Factory Authorized Service Centers do not make original installations. For technical information not covered in these instructions, contact the supplier, an InSinkErator Field Sales Representative, or InSinkErator Foodservice Sales and Service at 1-800-845-8345.

CLEAN THE DRAIN LINE

With a drain line auger, clear away all hardened waste material in the horizontal drain pipe running from the drain trap to the main waste line.

TYPICAL INSTALLATION

A typical Foodservice disposer installation incorporates the following connections (see Figures 1 and/or 9):

- Water shut off valve
- Syphon breaker
- Solenoid valve
- Start/stop switch (Control Center)
- Sink or trough
- Flow control valve

REQUIRED TOOLS/MATERIALS

The following items are needed to install the disposer:

- Screwdriver
- Adjustable wrench
- Pipe wrench
- Wire nuts
- 7/16" nut driver

The following items may be needed to install the disposer:

- Plumbing putty
- Hacksaw
- Drain auger

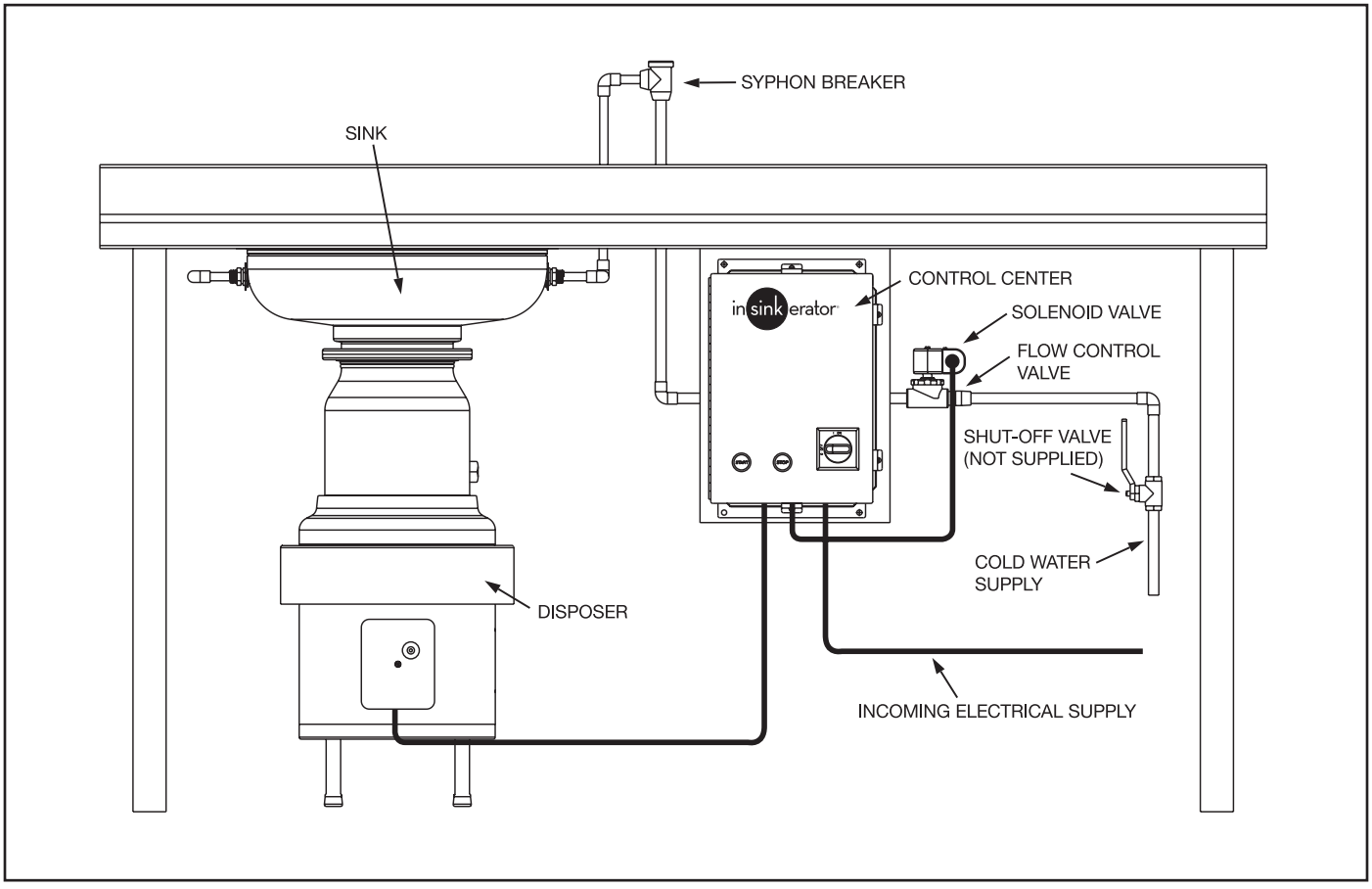

Figure 1. Typical Installation

INSTRUCTIONS PERTAINING TO RISK OF FIRE, ELECTRIC SHOCK, OR INJURY TO PERSONS

IMPORTANT SAFETY INSTRUCTIONS

⚠ WARNING

PERSONAL INJURY/PROPERTY DAMAGE

If the electrical installer is not experienced in electrical installation, we recommend seeking competent professional assistance. Disposer or accessory damage due to improper installation is not covered under warranty. All installations must comply with local electrical codes.

⚠ WARNING

PERSONAL INJURY

- Food waste disposers are designed to grind and dispose of normal food waste. Inserting materials or items other than food waste into the disposer could cause personal injury and/or disposer damage.
- To reduce the risk of injury from materials that may be expelled from the disposer grind chamber, ensure that the disposer baffle is properly installed.
- To prevent the ejection of food waste and to keep foreign materials out of the grind chamber, replace the splash baffle when it becomes worn.
- Do not put any of the following items into the disposer: clam or oyster shells, drain cleaner, glass, china, plastic wrap, large bones, metal objects, explosive materials, extremely hot water, grease, oil, or syrup.
- Turn the power off before attempting to clear a jam, remove an object, or press the reset button.
- Do not insert your fingers into the disposer. Use long-handled tongs or pliers to remove objects from the disposer.
- Loosen any jams with the dejamming bar.
- Be certain that all persons who will operate the disposer read the safety and operating instructions prior to operating the disposer.
- To prevent accidents, ensure that the disposer is turned off before you leave the area.

⚠ WARNING

FIRE HAZARD

To minimize the possibility of fire, do not store flammable items near the disposer. Do not use or store gasoline or other flammable liquids near the disposer.

NOTICE

PROPERTY DAMAGE

- Disposers shipped from factory are not wired for a specific voltage. Refer to the motor connection wiring diagram in the terminal box for voltage instructions.
- Ensure the disposer motor voltage and phase match that of the electrical supply.
- The disposer motor wiring connection is shown in the disposer terminal box.

GROUNDING INSTRUCTIONS

⚠ WARNING

ELECTRICAL SHOCK

- All control centers and disposers must be grounded.
- A properly fused disposer control (with a marked “off” position) that disconnects all ungrounded supply conductors must be installed at the electrical supply source.
- Turn off the electrical supply to the disposer before installing/servicing. Test the circuit with a voltmeter or circuit tester to ensure the power is off.
- Installation must confrom to all local electrical codes.
- Be careful not to pinch or damage the electrical wires when installing the terminal box.
- Do not reconnect electrical current at main service panel until proper grounds are installed.

⚠ WARNING

ELECTRICAL SHOCK

- Disconnect the electrical supply before servicing the disposer.
- Ensure the disposer and controls are properly grounded.

SAVE THESE INSTRUCTIONS

⚠ WARNING

PERSONAL INJURY

- For safe operation, install the disposer in compliance with the minimum distance illustrated in Figure 2.
- Disposer must be properly installed to prevent serious injury from moving shredder part.

NOTICE

PROPERTY DAMAGE

To avoid excess vibration, InSinkErator recommends a minimum countertop thickness of 16 gage stainless steel.

DISPOSER MOUNTING

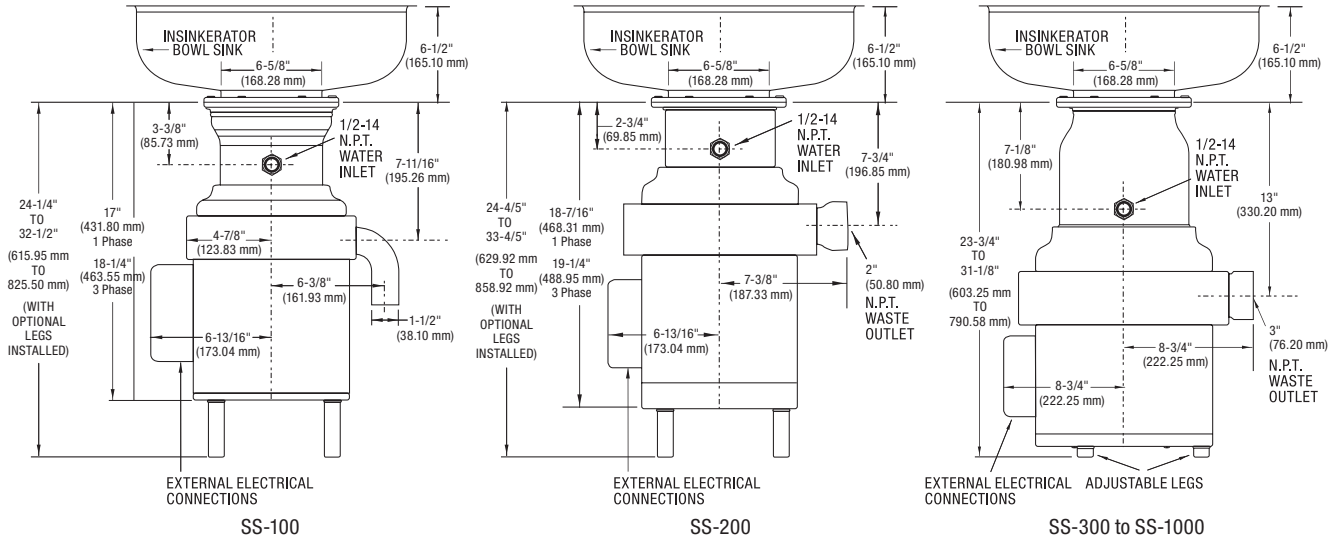

NOTE: *Minimum 1" (25.4 mm) clearance required between bottom of disposer and floor for all 3 models.*

Figure 2. Distance from Table Top to Mounting Flange

Standard InSinkErator Mountings

SINK BOWL MOUNTING ASSEMBLIES

1. Place the mounting flange (1) over the existing collar adaptor connection lip or sink bowl flange (this may require some force).
2. Push the mounting flange up out of the way and fit the groove in the mounting gasket (2) onto the connection lip. Make sure the gasket is fully seated on the flange.
3. Push the mounting flange down over the mounting gasket, fitting the threaded mounting flange fasteners into the recesses in the top of the mounting gasket.
4. From the bottom, insert two screws through opposite sides of the flat gasket (3) and mounting flange, into the threaded fasteners in the existing flange. The flat gasket is used only in the #6 mounting assembly. The screws should protrude about 1/4 inch below the mounting gasket.
5. Position the disposer beneath the mounting gasket and raise it to engage the two protruding screws in the disposer body flange keyhole slots. Secure the remaining screws and position the disposer correctly for the plumbing connections. For SS200-SS1000 disposers, adjust the legs to support the disposer.

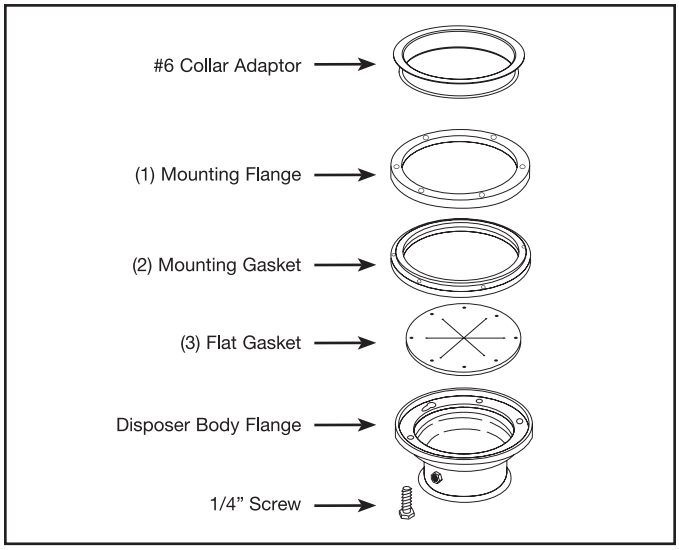

Figure 4. #6 Mounting Assembly

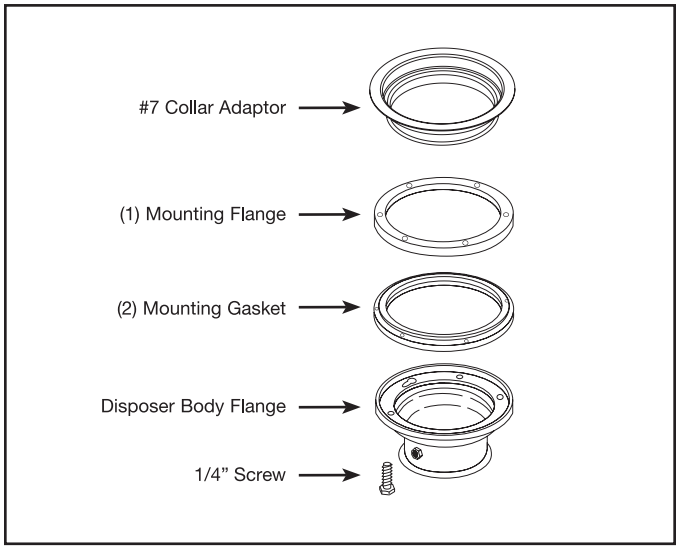

Figure 5. #7 or Sink Bowl Mounting Assembly

Special InSinkErator Mountings

When installing an InSinkErator Foodservice disposer to any other mounting configurations, a special mounting adaptor kit is required. The special mountings are described in the Mounting Adaptor Selection Guide (for more information, call 1-800-845-8345, or go to www.insinkerator.com). Figures 6-8 show examples of non-InSinkErator sinks. (Mounting instructions are included in each special mounting adaptor kit.)

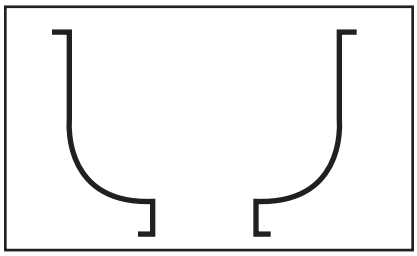

Figure 6. Outward Flange

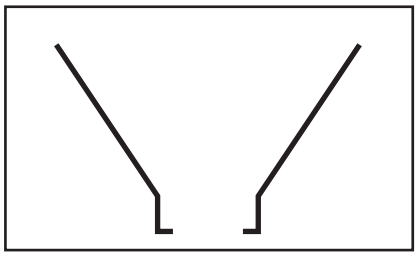

Figure 7. Inward Flange

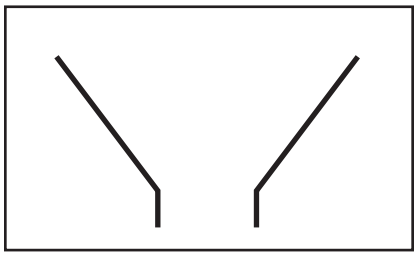

Figure 8. Straight Flange

NOTICE

PROPERTY DAMAGE

These plumbing instructions were written for an experienced competent installer. If the installer is not experienced in plumbing installation, InSinkErator recommends that competent professional assistance is sought. Damage to the disposer or accessories as a result of improper installation is not covered under warranty. All installations must comply with local plumbing codes.

DRAIN LINE CONNECTIONS

To allow easy access to overload reset button, the disposer plumbing should be connected with the electrical control box facing the operator.

When connecting the drain line, place the “P-trap” as close to the disposer outlet flange as possible. Do not connect the drain line to a grease trap, interceptor, or drum trap.

All horizontal runs should be as short as possible, with a minimum fall of 1/4 inch per foot.

WATER SUPPLY CONNECTIONS

When connecting the disposer to the incoming water supply, use as few elbows and tees as possible. Connect to the cold water line only. All water line fittings are 1/2" NPT except the sink bowl nozzles (1/2" compression).

Install the flow control valve, water solenoid valve, and the syphon breaker according to the direction of the flow arrows marked on each valve body (see Figure 9).

NOTE: *A syphon breaker must be installed above the sink flood plane per local plumbing codes.*

ROUTING WATER FLOW

- In a trough system, route all water flow to the end of the trough to flush food waste.
- In a sink bowl system route all water through the sink bowl.
- Table 2 provides Recommended Cold Water Flow and Drain Line Diameter.

Disposer	Standard Flow Control GPM (LPM)	Optional Flow Control GPM (LPM)	Drain Line Diameter
SS-100	5 (19)	3 (11)	1-1/2"
SS-200	7 (26)	5 (19)	2" NPT
SS-300	8 (30)	7 (26)	3" NPT
SS-500	8 (30)	7 (26)	3" NPT
SS-1000	10 (38)	N/A	3" NPT

Table 2. Recommended Cold Water Flow and Drain Line Diameter

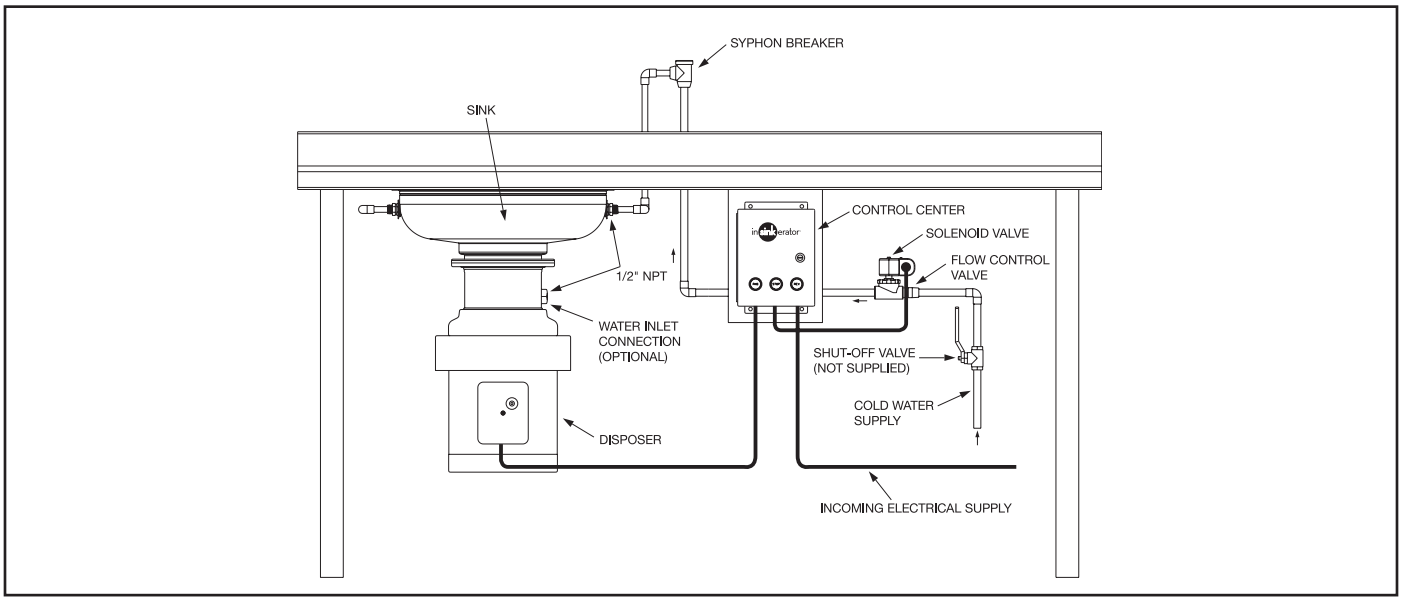

Figure 9. Installation Diagram

Standard Motor Connection Wiring Diagrams

NOTE: *The diagrams below show standard motor connection wiring for a manual switch operation. For alternate controls, please refer to the control panel installation manual.*

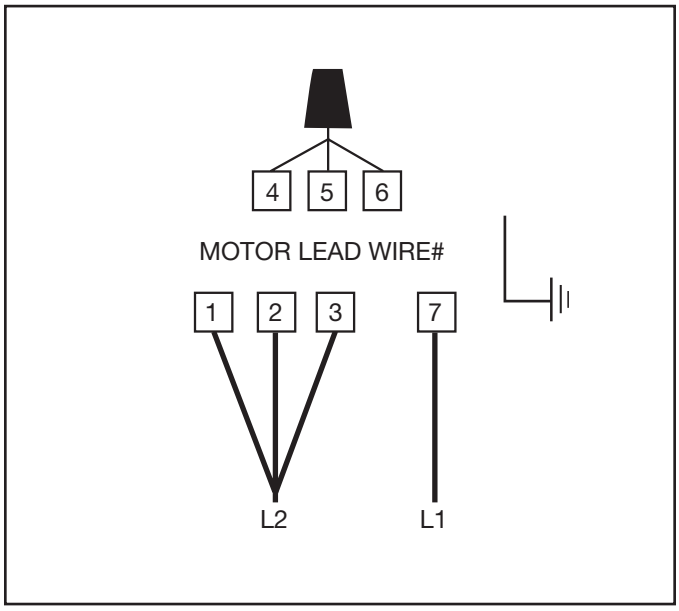

Figure 10. Incoming 115V Single Phase Line Power

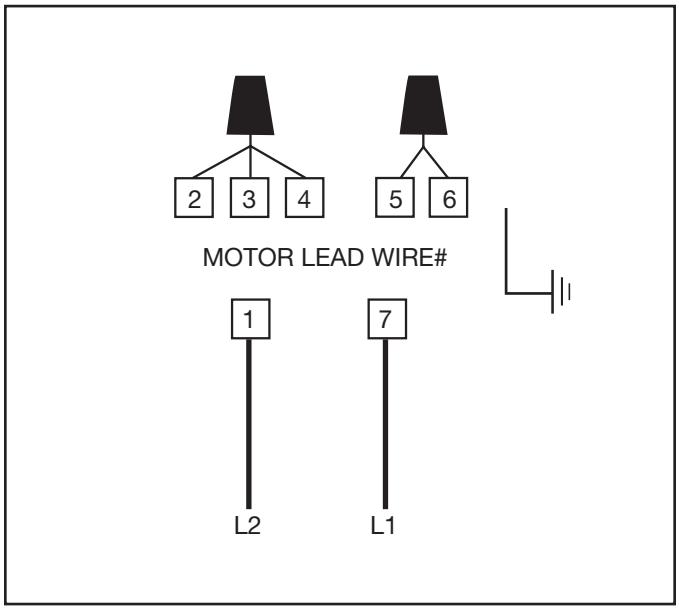

Figure 11. Incoming 208-230V Single Phase Line Power

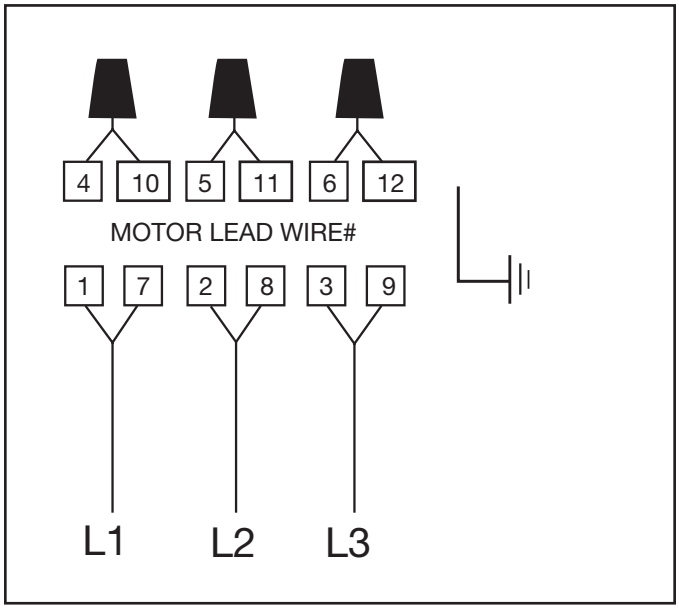

Figure 12. Incoming 208-230V Three Phase Line Power

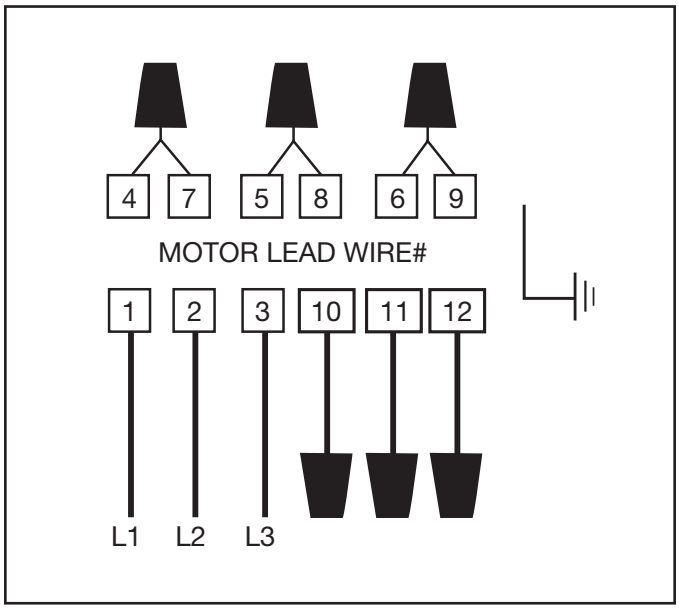

Figure 13. Incoming 460V Three Phase Line Power

⚠ WARNING

ELECTRICAL SHOCK

- Turn off the electrical supply to the disposer before servicing. Test the circuit with a voltmeter or circuit tester to ensure the power is off.
- Installation must conform to all local electrical codes.
- All control centers and disposers must be grounded.
- A properly fused disposer control (with a marked "off" position) that disconnects all ungrounded supply conductors must be installed at the electrical supply source.

⚠ WARNING

PERSONAL INJURY/PROPERTY DAMAGE

If the electrical installer is not experienced in electrical installation, we recommend seeking competent professional assistance. Disposer or accessory damage due to improper installation is not covered under warranty. All installations must comply with local electrical codes.

NOTICE

PROPERTY DAMAGE

- Disposers shipped from the factory are not wired for a specific voltage. Refer to the motor connection wiring diagram in the terminal box for voltage instructions.
- Ensure the disposer motor voltage and phase match that of the electrical supply.
- The disposer motor wiring connection is shown in the disposer terminal box.

ELECTRICAL CONNECTIONS

To connect the disposer to the electricity:

1. Remove the screw in the center of the disposer terminal box.
2. Pull the terminal box out of the stainless steel trim shell.
3. Connect an electrical conduit connector to the hole in the bottom of the exposed wiring compartment.
4. Connect the ground wire to the ground screw.
5. Connect the incoming wires to the motor leads. Make sure the wiring connections are the same as those on the electrical connection diagrams (see page 10).

⚠ WARNING

ELECTRICAL SHOCK

Be careful not to pinch or damage the electrical wires when installing the terminal box.

6. Reinstall the terminal box cover on the trim shell.
7. Test the disposer to ensure the cutting elements revolve and the water flows automatically. Make sure the disposer is securely mounted and does not leak from any of the connections.

NOTES:

- *Pressure switches may be connected across the line at 5 horsepower or less. Large horsepower motors require connection in the pilot circuit of a magnetic starter.*
- *The magnetic and manual starters supplied by InSinkErator do not require heaters to complete the circuit. InSinkErator disposers are equipped with overload protectors.*
- *A time delay may only be used with a water solenoid valve.*

OPERATING THE DISPOSER

1. Make sure there are no foreign objects in the disposer grind chamber. Do not pre-load the disposer with food waste prior to starting.
2. Push the start button on the control switch. The disposer will run and water will flow into the disposer.
3. Feed food waste into the disposer in a steady, continuous flow.
4. When all food waste is flushed away, push the stop button on the control switch.

NOTE: *The Manual Reversing Switch uses three-button operation (FWD/STOP/REV) to manually change disposer grind direction. The disposer will rotate in the direction of the button pushed. DO NOT restart disposer until the rotating shredder has come to a stop.*

GRINDING TIPS

- Ensure that a steady stream of cold water runs into the disposer while it is operating (see Table 2 on page 9 for the recommended cold water flow).
- Do not overload the disposer or turn it off with food waste inside the grind chamber. Run the disposer and water for three minutes after the final load to flush away all food waste.

NOTICE

PROPERTY DAMAGE

Do not pre-load food waste into disposer before turning on. Pre-loading disposer with food waste can cause excessive strain and may loosen disposer mounting components, resulting in disposer separating from sink or trough.

Troubleshooting

⚠ WARNING

ELECTRICAL SHOCK

Disconnect power before servicing.

Troubleshooting for problems other than what is listed below should be performed by a qualified service person. Troubleshooting performed by untrained personnel could result in electrical shock or damage to the disposer. Disconnect power before servicing.

PROBLEM	POSSIBLE CAUSE	SOLUTION
Disposer will not start and water does not flow.	• No incoming water. • Electrical disconnect switch has been reactivated and 30-second delay has not yet expired.	• Turn on electrical supply. • Wait 30 seconds and try starting again.
Disposer will not start but water flows.	• Disposer overload protector is tripped. • Disposer is jammed.	• Turn control to off position and press red reset button on disposer. • Turn control to off position and complete following steps: 1. Insert dejamming wrench (not supplied) slot down through sink opening. Place slot over raised bars found on top of rotating shredder. 2. Twist dejamming wrench back and forth to free jam. Rotating shredder should revolve freely when jam is released. 3. Remove all foreign materials. 4. Allow disposer to cool for 3-5 minutes after it stops running. Press red reset button to reset overload protector. Never strike reset button with objects. 5. If disposer remains inoperative after following these steps, contact nearest InSinkErator Factory Authorized Service Center (call 1-800-845-8345 to find Service Center nearest you).
Disposer motor stops while grinding, but water continues to flow.	• Disposer is jammed. • Disposer overload protector is tripped.	• See “Disposer is jammed,” above. • Turn control to off position and press red reset button on disposer. If disposer was running, allow unit to cool 3-5 minutes before pressing red reset button. Never strike reset button with objects.
Water flows continuously before controls are turned on.		• Reinstall water solenoid valve with arrow on valve pointing in direction of the water flow.
Overload protector trips frequently.	• Disposer is overloaded with food waste.	• Do not overload disposer with excessive amounts of food waste.

Notes

Limited Warranty

InSinkErator® (**"InSinkErator"** or **"Manufacturer"** or **"we"** or **"our"** or **"us"**) warrants to the original purchaser only ("Customer" or "you" or "your"), subject to the exclusions below, that your InSinkErator® (the **"InSinkErator Product"**) will be free from defects in material and workmanship for one year from the original date of purchase (the **"Warranty Period"**). This limited warranty terminates if the original purchaser transfers the InSinkErator Product to any other person or entity.

What is Covered

This limited warranty includes repair or replacement of your InSinkErator Product, accessories if included in the original InSinkErator Product package, and all replacement parts and labor costs if provided by an authorized InSinkErator service representative.

What is not Covered

This limited warranty does not extend to and expressly excludes:

- Losses or damages or the inability to operate your InSinkErator Product resulting from conditions beyond the Manufacturer's control including, without limitation, accident, alteration, misuse, abuse, neglect, or negligence (other than Manufacturer's).
- Wear and tear expected to occur during the normal course of use, including without limitation, cosmetic rust, scratches, dents or comparable and reasonably expected losses or damages.
- Failure to install, maintain, assemble, or mount the InSinkErator Product in accordance with Manufacturer's instructions or local electrical and plumbing codes, faulty or improper electrical installation, faulty or improper plumbing installation, clogged drain lines, or an improperly sized unit (as specified by InSinkErator).

What we will do to Correct Problems

To file a warranty claim during the Warranty Period, you may call Toll Free 1-800-845-8345 for the nearest InSinkErator Authorized Service Agency or to reach Technical Support, or you may visit our website at www.insinkerator.com.

The following information must be provided as part of your warranty claim: your name, address, phone number, your InSinkErator Product model and serial number. You will be required to submit supporting documentation of the date of purchase.

Manufacturer or its authorized service representative will determine, in its sole and absolute discretion, if your InSinkErator Product is covered under this limited warranty. Only an authorized InSinkErator service representative may provide warranty service. InSinkErator is not responsible for warranty claims arising from work performed on your InSinkErator Product by anyone other than an authorized InSinkErator service representative.

If a covered claim is made during the Warranty Period, Manufacturer will, through its authorized service representative, and at Manufacturer's or its authorized service representative's sole discretion, either repair or replace your InSinkErator Product. If your InSinkErator Product is replaced, the warranty on the replacement InSinkErator Product will be limited to the unexpired term remaining in the original Warranty Period. **YOUR SOLE AND EXCLUSIVE REMEDY UNDER THIS LIMITED WARRANTY SHALL BE LIMITED TO REPAIR OR REPLACEMENT OF THE INSINKERATOR PRODUCT.** This limited warranty is valid only in the United States and applies only when the InSinkErator Product is used in the country in which it was purchased. If outside the 50 United States, contact your authorized InSinkErator dealer to determine whether any warranty applies.

No Other Express Warranty Applies

THE LIMITED WARRANTIES PROVIDED ABOVE ARE THE SOLE AND EXCLUSIVE WARRANTIES PROVIDED BY MANUFACTURER TO THE ORIGINAL PURCHASER, AND ARE IN LIEU OF ALL OTHER WARRANTIES, WRITTEN OR ORAL, EXPRESS OR IMPLIED, WHETHER ARISING BY OPERATION OF LAW OR OTHERWISE, INCLUDING, WITHOUT LIMITATION, WARRANTIES OF MERCHANTABILITY OR FITNESS FOR A PARTICULAR PURPOSE, WHETHER OR NOT THE PURPOSE HAS BEEN DISCLOSED AND WHETHER OR NOT THE INSINKERATOR PRODUCT HAS BEEN SPECIFICALLY DESIGNED OR MANUFACTURED FOR YOUR USE OR PURPOSE.

Limitation of Liability

TO THE EXTENT PERMITTED BY LAW, IN NO EVENT SHALL MANUFACTURER OR ITS AUTHORIZED SERVICE REPRESENTATIVES BE LIABLE FOR ANY INCIDENTAL, SPECIAL, INDIRECT, OR CONSEQUENTIAL DAMAGES, INCLUDING ANY ECONOMIC LOSS, WHETHER RESULTING FROM NONPERFORMANCE, USE, MISUSE OR INABILITY TO USE THE INSINKERATOR PRODUCT OR THE MANUFACTURER'S OR ITS AUTHORIZED SERVICE REPRESENTATIVE'S NEGLIGENCE. MANUFACTURER SHALL NOT BE LIABLE FOR DAMAGES CAUSED BY DELAY IN PERFORMANCE AND IN NO EVENT, REGARDLESS OF THE FORM OF THE CLAIM OR CAUSE OF ACTION (WHETHER BASED IN CONTRACT, INFRINGEMENT, NEGLIGENCE, STRICT LIABILITY, OTHER TORT OR OTHERWISE), SHALL MANUFACTURER'S LIABILITY TO YOU EXCEED THE PRICE PAID BY THE ORIGINAL OWNER FOR THE INSINKERATOR PRODUCT.

The term "consequential damages" shall include, but not be limited to, loss of anticipated profits, business interruption, loss of use or revenue, cost of capital or loss or damage to property or equipment.

Some states do not allow the exclusion or limitation of incidental or consequential damages, so the above limitation may not apply to you. This warranty gives you specific legal rights and you may also have other rights which vary from state to state.

InSinkErator® may make improvements and changes in the specification at any time, in its sole discretion, without notice or obligation and further reserves the right to change or discontinue models.
©2023 InSinkErator®. All rights reserved.