PROJECT: _____ **ITEM NO.:** _____

POWERRINSE™ WASTE COLLECTION SYSTEM

The PowerRinse® Waste Collection System is a food waste handling solution that improves kitchen efficiency by increasing pre-rinse/scrapping speed and reducing bulk waste without grinding. It is an alternative to food waste disposer or pulper systems.

PRODUCT FEATURES & SPECIFICATIONS

1 YEAR ON-SITE PARTS & LABOR WARRANTY

PRE-RINSE & SCRAP DISHES IN ONE STEP

- Operating cycle requires only 1 GPM (3.79 LPM) of fresh water
- Capable of recirculating water up to 70 GPM (264.98 LPM)
- Pump operational in 70 seconds – protected against dry operation
- Scrap basket features ¼" (6.35 mm) diameter screen and ergonomic handles
- Collected solids can be disposed of into a waste or compost receptacle
- Basket cover designed to keep silverware and small dishes out of scrap basket

SYSTEM OVERVIEW

- Tray, base assembly, basket cover, pump housing and pump impeller all made from durable, corrosion-resistant stainless steel construction
- NEMA 4X stainless steel electrical control box
- High impact polymer scrap basket
- ¾ HP Pump safeguarded by ¼" (6.35 mm) inlet screen and dry-start protection
- Fits under standard table – minimum height 33" (838 mm)
- Flanged feet allow unit to be secured to floor

TIMED RUN OR CONTINUOUS RUN

- Built-in shut off timer automatically shuts off system after predetermined length of time (factory set at 20 minutes)
- System can be manually shut off at any time

CLEANING

- Quick and easy to clean – dishwasher safe components



Trough (Model PRT)
Ø19.10" Tray
(Ø485.14 mm)

MOUNTINGS/TRAY SIZES

☐  Trough, Ø19.10" Tray (Ø485.14 mm)

ELECTRICAL SPECIFICATIONS

☐ 110-120V, 60 Hz, 1 Ph, 8.2 amps, **CUL**
☐ 208/220-240V, 60 Hz, 1 Ph, 3.0/4.1 amps, **CUL**
☐ 208/220-240V, 60 Hz, 3 Ph, 3.2/3.0 amps, **CUL**
☐ 460-480V, 60 Hz, 3 Ph, 1.5 amps, **CUL**

ACCESSORIES

All systems include:
1 Scrap basket and 1 Basket Cover

☐  Additional Scrap Basket
☐  Additional Basket Cover
☐  Cover
☐  Rack Guide
☐  Trough Nozzle Assembly
☐  Diffuser Assembly
☐  Magnetic Silver Saver
☐  Remote Start/Stop

Our products appear on **The KCL CADalog**
More information is available from
Kochman Consultants, Ltd. at www.kclcad.com

insinkerator
1250 International Drive
Mount Pleasant, WI 53177
TEL: 800-845-8345

www.insinkerator.com/foodservice

c UL us LISTED ISO 9001 QUALITY SYSTEMS CERTIFIED

InSinkErator ©2023 Printed in USA Form No. F502-23C-83-85

SYSTEM COMPONENTS

Includes the following (see Figures 1 and 2):

a. Trough Tray
b. Scrap Basket
c. Diffuser Assembly
    d. Ball Valve
e. Waste Collector Base Assembly
    f. Waste Collector Tank and Mounting Assembly
    g. Control (Pre-wired)
    h. Solenoid (Pre-wired)
    i. Pump (Pre-wired)
    j. Air Gap
    k. Leveling Flange Feet
    l. 2" Drain Discharge
    m. 1/2" NPT Water Inlets (Hot and Cold Connections)
n. Installation, Care, and Use Manual
o. Mounting Hardware
    - Lock Washers (12)
    - 1/4"-20 Nuts (12)
p. Basket Cover

Accessories:

q. Trough Nozzle Assembly
    r. Ball Valve
s. Cover
t. Rack Guide

Required for installation:

- ☐ Screwdriver
- ☐ Pipe wrench
- ☐ 7/16" wrench or socket
- ☐ Tools and materials necessary to install the power line, drain line, and the hot and cold water
- ☐ 1/2" wrench or socket (*OPTIONAL* – if repositioning the control)

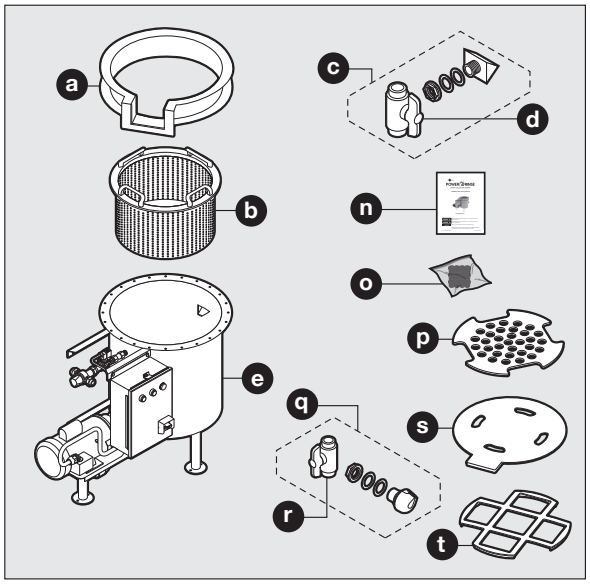

Figure 1. System Components

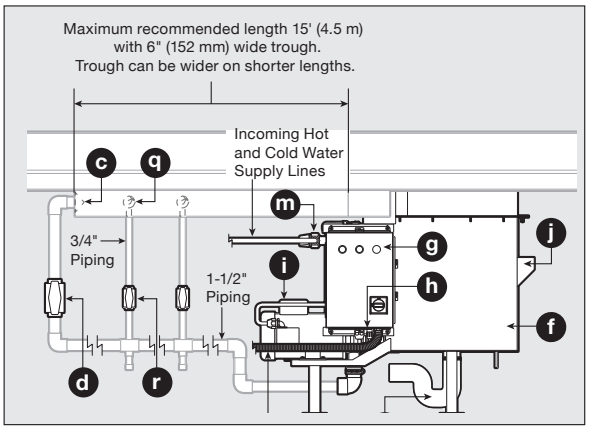

Figure 2. Typical Installation

SYSTEM DIMENSIONS

NOTICE

The PowerRinse® Waste Collection System pump motor fan must have a minimum of 1" of clearance from any wall or obstruction in order to operate correctly.

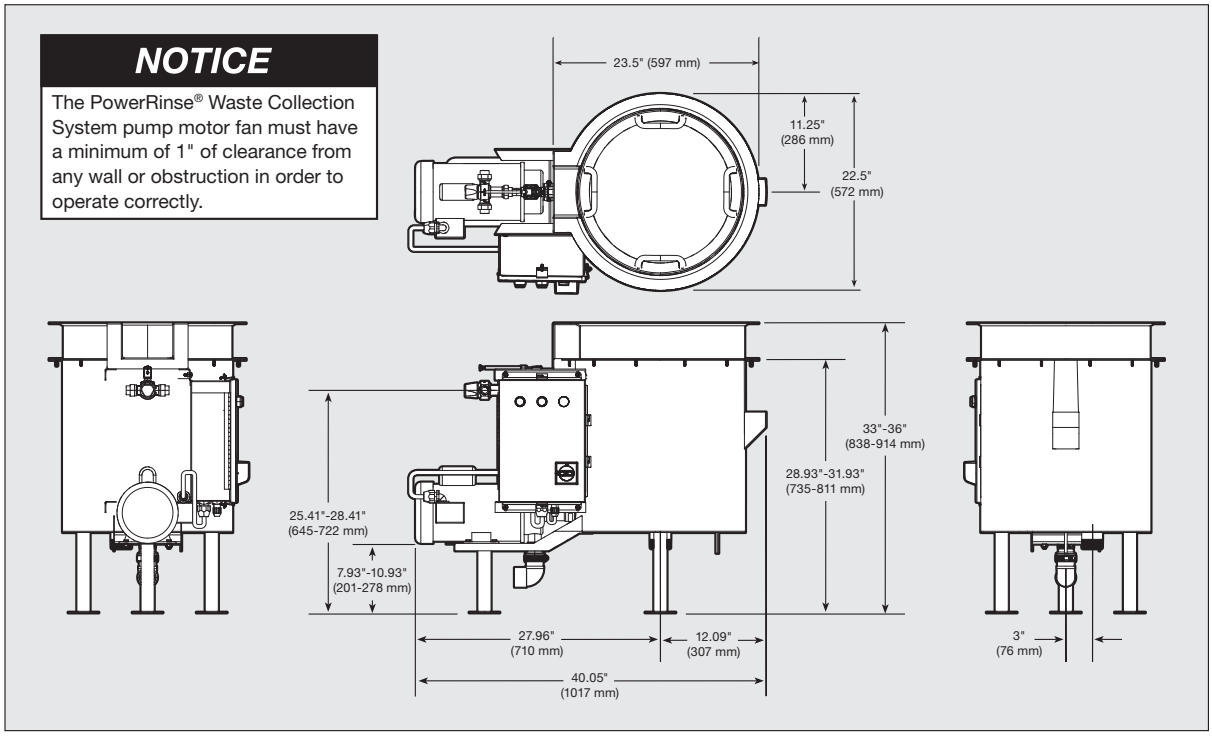

Figure 3. PowerRinse® Waste Collection System Dimensions

TABLE CUTOUT DIMENSIONS

Use the dimensions from Figure 4 for Trough (Model PRT) table cutout. Weld the waste collector tray to the underside of the table so the opening aligns with the trough in the table. Note trough width may vary, but trough end must match flange detail for welding.

- If using in-line with a dishwasher, it is recommended to mount the waste collector tray a minimum of 24" (609.6 mm) away from the loading end of the dishwasher to allow enough table space for a dish rack.

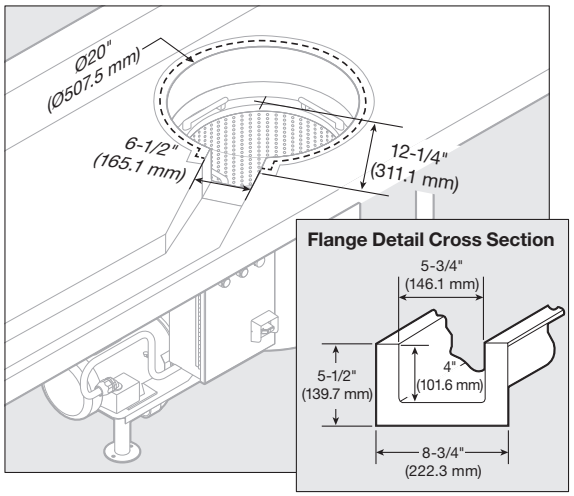

Figure 4. Table Cutout

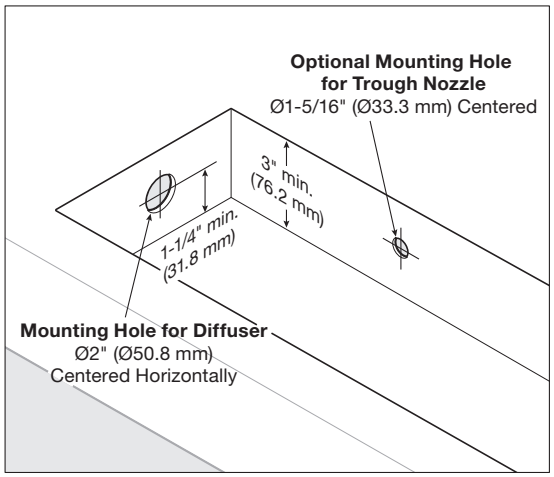

Figure 5. Diffuser and Trough Nozzle Mounting Holes

GENERAL NOTES

- Install the waste collector per the Instruction, Care, and Use manual.
- The pump motor fan must have a minimum of 1" of clearance from any wall or obstruction in order to operate correctly.
- Scrap basket is 18.8" dia. x 11.5" (477.52 mm dia. x 292.1 mm) (includes handle height) and 21" (533.4 mm) minimum clearance overhead recommended for removal.
- Tray can be rotated in 15° increments and may be shipped separately to table fabricator.
- The waste collector base assembly is shipped with the control factory-installed on the left side of the tank.
- Ensure the control is on the proper side of the tank and facing the operator; reposition if necessary.
- Use two (2) trough nozzles maximum with recommended 3' (0.91 m) spacing (See Figure 6).

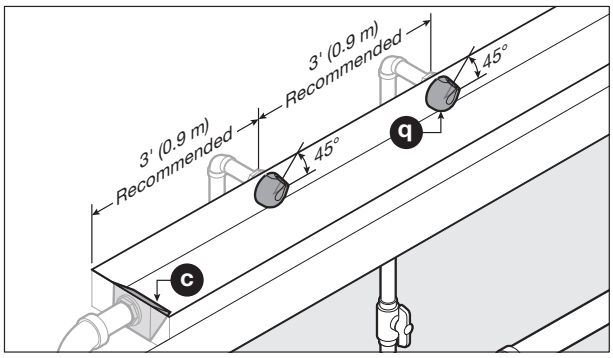

Figure 6. Typical Diffuser (c) and Trough Nozzle (q) Installation

- Use of basket cover is optional but recommended.
- It is recommended that the waste collector be cleaned daily at end of shift, and as needed throughout the day. Rinse basket cover, scrap basket, tray, and tank interior. Scrap basket may be run through dishwasher.
- DO NOT use corrosive chemicals for scrapping or cleaning.

PLUMBING NOTES

- Recirculated lines must be plumed with 6" (152.4 mm) clearance from wall.
- 1/2" NPT hot and cold water supply lines to mixer valve.
- Mixer valve includes internal check valves.
- Hot and cold water lines must match the markings on mixer valve. If lines are reversed, mixer valve will not operate properly after adjustment.
- The mixer valve may be relocated if necessary. When positioning the mixer valve, ensure it is accessible by end user if temperature adjustment is needed.
- It is recommended that ball type shutoff valves be installed in-line with the cold and hot water lines.
- A minimum of 30 psi (206.8 kPa) at the mixer valve is needed for the waste collector to operate correctly.
- If water pressure exceeds the allowable pressure of 80 psi (551.6 kPa), pressure regulators should be used.
- 2" NPT drain connection (recommended to plumb through a P-trap).
- The integrated air gap on the waste collector tank meets ASME A112.1.2-2012 standard and eliminates the need for a vacuum breaker installed with the system.

TYPICAL INSTALLATIONS – Trough (Model PRT)

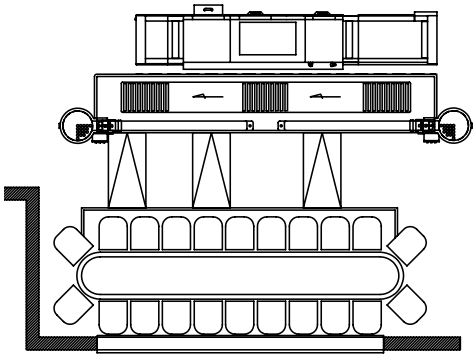
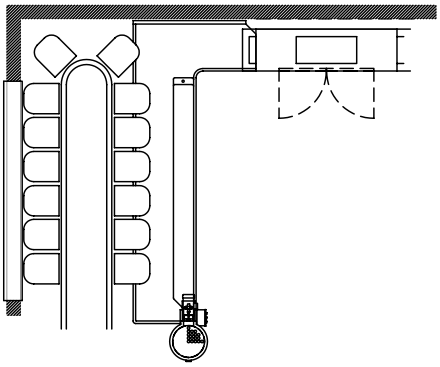
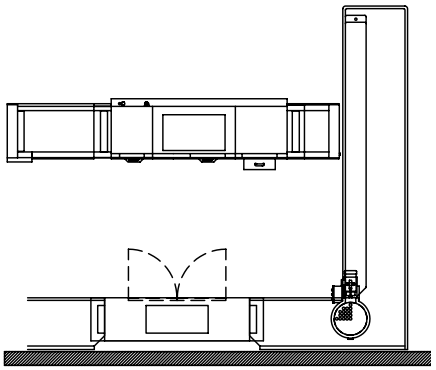
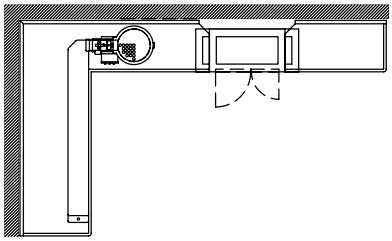
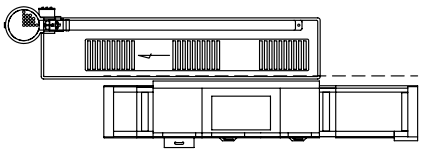
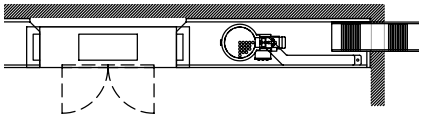

SAMPLE SPECIFICATION

- InSinkErator PowerRinse Model PRT. Pre-rinse and scrapping system with 70 GPM recirculated water flow capability, dry start protection, and adjustable run time. ___ Volts, 60 Hz, ___ Phase operation. Pre-plumbed and pre-wired base assembly with control, solenoid and pump; integrated air gap; stainless-steel mounting tray, base assembly, basket cover, pump housing, 1/4" pump inlet screen, and pump impeller; 1/4" perforated scrap basket; flanged feet; check valves; 2" drain discharge; 1/2" NPT water inlets.

PROJECT INFORMATION

Item Number: _____

Quantity: _____

Manufacturer: InSinkErator

Model Number: _____

Electrical Requirements: _____ volts _____ phase

Project: _____

Address: _____

City/State/Zip: _____

Contact: _____

Phone: _____

Dealer: City/ _____

State/Zip: _____

Contact: _____

Phone: _____

Installer: _____

Contact: _____

Phone: _____

Consultant: _____

Contact: _____

Phone: _____

InSinkErator® may make improvements and/or changes in the specification at any time, in its sole discretion, without notice or obligation and further reserves the right to change or discontinue models. ©2023 InSinkErator®. All rights reserved.