in sink erator

# POWER RINSE™

## WASTE COLLECTION SYSTEM

## Installation, Care, and Use Manual




***Trough (Model PRT)***

**⚠ WARNING** — WARNING indicates a hazardous situation which, if not avoided, could result in death or serious injury.

**⚠ CAUTION** — CAUTION indicates a hazardous situation which, if not avoided, could result in minor or moderate injury.

***NOTICE*** — NOTICE is used to address practices not related to physical injury.

Please be certain that the person who installs or uses this appliance carefully reads and understands the Safety Instructions contained in this manual.

## *Table of Contents*


**Product Overview**

Introduction ....3
System Components....4
Typical Installation ....4
Required Tools/Materials....4
Table Cutout Dimensions ....5

**Installation Instructions**

**Assembly**....6
**Plumbing**
Water Connections ....7
Adjusting Water Temperature ....8
Drain Piping ....8
**Electrical**
Electrical Disconnect Switch ....8
Electrical Connections....9
**Initial Setup and Verification**
Prepare the System ....9

**Operating Instructions**

**Main Operation**....10
Timed Run Feature ....12
**To Empty Scrap Basket** ....13
**To Clean Unit** ....13

**Troubleshooting** .... 14

**Wiring Diagrams**

Models PRT-1 (110-120V, 1 Phase)....16
Models PRT-2 (208/220-240V, 1 Phase) .... 17
Models PRT-3 (208/220-240V, 3 Phase) .... 18
Models PRT-4 (460-480V, 3 Phase) .... 19


## SAVE THESE INSTRUCTIONS

## INTRODUCTION

The PowerRinse® Waste Collection System is a food and food-related waste handling solution that improves kitchen efficiency by increasing scrapping speed and reducing bulk waste.

A series of nozzles along a trough aid in the pre-rinse and scrapping of dishes. Water flow down the trough moves waste into a scrap basket, which can then be emptied into a waste or compost receptacle, while water soluble waste is sent down the drain. The trough system increases efficiency by allowing multiple users to scrap and pre-soak dishes at the same time. The PowerRinse Waste Collection System is an alternative to using a food waste disposer or pulper system.

This Installation, Care, and Use Manual is for the Trough (Model PRT) only (see Figure 1). For the Standard (Model PRS) and Pot/Pan (Model PRP), please reference separate document.

The PowerRinse Waste Collection System is CUL® US Listed when installed in conjunction with InSinkErator pumps and controls, and per the installation instructions in this Installation, Care, and Use Manual (see Figures 3 and 4 for typical installations).

This Installation, Care, and Use Manual covers the models listed in Table 1.

*Table 1. Electrical Specifications*

| PowerRinse® Waste Collection System Trough (Model PRT) | | | |
|---|---|---|---|
| **Model** | **Part No.** | **Voltage** | **Phase** |
| PRT-1 | 15441 | 110-120V | 1 |
| PRT-2 | 15441A | 208/220-240V | 1 |
| PRT-3 | 15441B | 208/220-240V | 3 |
| PRT-4 | 15441C | 460-480V | 3 |

***IMPORTANT NOTE** – These installation instructions are for the benefit of the installing contractor. InSinkErator and/or InSinkErator Factory Authorized Service Centers do not make original installations. For technical information not covered in these instructions, contact the supplier, an InSinkErator Field Sales Representative, or InSinkErator Foodservice Sales and Service at 1-800-845-8345.*




*Figure 1. Trough (Model PRT)*

## SYSTEM COMPONENTS

The PowerRinse® Waste Collection System includes the following components (see Figure 2):

a. Trough Tray
b. Scrap Basket
c. Diffuser Assembly
   d. Ball Valve
e. Waste Collector Base Assembly (see Figure 3)
   f. Waste Collector Tank and Mounting Assembly
   g. Control (Pre-wired)
   h. Solenoid (Pre-wired)
   i. Pump (Pre-wired)
   j. Air Gap
   k. Leveling Flange Feet
   l. 2" Drain Discharge
   m. 1/2" NPT Water Inlets (Hot and Cold Connections)
n. Installation, Care, and Use Manual
o. Mounting Hardware
   • Lock Washers (12)
   • 1/4"-20 Nuts (12)
p. Basket Cover

## OPTIONAL COMPONENTS

q. Trough Nozzle Assembly
   r. Ball Valve
s. Cover
t. Rack Guide

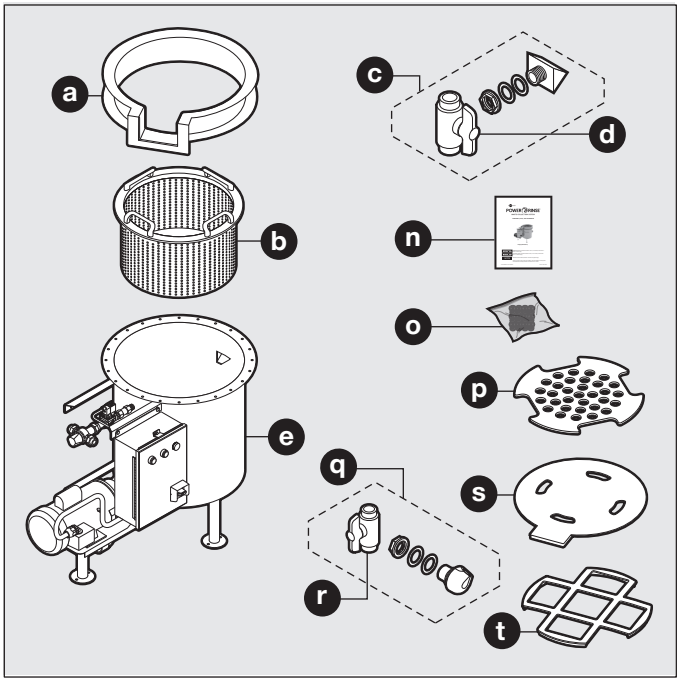


*Figure 2. System Components*

## TYPICAL INSTALLATION

Figures 3 and 4 illustrate the typical installation of the PowerRinse® Waste Collection System. For a complete list of system components refer to the System Components list located to the left of Figure 3. See Figure 5 on next page for system dimensions.

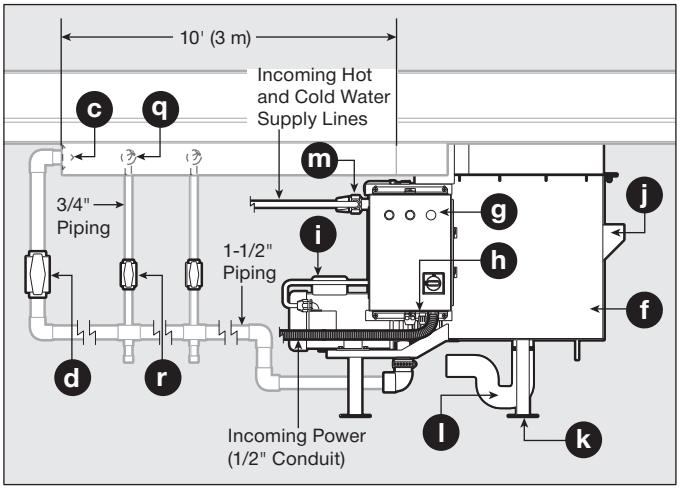


*Figure 3. Typical Installation*

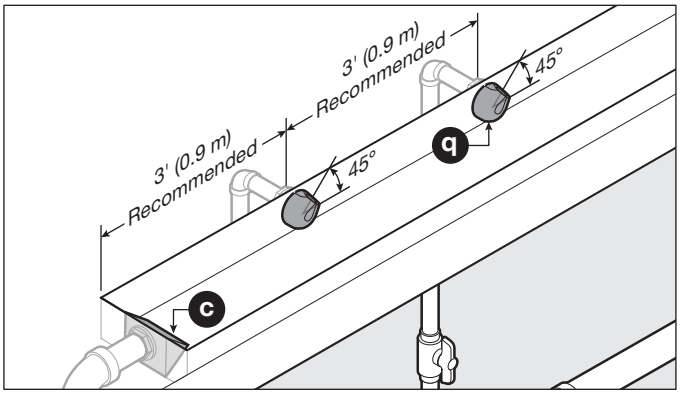


*Figure 4. Typical Diffuser and Trough Nozzle Installation*

## NOTICE

The PowerRinse® Waste Collection System pump motor fan must have a minimum of 1" of clearance from any wall or obstruction in order to operate correctly.

## REQUIRED TOOLS / MATERIALS

The following items are needed to install the PowerRinse® Waste Collection System:

☐ Screwdriver
☐ Pipe wrench
☐ 7/16" wrench or socket
☐ Tools and materials necessary to install the power line, drain line, and the hot and cold water

The following items are needed if repositioning the control:

☐ 1/2" wrench or socket

**NOTICE**

The PowerRinse® Waste Collection System pump motor fan must have a minimum of 1" of clearance from any wall or obstruction in order to operate correctly.

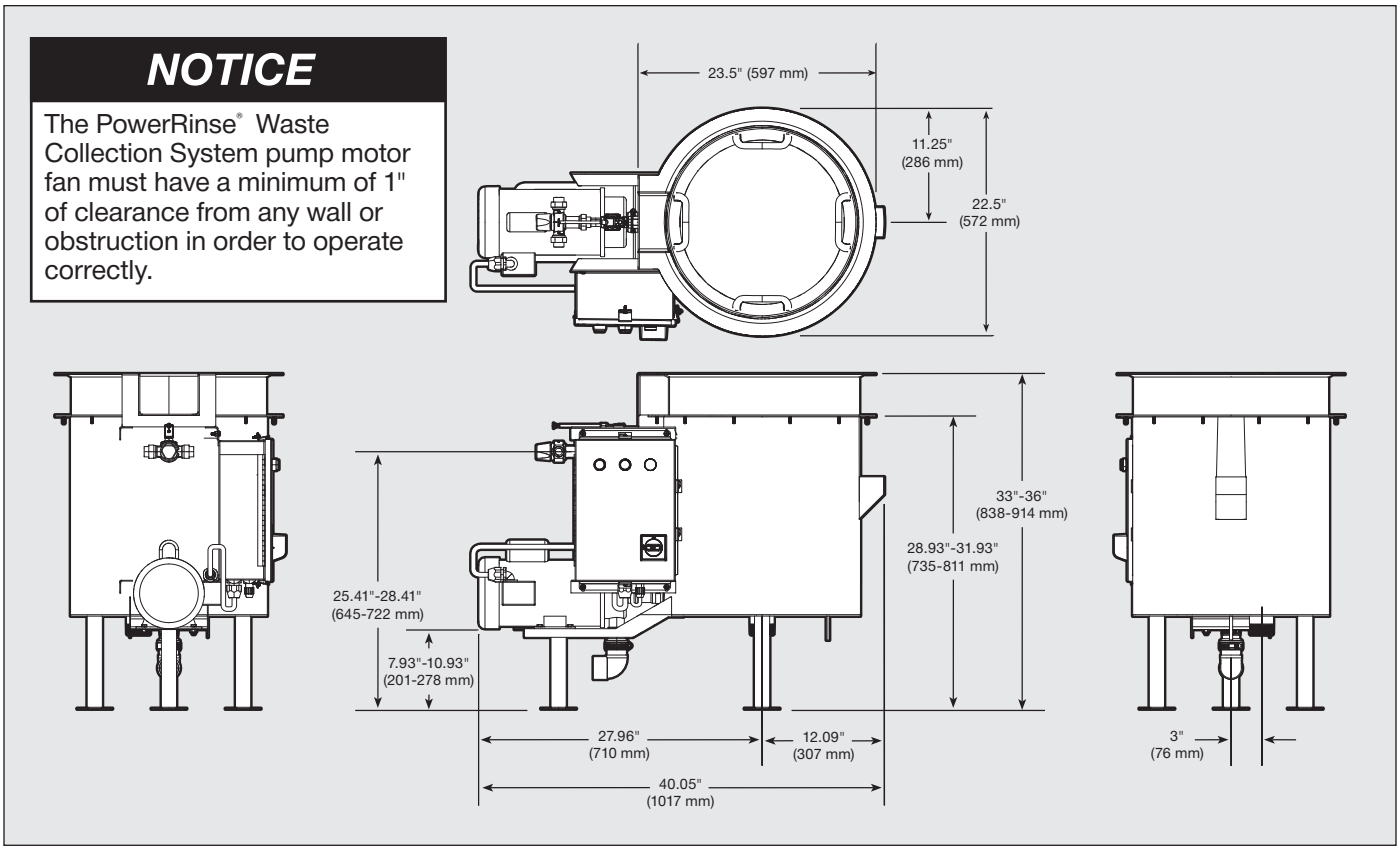


*Figure 5. PowerRinse® Waste Collection System Dimensions*

## *TABLE CUTOUT DIMENSIONS*

Use the dimensions from Figure 6 for Trough (Model PRT) table cutout. Weld the waste collector tray to the underside of the table so the opening aligns with the trough in the table.

If using in line with a dishwasher, it is recommended to mount the waste collector tray a minimum of 24" away from the loading end of the dishwasher to allow enough table space for a dish rack.

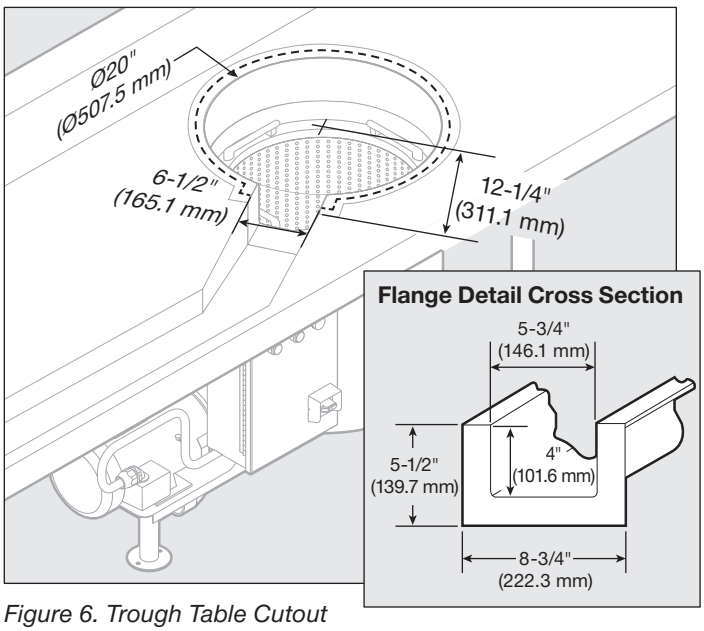


*Figure 6. Trough Table Cutout (Model PRT)*

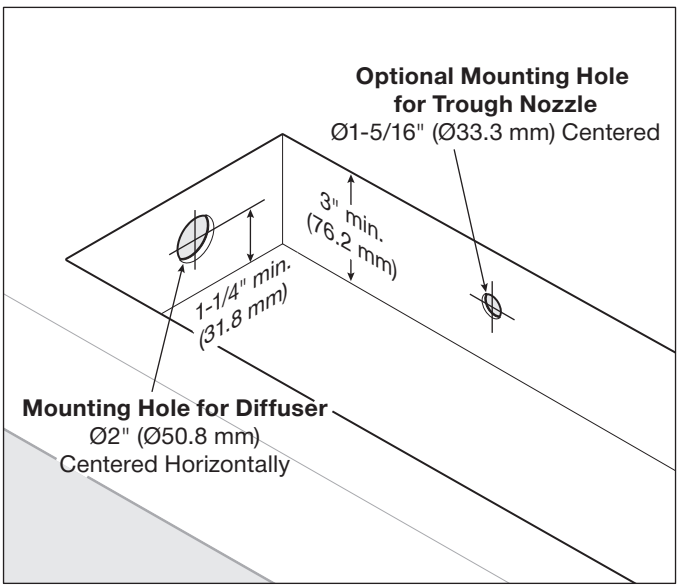


*Figure 7. Diffuser and Trough Nozzle Mounting Holes*

## *ASSEMBLY*

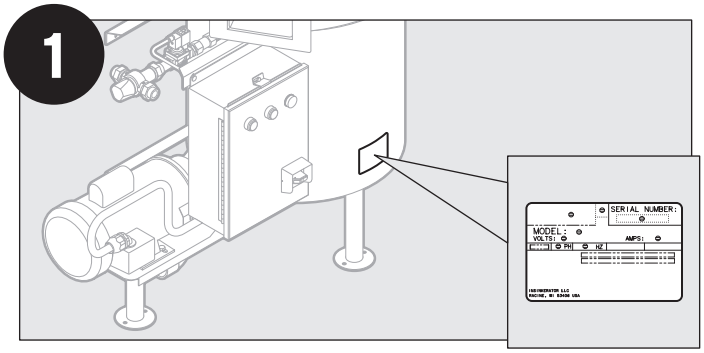


Remove unit from package. Ensure that the power supply is appropriate based on the control configuration ordered with the unit. Verify using spec plate on tank.

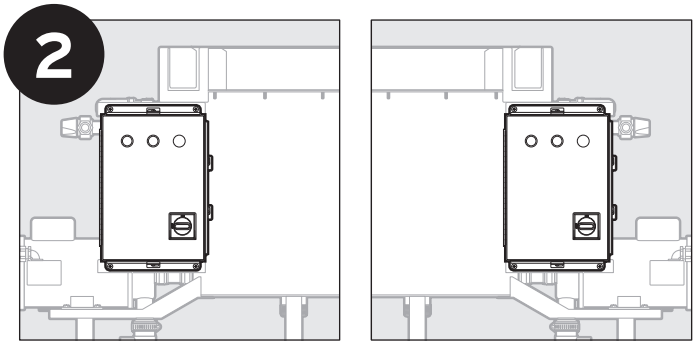


Ensure that the control is on the proper side of the tank. The control should always face the operator.

***NOTE:*** *The waste collector base assembly is shipped with the control factory-installed on the left side of the tank.*

CHANGING THE CONTROL LOCATION

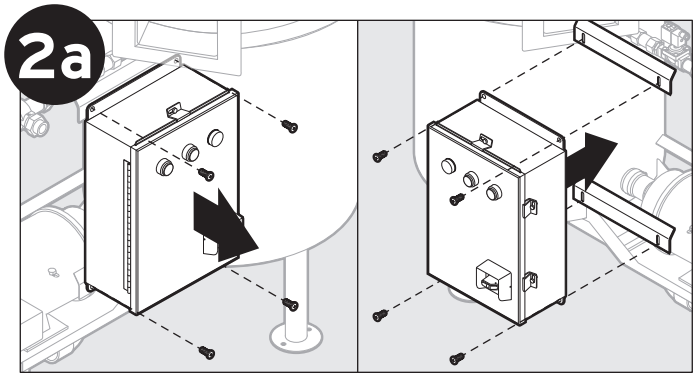


**Optional –** to relocate the control, remove and save four (4) bolts and nuts. Reposition box on other side of tank and secure with previously removed hardware. It is not necessary to disconnect factory-installed wiring.

After relocating control, verify conduit and solenoid connections are tight.

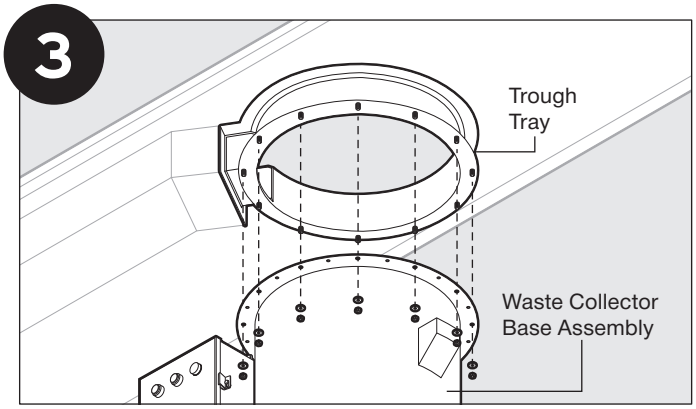


Secure waste collector base assembly to trough tray using provided lock washers and 1/4"-20 nuts.

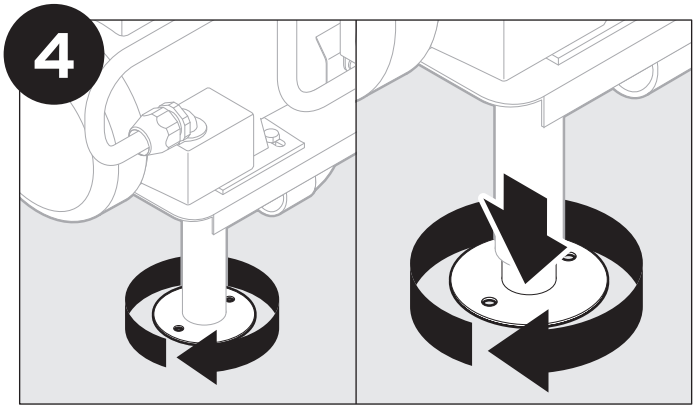


Rotate legs clockwise when viewing from top until they extend to the floor.

**Optional –** use the provided holes on the flanged foot to secure unit to floor with anchors (not provided by InSinkErator).

## ASSEMBLY (cont.)

### INTERNAL PLUMBING INSTRUCTIONS

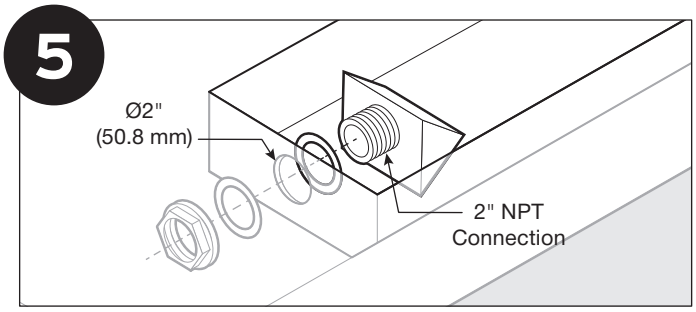


Install diffuser at end of trough.

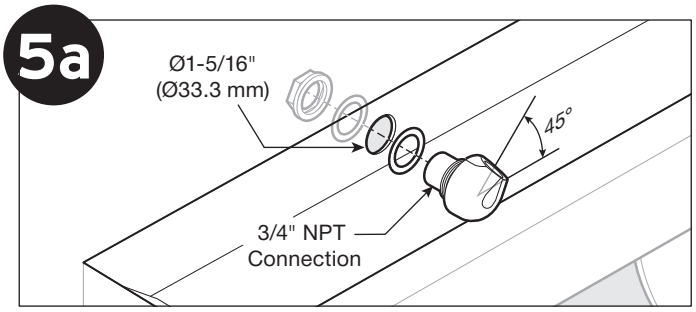


**Optional –** Install trough nozzle(s) at a 45 degree angle as shown.

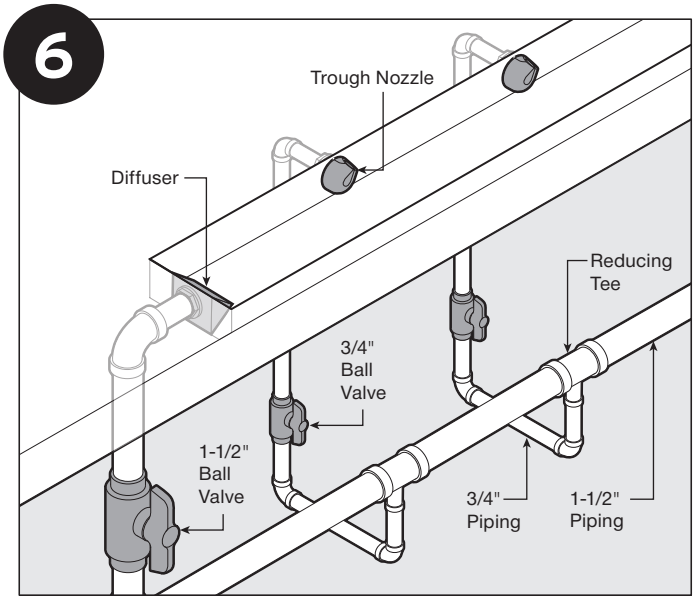


Plumb 1-1/2" pipe from pump outlet to diffuser opening (re-circulated pipe). A ball valve should be installed near diffuser to regulate water flow.

***NOTE:*** *If installing trough nozzles, use reducing tees to plumb 3/4" pipe from the 1-1/2" re-circulated pipe to nozzle(s). A ball valve should be installed near each nozzle(s).*

## PLUMBING

**NOTICE**

***PROPERTY DAMAGE***

- Installation must comply with all local plumbing codes.
- If water pressure exceeds the recommended 80 psi, pressure regulators should be used.

WATER CONNECTIONS

Plumb a hot and a cold water supply line to mixer valve (see Figure 8). Connections are 1/2" NPT.

***IMPORTANT NOTES:***

- *Mixing valve can be relocated.*
- *Hot and cold water lines must match the markings on mixer valve. If lines are reversed, mixer valve will not operate properly after adjustment.*
- *It is recommended that ball type shutoff valves be installed in line with the cold and hot water lines.*
- *A minimum of 30 psi at the mixer valve is needed for the waste collector to operate correctly.*

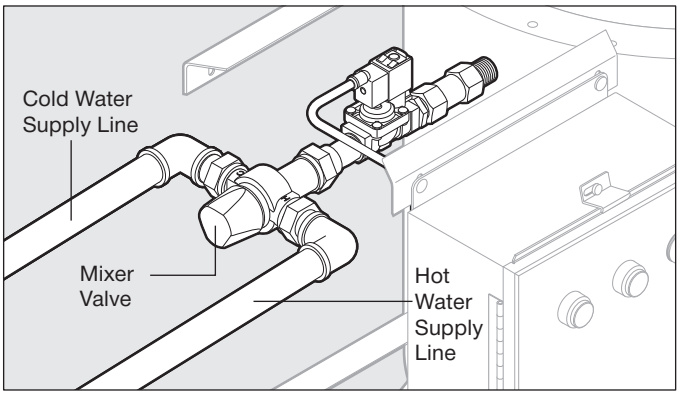


*Figure 8. Water Connections*

***IMPORTANT NOTE:*** *This air gap meets ASME A112.1.2-2012 standard and eliminates the need for a vacuum breaker installed with the system (see Figure 9).*

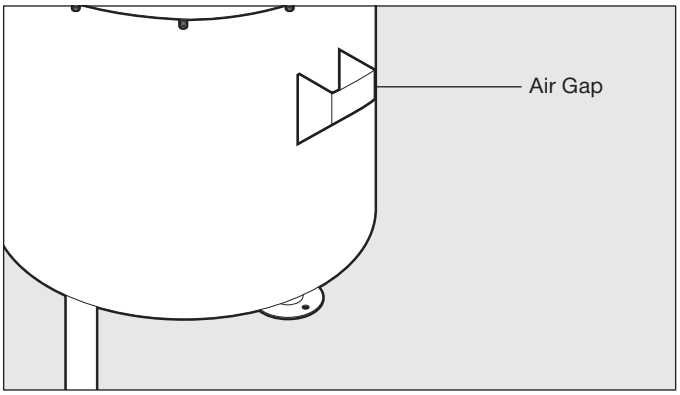


*Figure 9. Air Gap*

## PLUMBING (cont.)

ADJUSTING WATER TEMPERATURE

***NOTE:*** *It may be necessary to adjust the mixing valve to set the appropriate water temperature.*

To adjust water temperature (see Figure 10):

1. Unscrew button head screw on the valve cap until cap can be pulled out.
2. Pull cap out.
3. Turn cap to adjust water temperature.
4. When desired temperature is reached, push cap in and tighten button head screw to secure cap.

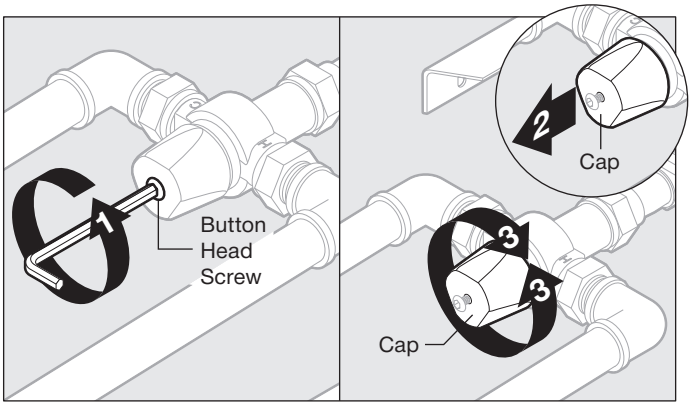


*Figure 10. Adjusting Water Temperature*

DRAIN PIPING

Plumb a 2" drain line through a “P-trap” from the 2" male threaded nipple on the bottom of the waste collector tank (see Figure 11).

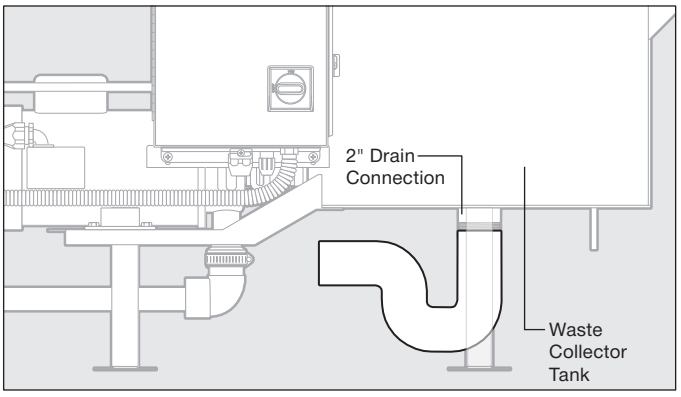


*Figure 11. Drain Piping*

**NOTICE**

Ensure all connections are tight and leak free, including rubber boots and plumbing connections supplied by the manufacturer, before moving forward and engaging the system.

## ELECTRICAL

**⚠ WARNING**

***ELECTRICAL SHOCK***

- Turn off all electrical supply to the collector before attempting any work on it. Use a voltmeter or circuit tester to ensure that power is off.
- Installation must conform to local electrical codes.
- All control centers and collector components must be carefully and permanently grounded.
- A properly fused disconnect must be installed at the electrical supply source for the control center.

ELECTRICAL DISCONNECT SWITCH

The switch on the front panel of the control disconnects the line voltage (see Figure 12). It interlocks with the front cover so that the panel cannot be opened unless the switch is in the OFF position.

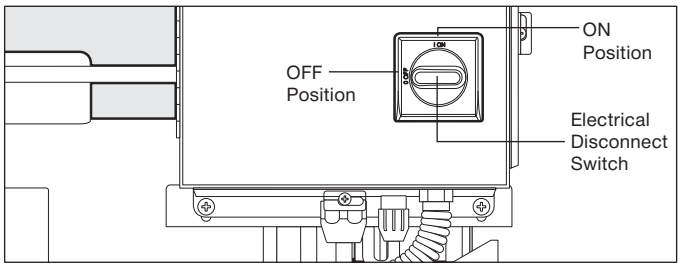


*Figure 12. Electrical Disconnect Switch*

***NOTE:*** *Use of the electrical disconnect switch results in a 30 second delay before system can be restarted. You must wait 30 seconds after reactivation of the line disconnect switch before system will start.*

**NOTICE**

***PROPERTY DAMAGE***

- Ensure that the control center voltage and phase match the pump and electrical supply. Reference the nameplates for voltage and phase.
- The pump motor wiring diagram is shown on the casing of the pump.

**⚠ WARNING**

***PERSONAL INJURY***

Disconnect electricity at line disconnect switch before servicing system.

## *ELECTRICAL (cont.)*

ELECTRICAL CONNECTIONS

***NOTE:*** *Ensure that the power supply is appropriate based on the control configuration ordered with the unit.*

One electrical connection is required. To connect the waste collection system to the electricity:

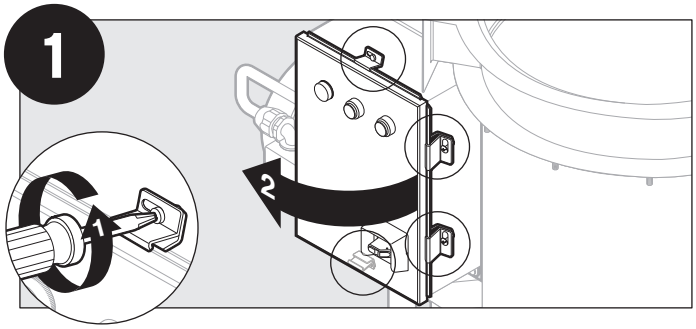


Remove top cover retainers by loosening screws and open the front panel.

***NOTE:*** Electrical disconnect switch must be in OFF position to open control panel (see Figure 12).

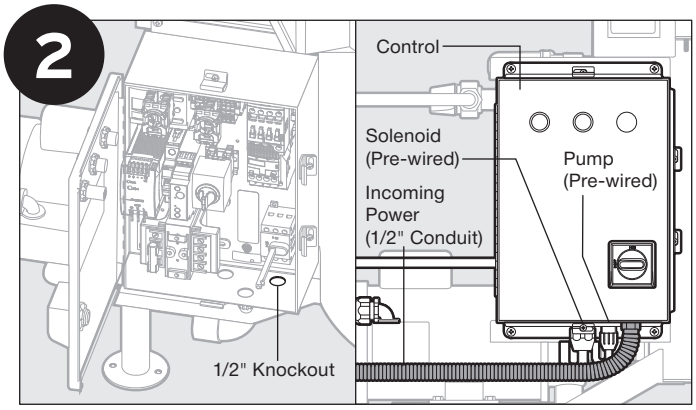


Run power from main power supply to the 1/2" knockout on bottom of control and connect as shown.

***NOTE:*** *Be sure to use liquid tight conduit and conduit fittings.*

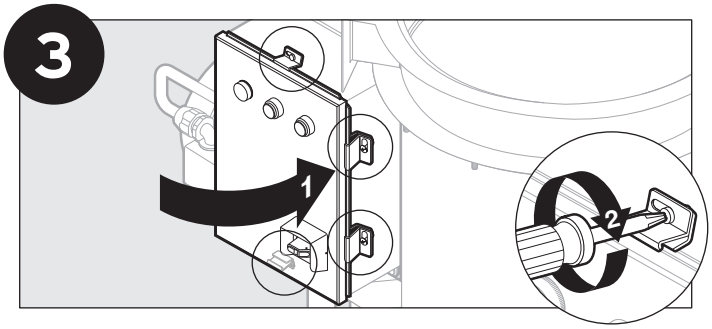


Close front panel and tighten screws on top cover retainers to secure.

## *INITIAL SETUP AND VERIFICATION*

PREPARE THE SYSTEM

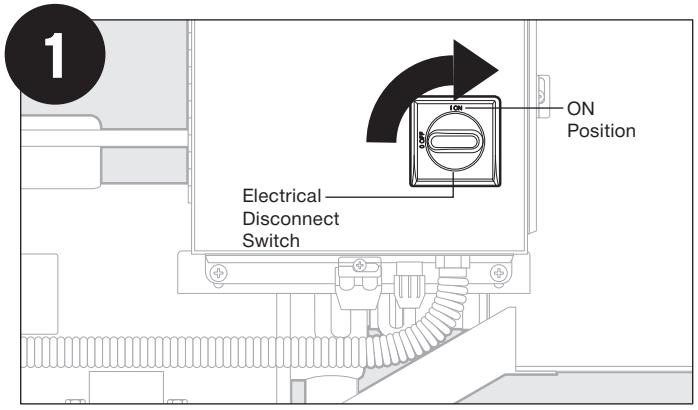


Turn electrical disconnect switch to the ON position. Open shutoff valves in water lines, if installed.

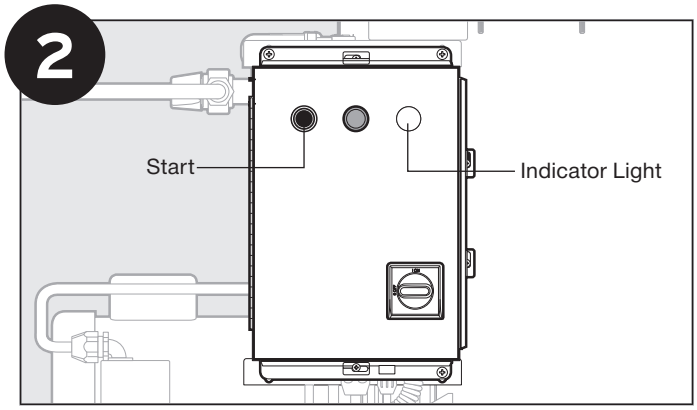


Press the START button. Indicator light turns on.

***NOTE:*** *If the unit does not turn on, see Troubleshooting.*

3 Verify that the pump is functioning correctly.

***IMPORTANT NOTE:*** *Wait time until pump engages is approximately 60 seconds after starting unit.*

### INITIAL SETUP AND VERIFICATION (cont.)

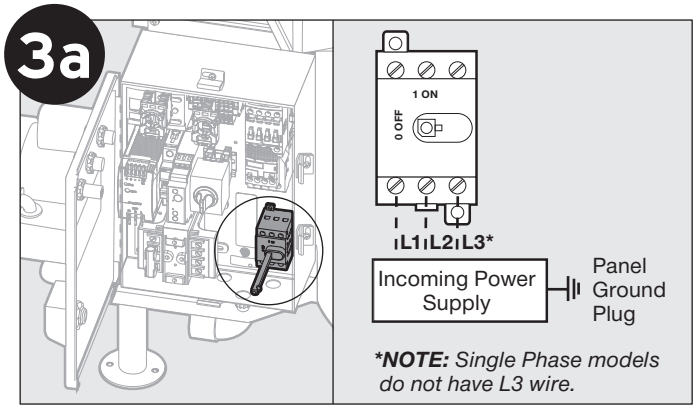


**For 3 Phase units only –** Ensure pump motor fan is rotating clockwise (when viewed from the motor end). If rotation is counter-clockwise, turn off power supply, open front panel, and switch L1 and L2 connections.

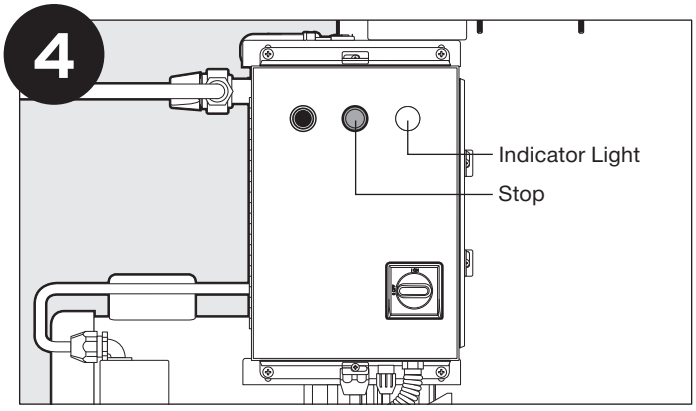


Turn off unit by pressing the STOP button. Indicator light turns off.

***NOTE:*** *If the unit does not turn off, see Troubleshooting.*



### MAIN OPERATION

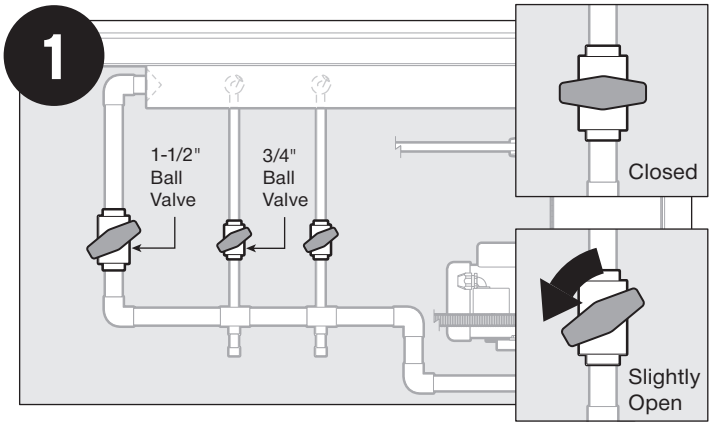


Check ball valve(s) settings to ensure they are not completely shut or fully open.

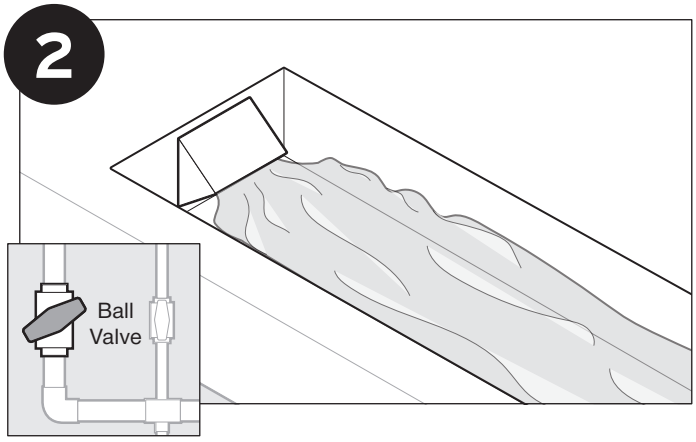


Adjust ball valve for diffuser until desired water flow rate in trough is achieved.

**Optional –** If trough nozzles are installed, adjust ball valve(s) until water plume hits desired location in the trough.

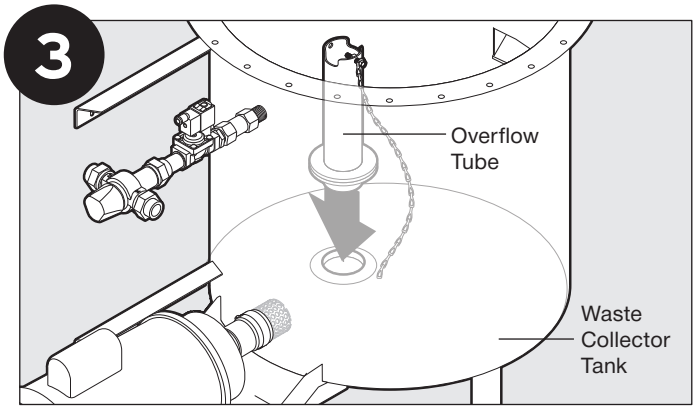


Place the overflow tube into the drain at the bottom of waste collector tank.

## MAIN OPERATION (cont.)

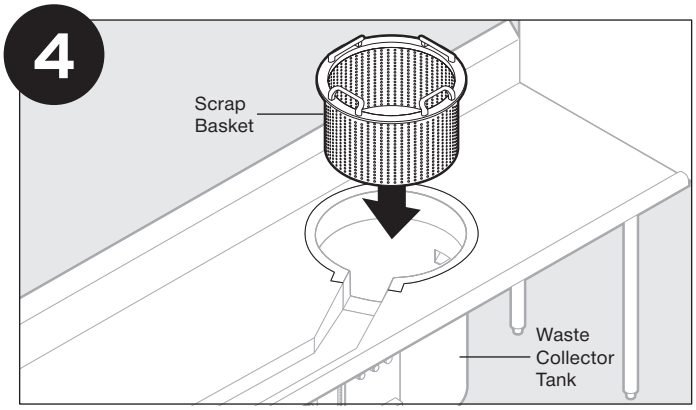


Place scrap basket inside waste collector tank. Unit must always have the scrap basket in place during operation.

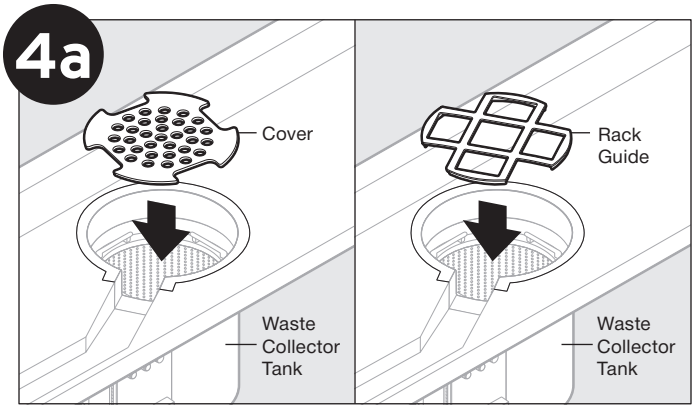


**Optional –** Place cover or rack guide on trough tray. Use of cover/rack guide is optional but recommended to maximize workspace.

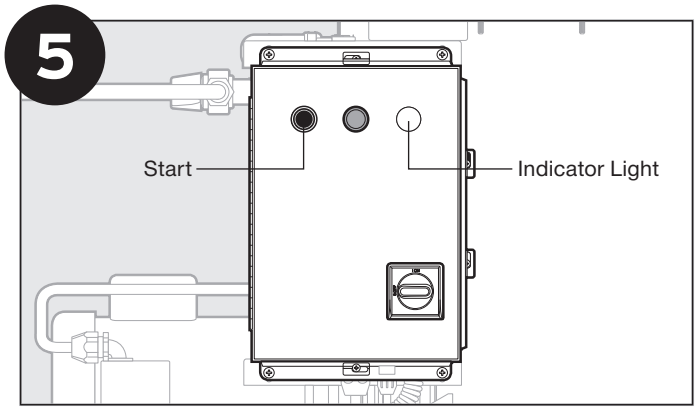


To begin, press START button on control and allow the reservoir tank to fill with water. Indicator light turns on. Pump turns on and water plume starts once tank has reached optimal fill level (approximately 60 seconds after pushing the START button).

**6** Scrap soiled dishes using the water in the trough and from the nozzle plume(s) to help move solid waste from the surface.
Pre-soak problem dishes with baked-on or difficult to remove food by setting them in the trough or under the plume(s). Solid waste is collected in the scrap basket.

### NOTICE

**DO NOT** use corrosive chemicals for scrapping.

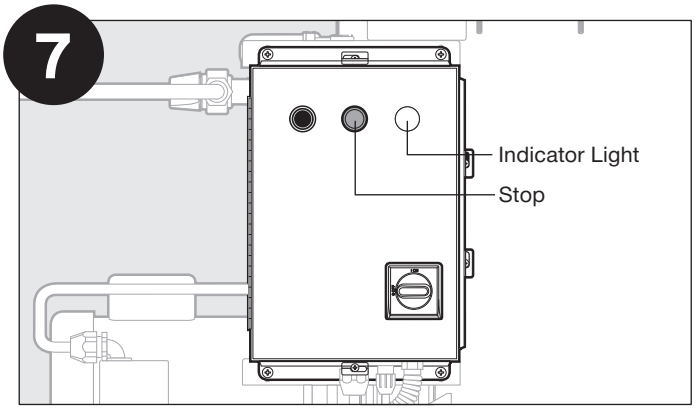


Press STOP on the control panel. Indicator light turns off.

## *MAIN OPERATION (cont.)*

TIMED RUN FEATURE

The PowerRinse® Waste Collection System has a built-in shut off timer in the control. The timer is preset for 20 minutes from factory. After the set time elapses, the unit will shut off.

To turn timed run ON or OFF:

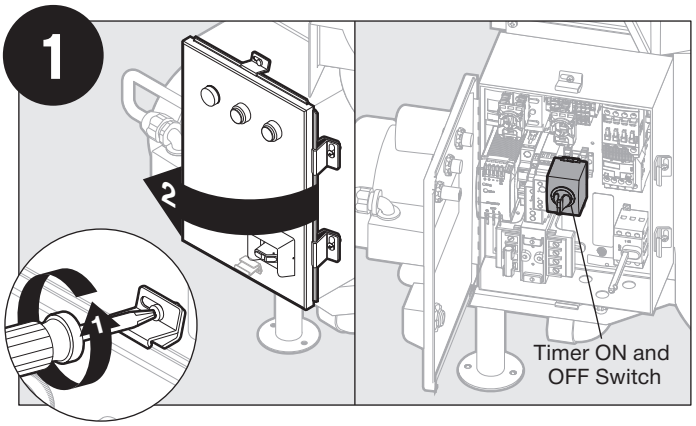


Open the control panel. Locate the Timer ON and OFF switch.

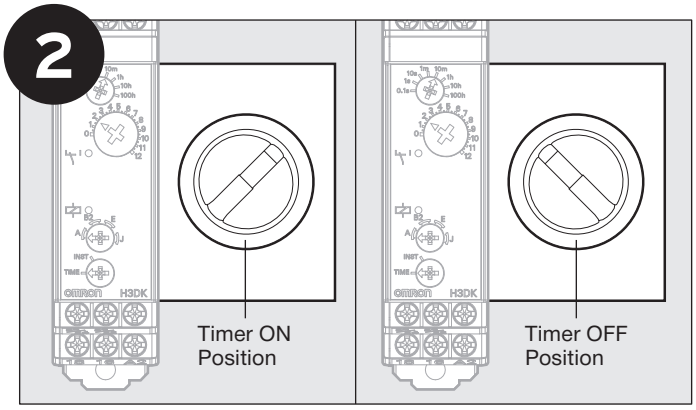


Move switch to desired position.

To adjust timer:

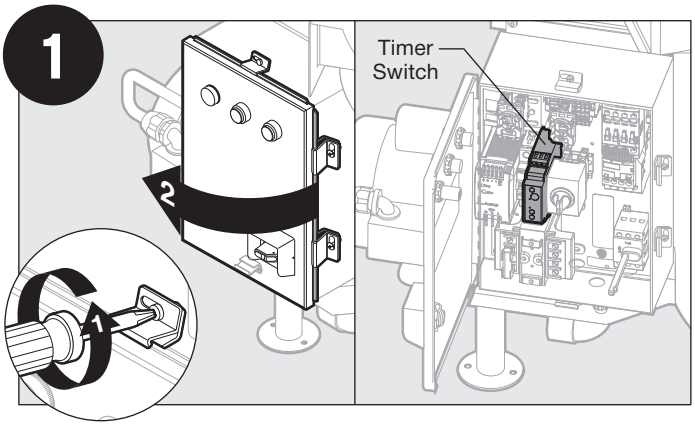


Open the control panel. Locate the Timer Switch.

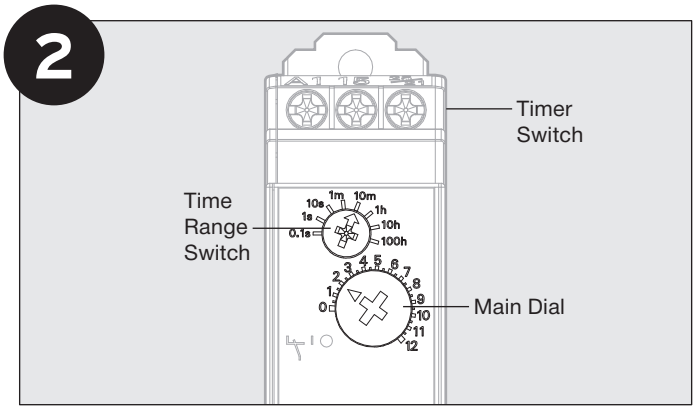


Rotate time range switch or main dial to desired settings (as shown). The time range switch sets the increments (0.1s, 1s, 10s, etc.) and the main dial is the “multiplier.” The factory default is 10m on time range switch and 2 on the main dial, or 20 minutes.

## TO EMPTY SCRAP BASKET

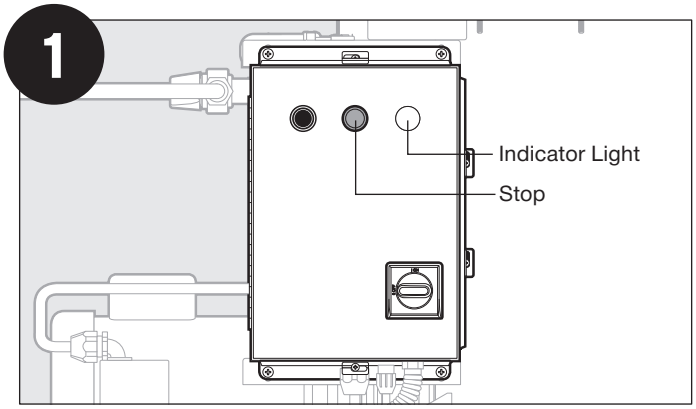


Ensure unit is turned off by pressing the STOP button on the control.

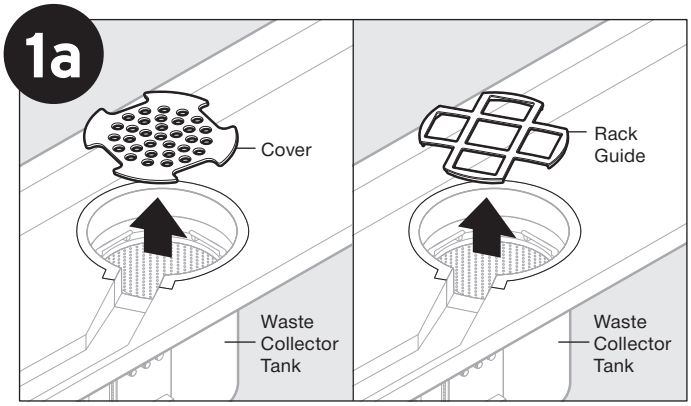


Remove cover or rack guide, if in use.

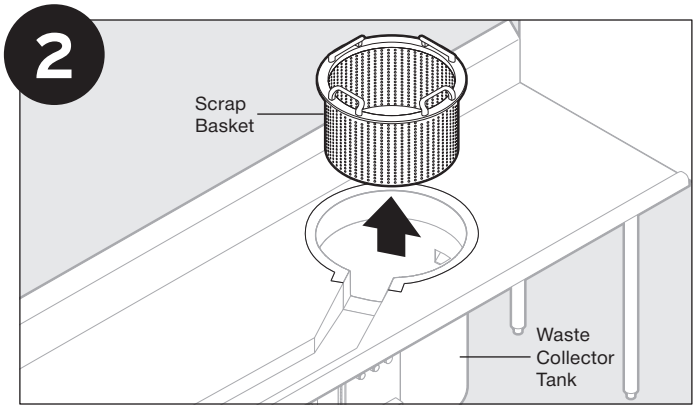


Remove scrap basket and dump waste into appropriate trash or compost receptacle.

## TO CLEAN UNIT

It is recommended that unit be cleaned daily at end of shift, and as needed throughout the day.

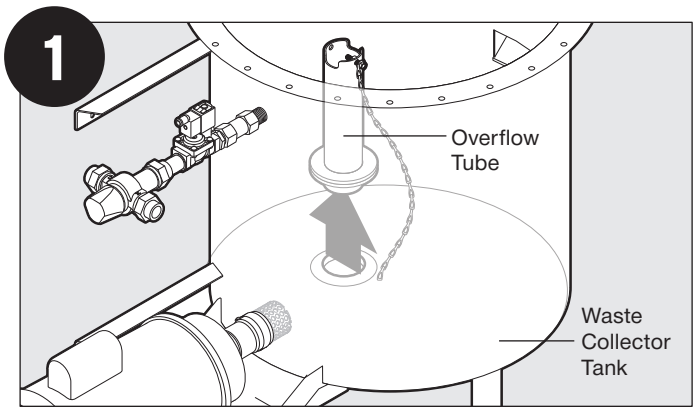


Turn off unit and empty scrap basket (see above instructions). Pull overflow tube to drain water inside waste collector tank.

**2** Rinse cover or rack guide, scrap basket, tray, pump inlet screeen, and tank interior. Scrap basket may be run through dishwasher.

### NOTICE

**DO NOT** use corrosive chemicals for scrapping.

## ⚠ WARNING

***ELECTRICAL SHOCK***

- Turn off all electrical supply to the collector before attempting to work on it. Use a voltmeter or circuit tester to ensure that the power is off.
- **DO NOT** bypass interlock switch.

Troubleshooting for problems other than what is listed below should be performed by a qualified service person. Troubleshooting performed by untrained personnel could result in electrical shock or damage to the PowerRinse® waste collection system.

## *SYSTEM TROUBLESHOOTING*

| PROBLEM | POSSIBLE CAUSE | SOLUTION |
|---|---|---|
| Waste Collector does not turn on. | • Electrical supply turned off. | • Turn on the electrical supply. |
| | • Fuse blown or circuit breaker turned off at power supply. | • Replace fuse or reset circuit breaker. |
| | • Control circuit fuse blown. | • Replace fuse. |
| | • Line disconnect switch on control not in the “ON” position. | • Turn to “ON” position, wait 30 seconds before attempting to start again. |
| | • Line disconnect switch on control is defective. | • Call for service. |
| | • Start switch on control center is defective. | • Call for service. |
| | • Stop switch on control center is defective. | • Call for service. |
| Waste Collector will start when “START” button is pushed, but shuts down when “START” button is released. | • Insufficient time allowed after line disconnect switch on control center is turned to the “ON” position. | • Allow 30 seconds before attempting system startup (at “START” switch). |
| | • 24V power from control center (control circuit) is low or not present. | • Call for service. |
| Waste Collector stops unexpectedly. | • Fuse blown or circuit breaker tripped at power source. | • Replace fuse or reset circuit breaker. |
| | • 24V power from control center (control circuit) is low or not present. | • Call for service. |
| | • STOP button on control has been pushed. | • Push “START” button on control center. |
| | • Line disconnect switch has been turned to the “OFF” position. | • Turn to “ON” position, wait 30 seconds before attempting to start system.<br>***NOTE:*** *Line disconnect switch is only intended for use in the event of control center servicing.* |
| Waste Collector turns on, but pump does not operate correctly. | • Pump clogged. | • Call for service. |
| | • Pump inlet screen clogged. | • Call for service. |
| | | • Clean unit. |

# *Troubleshooting*

| PROBLEM | POSSIBLE CAUSE | SOLUTION |
|---|---|---|
| Water flows continuously before control is turned on. | • Solenoid valve is stuck open.<br>• Solenoid valve is defective. | • Call for service.<br>• Replace solenoid valve. |
| Drain is clogged. | • Scrap basket not in place when using Waste Collector.<br>• Water is too cold. | • Call plumber.<br>***NOTE:*** *Scrap basket should be in place at all times during operation.*<br>• Adjust mixer valve. |
| Water does not fill in tank. | • Overflow pipe not in drain. | • Place overflow pipe in drain. |
| Water system is too hot or cold. | • Mixing valve not adjusted properly. | • Adjust mixing valve to achieve proper water temperature. |
| Pump leaks water. | • Pump has failed. | • Replace pump. |
| Waste Collector not circulating any water or not enough water. | • Ball valve(s) closed. | • Adjust ball valve – open more. |
| Unit does not stop. | • Control has failed. | • Stop unit by turning the electrical disconnect switch to the OFF position. Call for service. |
| Drain consistently clogs. | • Consultation required to troubleshoot. | • Call plumber. |
| Pump inlet screen clogged. | • Scrap basket not in place when using Waste Collector. | • Turn off unit, remove basket and clean debris from screen with hand or overhead sprayer. |

# Model PRT-1 (110-120V, 1 Phase) Wiring Diagram

## ⚠ WARNING

***ELECTRICAL SHOCK***

- Turn off all electrical supply to the collector before attempting any work on it. Use a voltmeter or circuit tester to ensure that power is off.
- Installation must conform to local electrical codes.
- All control centers and collector components must be carefully and permanently grounded.
- A properly fused disconnect must be installed at the electrical supply source for the control center.

## NOTICE

***PROPERTY DAMAGE***

- Ensure that the control center voltage and phase match the pump and electrical supply. Reference the nameplates for voltage and phase.
- The pump motor wiring diagram is shown on the casing of the pump.

**Note:** Black wires = Line voltage (110 - 120 V).

**110-120 V**
**1 Phase**

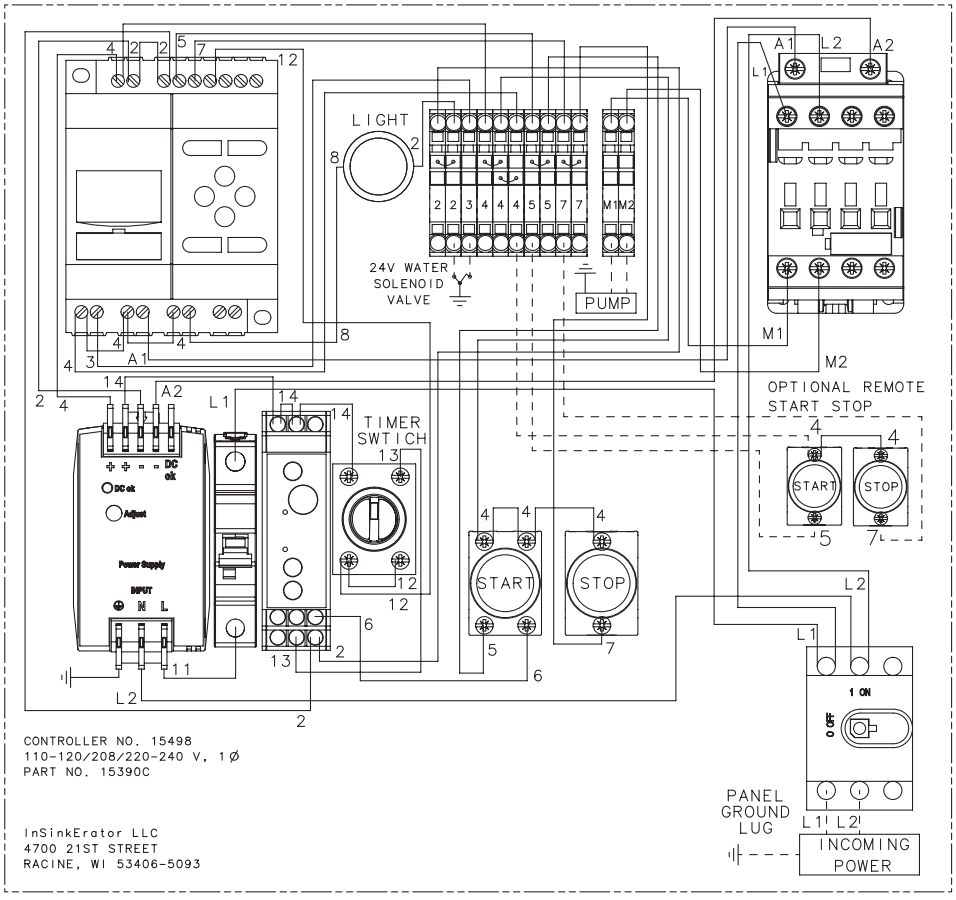


**Call Toll Free 1-800-845-8345 for the nearest InSinkErator Authorized Service Agency or to reach Technical Support.**

# Model PRT-2 (208/220-240V, 1 Phase) Wiring Diagram

## ⚠ WARNING

***ELECTRICAL SHOCK***

- Turn off all electrical supply to the collector before attempting any work on it. Use a voltmeter or circuit tester to ensure that power is off.
- Installation must conform to local electrical codes.
- All control centers and collector components must be carefully and permanently grounded.
- A properly fused disconnect must be installed at the electrical supply source for the control center.

## NOTICE

***PROPERTY DAMAGE***

- Ensure that the control center voltage and phase match the pump and electrical supply. Reference the nameplates for voltage and phase.
- The pump motor wiring diagram is shown on the casing of the pump.

**Note:** Black wires = Line voltage (208/220 - 240 V).

**208/220-240V**
**1 Phase**

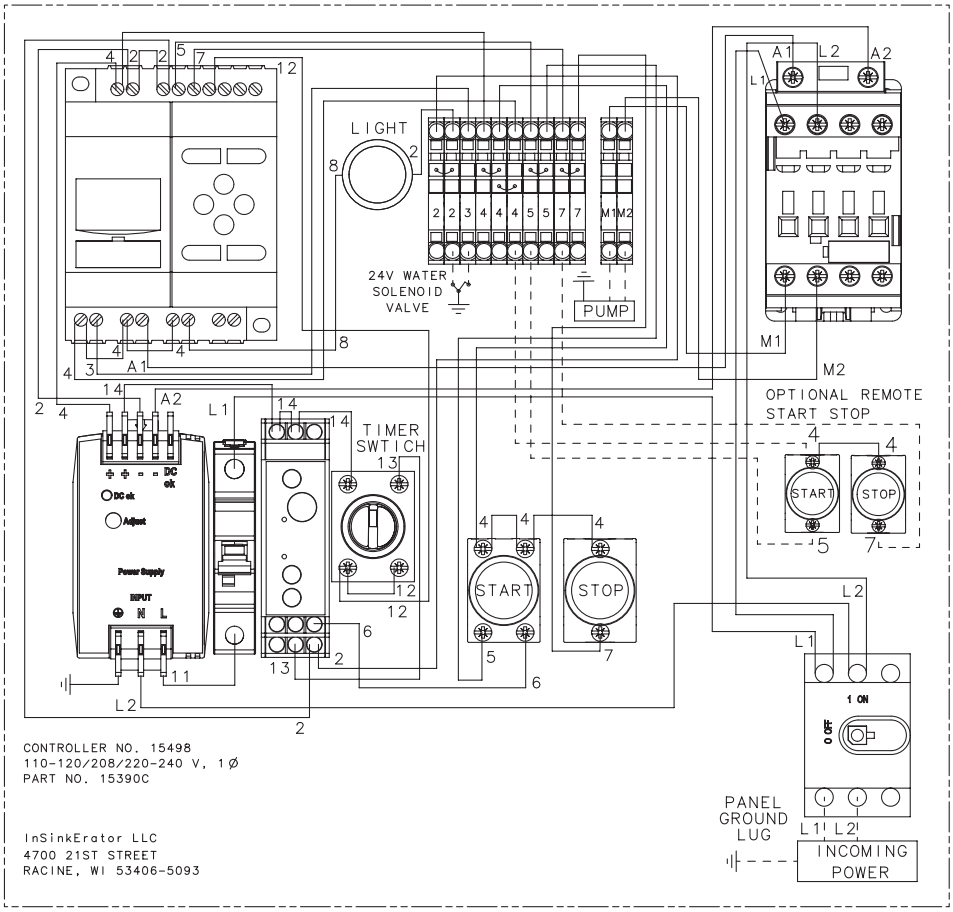


**Call Toll Free 1-800-845-8345 for the nearest InSinkErator Authorized Service Agency or to reach Technical Support.**

# Model PRT-3 (208/220-240V, 3 Phase) Wiring Diagram

## ⚠ WARNING

***ELECTRICAL SHOCK***

- Turn off all electrical supply to the collector before attempting any work on it. Use a voltmeter or circuit tester to ensure that power is off.
- Installation must conform to local electrical codes.
- All control centers and collector components must be carefully and permanently grounded.
- A properly fused disconnect must be installed at the electrical supply source for the control center.

## NOTICE

***PROPERTY DAMAGE***

- Ensure that the control center voltage and phase match the pump and electrical supply. Reference the nameplates for voltage and phase.
- The pump motor wiring diagram is shown on the casing of the pump.

**Note:** Black wires = Line voltage (208/220 - 240 V).

**208/220-240V 3 Phase**

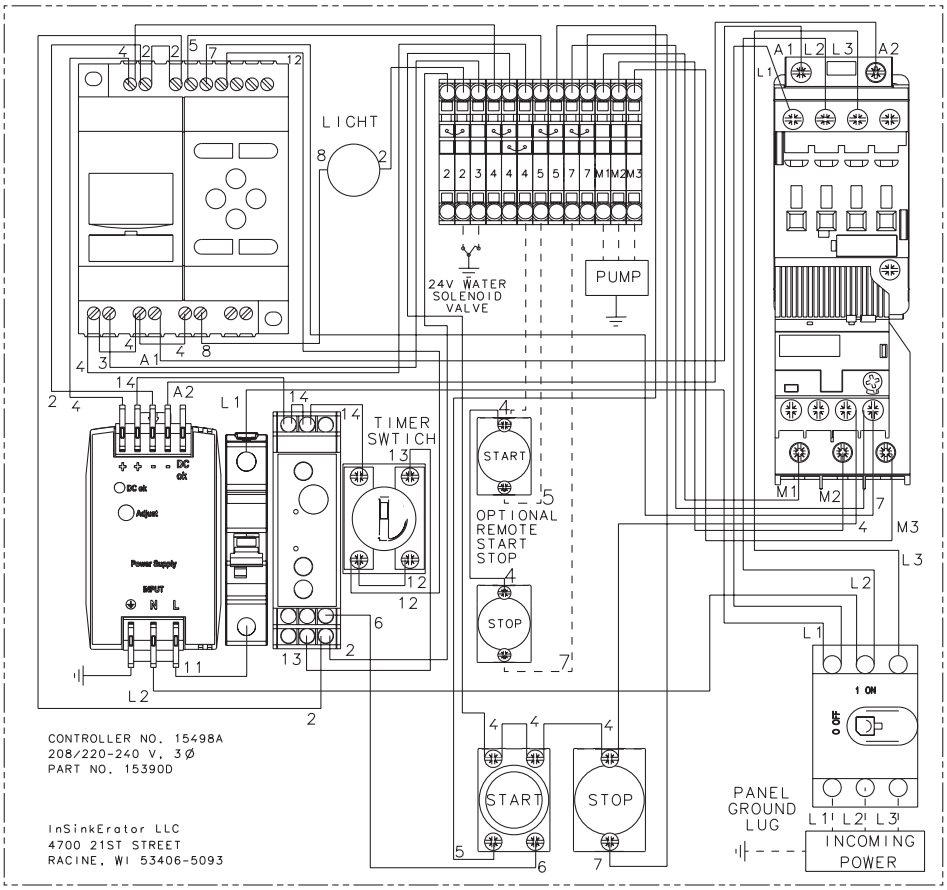


**Call Toll Free 1-800-845-8345 for the nearest InSinkErator Authorized Service Agency or to reach Technical Support.**

| Overload Settings | | |
|---|---|---|
| **Model** | **Current** | **Reset** |
| PRT-3 | 3.2 | Automatic |

# Model PRT-4 (460-480V, 3 Phase) Wiring Diagram

## ⚠ WARNING

***ELECTRICAL SHOCK***

- Turn off all electrical supply to the collector before attempting any work on it. Use a voltmeter or circuit tester to ensure that power is off.
- Installation must conform to local electrical codes.
- All control centers and collector components must be carefully and permanently grounded.
- A properly fused disconnect must be installed at the electrical supply source for the control center.

## NOTICE

***PROPERTY DAMAGE***

- Ensure that the control center voltage and phase match the pump and electrical supply. Reference the nameplates for voltage and phase.
- The pump motor wiring diagram is shown on the casing of the pump.

**Note:** • Black wires = Line voltage (460 - 480 V).

**460-480V**
**3 Phase**

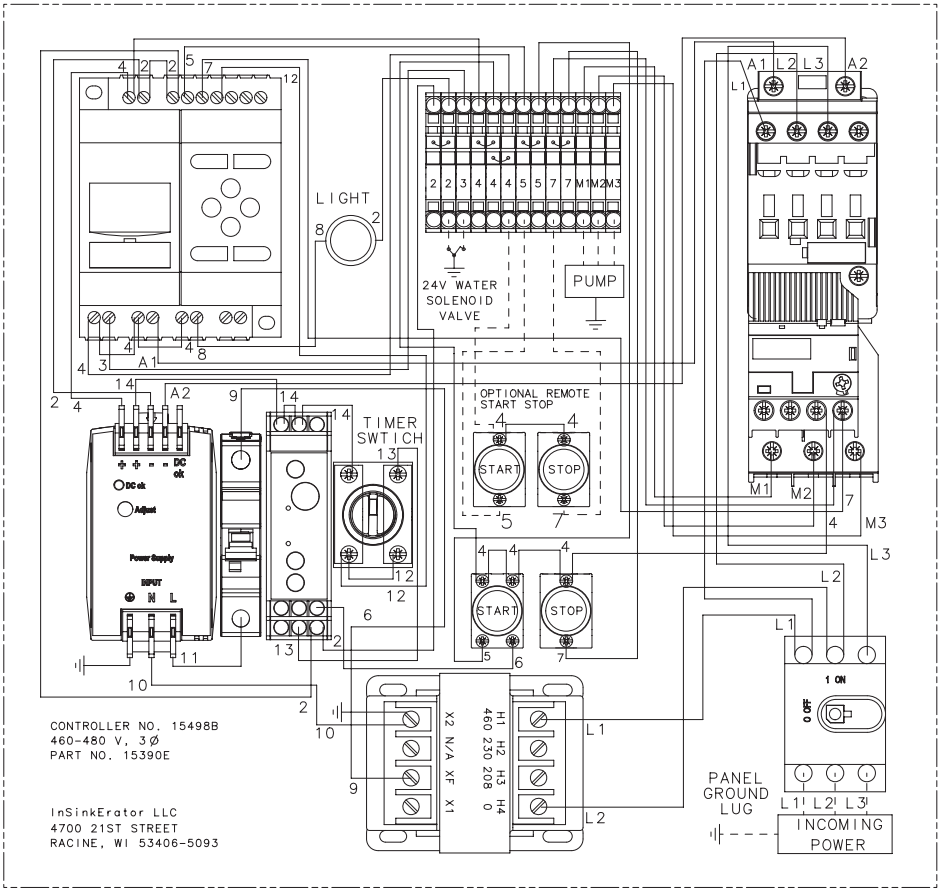


**Call Toll Free 1-800-845-8345 for the nearest InSinkErator Authorized Service Agency or to reach Technical Support.**

| Overload Settings | | |
|---|---|---|
| **Model** | **Current** | **Reset** |
| PRT-4 | 1.5 | Automatic |

## *Limited Warranty*

InSinkErator® (**"InSinkErator"** or **"Manufacturer"** or **"we"** or **"our"** or **"us"**) warrants to the original purchaser only ("Customer" or "you" or "your"), subject to the exclusions below, that your InSinkErator® (the **"InSinkErator Product"**) will be free from defects in material and workmanship for one year from the original date of purchase (the **"Warranty Period"**). This limited warranty terminates if the original purchaser transfers the InSinkErator Product to any other person or entity.

**What is Covered**

This limited warranty includes repair or replacement of your InSinkErator Product, accessories if included in the original InSinkErator Product package, and all replacement parts and labor costs if provided by an authorized InSinkErator service representative.

**What is not Covered**

This limited warranty does not extend to and expressly excludes:

- Losses or damages or the inability to operate your InSinkErator Product resulting from conditions beyond the Manufacturer's control including, without limitation, accident, alteration, misuse, abuse, neglect, or negligence (other than Manufacturer's).
- Wear and tear expected to occur during the normal course of use, including without limitation, cosmetic rust, scratches, dents or comparable and reasonably expected losses or damages.
- Failure to install, maintain, assemble, or mount the InSinkErator Product in accordance with Manufacturer's instructions or local electrical and plumbing codes, faulty or improper electrical installation, faulty or improper plumbing installation, clogged drain lines, or an improperly sized unit (as specified by InSinkErator).

**What we will do to Correct Problems**

To file a warranty claim during the Warranty Period, you may call Toll Free 1-800-845-8345 for the nearest InSinkErator Authorized Service Agency or to reach Technical Support, or you may visit our website at www.insinkerator.com.

The following information must be provided as part of your warranty claim: your name, address, phone number, your InSinkErator Product model and serial number. You will be required to submit supporting documentation of the date of purchase.

Manufacturer or its authorized service representative will determine, in its sole and absolute discretion, if your InSinkErator Product is covered under this limited warranty. Only an authorized InSinkErator service representative may provide warranty service. InSinkErator is not responsible for warranty claims arising from work performed on your InSinkErator Product by anyone other than an authorized InSinkErator service representative.

If a covered claim is made during the Warranty Period, Manufacturer will, through its authorized service representative, and at Manufacturer's or its authorized service representative's sole discretion, either repair or replace your InSinkErator Product. If your InSinkErator Product is replaced, the warranty on the replacement InSinkErator Product will be limited to the unexpired term remaining in the original Warranty Period. **YOUR SOLE AND EXCLUSIVE REMEDY UNDER THIS LIMITED WARRANTY SHALL BE LIMITED TO REPAIR OR REPLACEMENT OF THE INSINKERATOR PRODUCT.** This limited warranty is valid only in the United States and applies only when the InSinkErator Product is used in the country in which it was purchased. If outside the 50 United States, contact your authorized InSinkErator dealer to determine whether any warranty applies.

**No Other Express Warranty Applies**

**THE LIMITED WARRANTIES PROVIDED ABOVE ARE THE SOLE AND EXCLUSIVE WARRANTIES PROVIDED BY MANUFACTURER TO THE ORIGINAL PURCHASER, AND ARE IN LIEU OF ALL OTHER WARRANTIES, WRITTEN OR ORAL, EXPRESS OR IMPLIED, WHETHER ARISING BY OPERATION OF LAW OR OTHERWISE, INCLUDING, WITHOUT LIMITATION, WARRANTIES OF MERCHANTABILITY OR FITNESS FOR A PARTICULAR PURPOSE, WHETHER OR NOT THE PURPOSE HAS BEEN DISCLOSED AND WHETHER OR NOT THE INSINKERATOR PRODUCT HAS BEEN SPECIFICALLY DESIGNED OR MANUFACTURED FOR YOUR USE OR PURPOSE.**

**Limitation of Liability**

**TO THE EXTENT PERMITTED BY LAW, IN NO EVENT SHALL MANUFACTURER OR ITS AUTHORIZED SERVICE REPRESENTATIVES BE LIABLE FOR ANY INCIDENTAL, SPECIAL, INDIRECT, OR CONSEQUENTIAL DAMAGES, INCLUDING ANY ECONOMIC LOSS, WHETHER RESULTING FROM NONPERFORMANCE, USE, MISUSE OR INABILITY TO USE THE INSINKERATOR PRODUCT OR THE MANUFACTURER'S OR ITS AUTHORIZED SERVICE REPRESENTATIVE'S NEGLIGENCE. MANUFACTURER SHALL NOT BE LIABLE FOR DAMAGES CAUSED BY DELAY IN PERFORMANCE AND IN NO EVENT, REGARDLESS OF THE FORM OF THE CLAIM OR CAUSE OF ACTION (WHETHER BASED IN CONTRACT, INFRINGEMENT, NEGLIGENCE, STRICT LIABILITY, OTHER TORT OR OTHERWISE), SHALL MANUFACTURER'S LIABILITY TO YOU EXCEED THE PRICE PAID BY THE ORIGINAL OWNER FOR THE INSINKERATOR PRODUCT.**

The term "consequential damages" shall include, but not be limited to, loss of anticipated profits, business interruption, loss of use or revenue, cost of capital or loss or damage to property or equipment.

Some states do not allow the exclusion or limitation of incidental or consequential damages, so the above limitation may not apply to you. This warranty gives you specific legal rights and you may also have other rights which vary from state to state.

InSinkErator® may make improvements and changes in the specification at any time, in its sole discretion, without notice or obligation and further reserves the right to change or discontinue models.
©2023 InSinkErator®. All rights reserved.