PROJECT: _____ **ITEM NO.:** _____

POWERRINSE™ WASTE COLLECTION SYSTEM

The PowerRinse® Waste Collection System is a food waste handling solution that improves kitchen efficiency by increasing pre-rinse/scrapping speed and reducing bulk waste without grinding. It is an alternative to food waste disposer or pulper systems.

PRODUCT FEATURES & SPECIFICATIONS

PRE-RINSE & SCRAP DISHES IN ONE STEP

- Requires only 1 GPM (3.79 LPM) of fresh water per hour
- Capable of recirculating water up to 30 GPM (113.56 LPM)
- Fully operational in 70 seconds – protected against dry operation
- Easy access ball valve allows operators to quickly reposition water plume
- Scrap basket features ¼" (6.35 mm) diameter screen and ergonomic handles
- Collected solids can be disposed of into a waste or compost receptacle
- Two mountings: Standard Tray (for everyday applications) and Pot/Pan Tray (for oversized cookware, such as large sheet pans)
- Workspace-maximizing cover design creates a level foundation for scrapping and pre-soaking problem dishes with baked-on or difficult to remove food

SYSTEM OVERVIEW

- Tray, base assembly, cover, pump housing, and pump impeller all made from durable, corrosion-resistant stainless steel construction
- NEMA 4X stainless steel electrical control box
- High impact polymer scrap basket
- Pump safeguarded by ¼" (6.35 mm) inlet screen and dry-start protection
- Fits under standard table – minimum height 33" (838 mm)
- Flanged feet allow unit to be secured to floor

TIMED RUN OR CONTINUOUS RUN

- Built-in shut off timer automatically shuts off system after predetermined length of time (factory set at 20 minutes)
- System can be manually shut off at any time

CLEANING

- Quick and easy to clean – dishwasher safe components



Standard (Model PRS)
23.75" x 21.5" Tray
(603.25 mm x 546.1 mm)



Pot/Pan (Model PRP)
35.5" x 21.5" Tray
(901.7 mm x 546.1 mm)

1 YEAR ON-SITE PARTS & LABOR WARRANTY

MOUNTINGS/TRAY SIZES

TRAY WORKING AREA DIMENSIONS LISTED BELOW

☐ 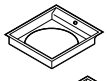 Standard, 23.75" x 21.5" (603.25 mm x 546.1 mm)

☐ 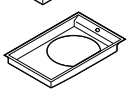 Pot/Pan, 35.5" x 21.5" (901.7 mm x 546.1 mm)

ACCESSORIES

ALL SYSTEMS INCLUDE: 1 SCRAP BASKET AND 1 COVER

☐  Additional Scrap Basket

☐  Additional Cover

ELECTRICAL SPECIFICATIONS

☐ 110-120V, 60 Hz, 1 Ph, 7 amps, **CUL**
☐ 208/220-240V, 60 Hz, 1 Ph, 3.3/3.5 amps, **CUL**
☐ 208/220-240V, 60 Hz, 3 Ph, 1.5/2 amps, **CUL**
☐ 460-480V, 60 Hz, 3 Ph, 1.1 amps, **CUL**

A complete collection of our product drawings is available for download at the **InSinkErator Revit/CAD** Library, which can be found at www.insinkerator.com/foodservice. Product information is also accessible on ***The KCL CADalog***. More information is available from KCL at www.kclcad.com.

insinkerator
1250 International Drive
Mount Pleasant, WI 53177
TEL: 800-845-8345

www.insinkerator.com/foodservice

c UL us LISTED ISO 9001 QUALITY SYSTEMS CERTIFIED

InSinkErator © 2023 Printed in USA Form No. F491-23C-83-85

SYSTEM COMPONENTS

Includes the following (see Figures 1 and 2):

a. Tray
   - Standard Tray (only Model PRS)

   OR
   - Pot/Pan Tray (only Model PRP)

b. Scrap Basket
c. Cover
d. Plume Hose
e. Waste Collector Base Assembly
f. Waste Collector Tank and Mounting Assembly
g. Control (Pre-wired)
h. Solenoid (Pre-wired)
i. Pump (Pre-wired)
j. Air Gap
k. Ball Valve
l. Leveling Flange Feet
m. 2" Drain Discharge
n. 1/2" NPT Water Inlets (Hot and Cold Connections)
o. Installation, Care, and Use Manual
p. Mounting Hardware
   - Lock Washers (12)
   - 1/4"-20 Nuts (12)

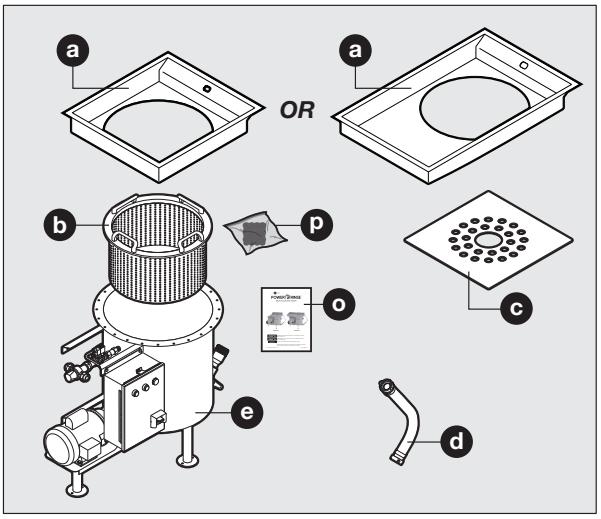

Figure 1. System Components

Required for installation:

- ☐ Screwdriver
- ☐ Pipe wrench
- ☐ 7/16" wrench or socket
- ☐ Tools and materials necessary to install the power line, drain line, and the hot and cold water
- ☐ 1/2" wrench or socket (*OPTIONAL* – if repositioning the control)

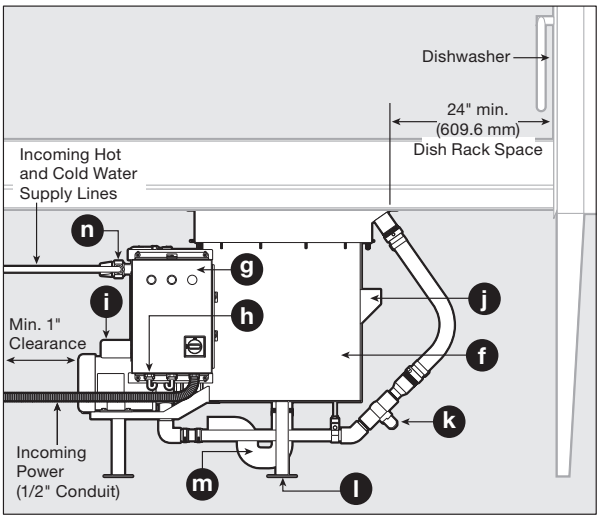

Figure 2. Typical Installation

SYSTEM DIMENSIONS

NOTICE

The PowerRinse® Waste Collection System pump motor fan must have a minimum of 1" of clearance from any wall or obstruction in order to operate correctly.

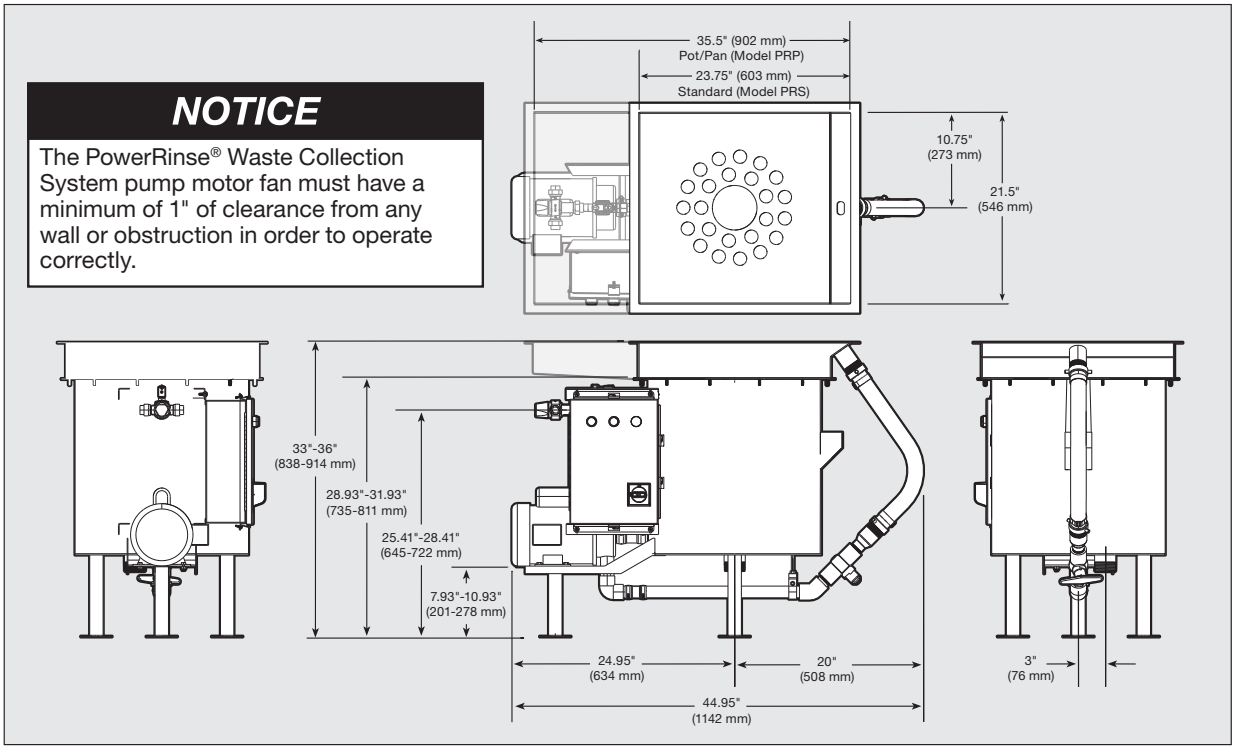

Figure 3. PowerRinse® Waste Collection System Dimensions

TABLE CUTOUT DIMENSIONS

Use the dimensions from Figure 4 for Standard (Model PRS) table cutout and Figure 5 for Pot/Pan (Model PRP) table cutout. Weld the waste collector tray to the underside of the table so the water nozzle is on the same side as the dishwasher.

- If using in-line with a dishwasher, it is recommended to mount the waste collector tray a minimum of 24" (609.6 mm) away from the loading end of the dishwasher to allow enough table space for a dish rack.

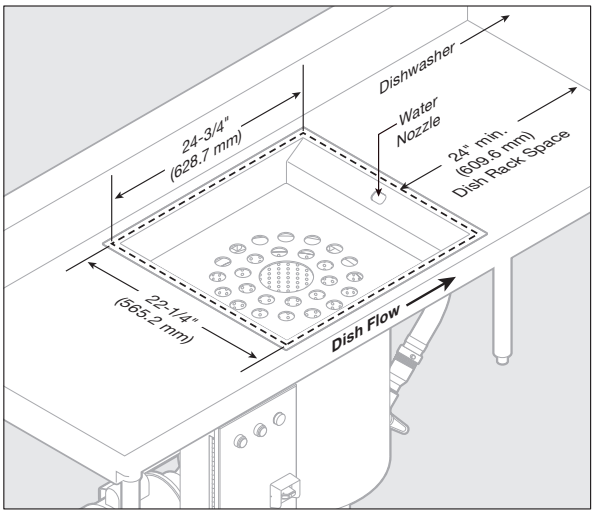

Figure 4. Table Cutout – Standard (Model PRS)

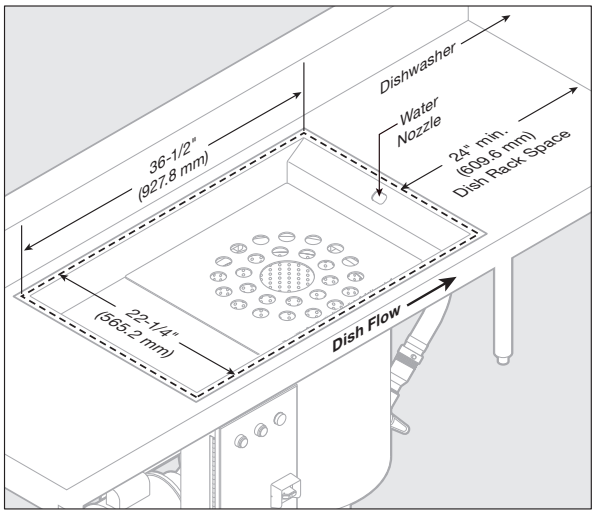

Figure 5. Table Cutout – Pot/Pan (Model PRP)

GENERAL NOTES

- Install the waste collector per the Instruction, Care, and Use manual.
- The pump motor fan must have a minimum of 1" of clearance from any wall or obstruction in order to operate correctly.
- Scrap basket is 18.8" dia. x 12.25" (477.52 mm dia. x 311.15 mm) (includes handle height) and 21" (533.4 mm) minimum clearance overhead recommended for removal.
- Tray may be shipped separately to table fabricator.
- The waste collector base assembly is shipped with the control factory-installed on the left side of the tank for left-to-right dish flow.

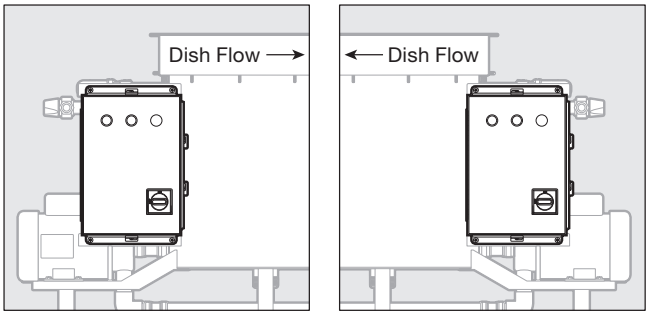

Figure 6. Dish Flow and Control Position

- The controller can be located on either side to ensure the control is on the proper side of the tank to correspond with dish flow and face the operator.
- Use of cover (21" x 21") (533.4 mm x 533.4 mm) is optional but recommended to maximize workspace inside tray.
- When using Pot/Pan (Model PRP), the cover fits in the square, flat area at the bottom of the tray.
- It is recommended that the waste collector be cleaned daily at end of shift, and as needed throughout the day. Rinse cover, scrap basket, tray, and tank interior. Scrap basket may be run through dishwasher.
- DO NOT use corrosive chemicals for scrapping or cleaning.

PLUMBING NOTES

- 1/2" NPT hot and cold water supply lines to mixer valve.
- Mixer valve includes internal check valves.
- Hot and cold water lines must match the markings on mixer valve. If lines are reversed, mixer valve will not operate properly after adjustment.
- The mixer valve may be relocated if necessary. When positioning the mixer valve, ensure it is accessible by end user if temperature adjustment is needed.
- It is recommended that ball type shutoff valves be installed in-line with the cold and hot water lines.
- A minimum of 30 psi (206.8 kPa) at the mixer valve is needed for the waste collector to operate correctly.
- If water pressure exceeds the allowable pressure of 80 psi (551.6 kPa), pressure regulators should be used.
- 2" NPT drain connection (recommended to plumb through a P-trap).
- The integrated air gap on the waste collector tank meets ASME A112.1.2-2012 standard and eliminates the need for a vacuum breaker installed with the system.

TYPICAL INSTALLATIONS – Standard (Model PRS)

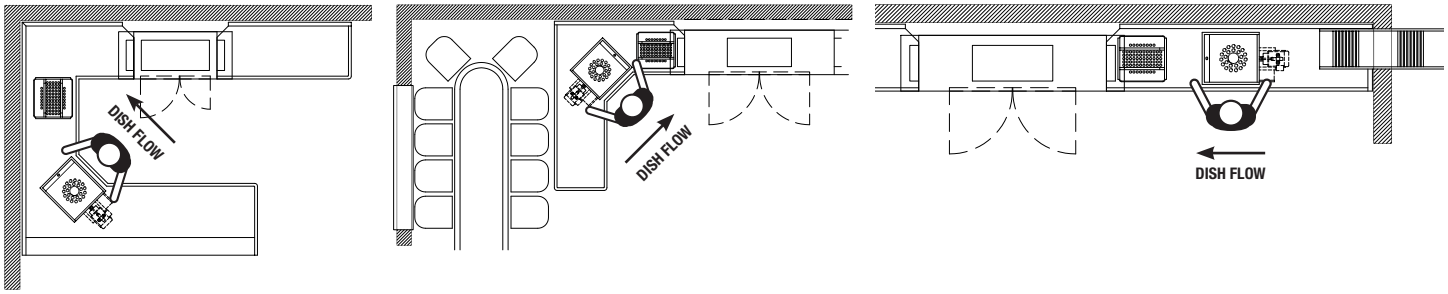

TYPICAL INSTALLATIONS – Pot/Pan (Model PRP)

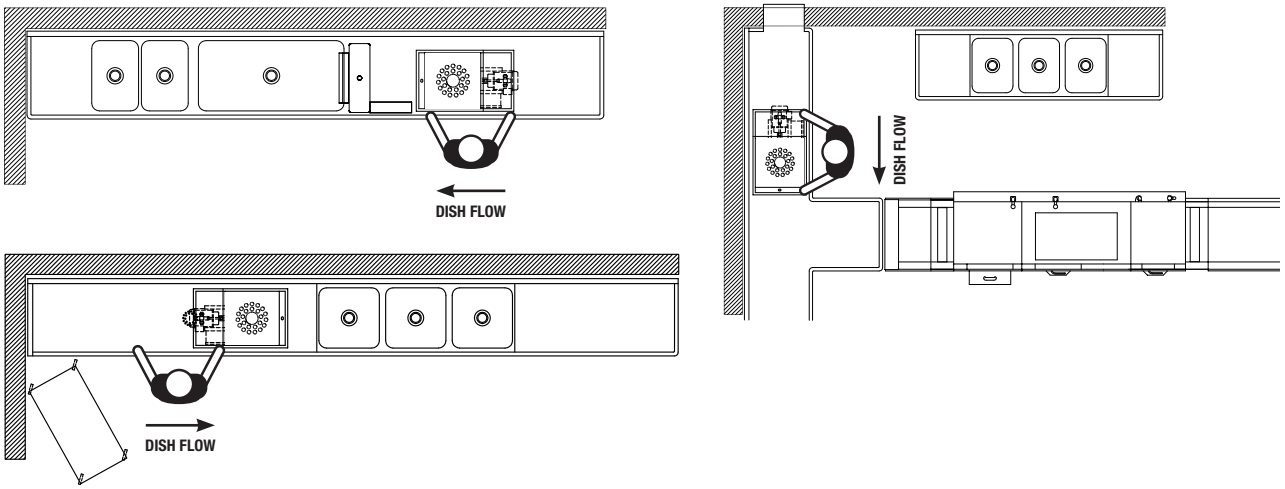

SAMPLE SPECIFICATION

- InSinkErator PowerRinse Model PRS (or PRP). P re-rinse and scrapping system with 30 GPM recirculated water flow capability, dry start protection, and adjustable run time. ___ Volts, 60 Hz, ___ Phase operation. Pre-plumbed and pre-wired base assembly with control, solenoid and pump; integrated air gap; stainless-steel mounting tray, base assembly, cover, pump housing, 1/4" pump inlet screen, and pump impeller; 1/4" perforated scrap basket; flanged feet; check valves; 2" drain discharge; 1/2" NPT water inlets.

PROJECT INFORMATION

Item Number: _____

Quantity: _____

Manufacturer: InSinkErator

Model Number: _____

Electrical Requirements:

_____ volts _____ phase

Project: _____

Address: _____

City/State/Zip: _____

Contact: _____

Phone: _____

Dealer: _____

City/State/Zip: _____

Contact: _____

Phone: _____

Installer: _____

Contact: _____

Phone: _____

Consultant: _____

Contact: _____

Phone: _____

InSinkErator® may make improvements and changes in the specification at any time, in its sole discretion, without notice or obligation and further reserves the right to change or discontinue models. ©2023 InSinkErator®. All rights reserved.