LC-50 FOOD WASTE DISPOSER
Installation Manual



⚠ DANGER The *Danger* signal indicates an immediately hazardous situation which, if not avoided, **will** result in death or serious injury.

⚠ WARNING The *Warning* signal alerts you to potential hazards or unsafe practices which, if not avoided, **could** result in severe personal injury or death.

⚠ CAUTION The *Caution* signal alerts you to hazards of unsafe practices which, if not avoided, **may** result in minor personal injury or property damage.

Please be certain that the person who installs or uses this appliance carefully reads and understands the Safety Instructions contained in this manual.

Table of Contents

Introduction
- Clean the Drain Line 3
- Required Tools/Materials 3

In This Package 3

Typical Installation 4
- Installation with Wall Switch 4
- Installation with Remote Air Switch 4

Removing Existing Disposer 5-6

Installing the Disposer 6-7

Electrical Connections 8

Final Installation 9

Operating Instructions
- Operating the Disposer 10
- Do's and Dont's 10
- Operating Instructions 11

Troubleshooting
- Troubleshooting 12
- For Dishwasher or Direct Water Connection 13

Warranty 14

Introduction

The model LC-50 food waste disposer is designed specifically for light foodservice use in applications such as:

- Grocery/convenience stores
- Office/church kitchens
- Fast food restaurants
- Bed and breakfast inns

Important – These installation instructions are for the benefit of the installing contractor. InSinkErator and/or InSinkErator Factory Authorized Service Centers do not make original installations. For technical information not covered in these instructions, contact the supplier, an InSinkErator Field Sales Representative, or InSinkErator Foodservice Sales and Service at 1-800-845-8345.

CLEAN THE DRAIN LINE

With a drain line auger, clear away all hardened waste material in the horizontal drain pipe running from the drain trap to the main waste line.

REQUIRED TOOLS/MATERIALS

The following items are needed to install the disposer:

- Screwdriver
- Pipe wrench
- Hammer

The following items may be needed to install the disposer:

- Plumbing putty
- On/Off electrical switch (1/2 HP, 20A DP)
- Hacksaw
- Drain auger or rod
- Connector kit (Part #8301)
- Solenoid valve (Part #14495)
- Siphon breaker (Part #11477)
- Flow-control valve (Part #13763A)

In This Package

Disposer

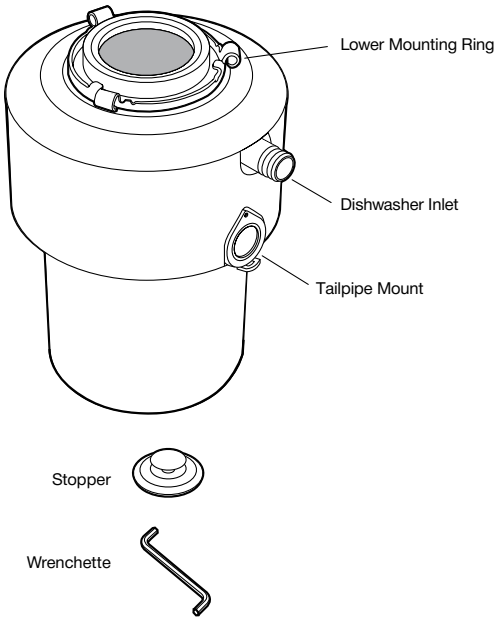

Mounting Assembly

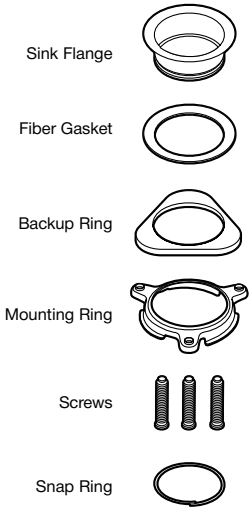

Discharge Tube Assembly

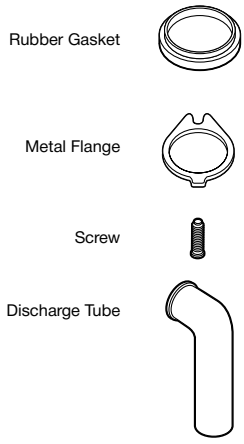

Typical Installation

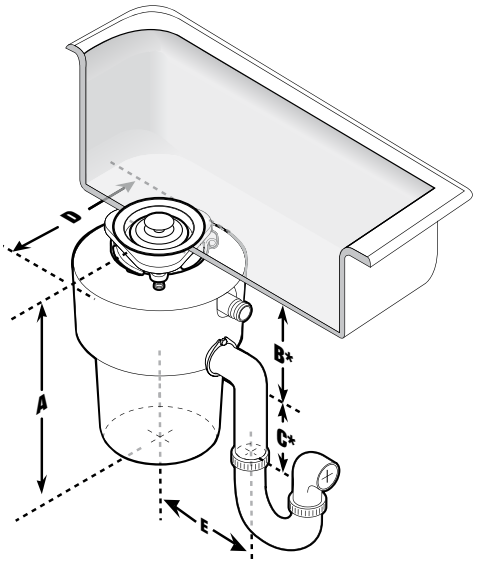

Dimension	A	B*	C*	D	E
Inches	14-9/16	6-13/16	4	8	5-3/4
Cm	37.0	17.3	10.2	20.3	14.6

B* – Distance from bottom of sink to center line of disposer outlet. Add 1/2" (13mm) when stainless steel sinks are used.

C* – Length of discharge tube from center line of disposer outlet to end of discharge tube.

Important – Plumb waste line to prevent standing water in disposer motor housing.

INSTALLATION WITH WALL SWITCH

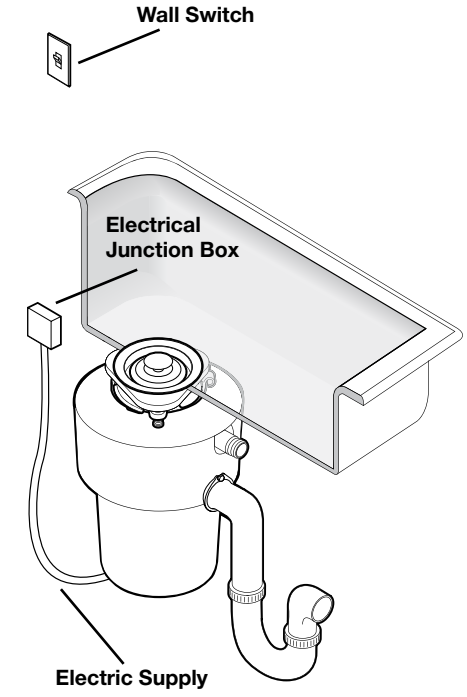

INSTALLATION WITH REMOTE AIR SWITCH AND OPTIONAL DIRECT WATER CONNECTION

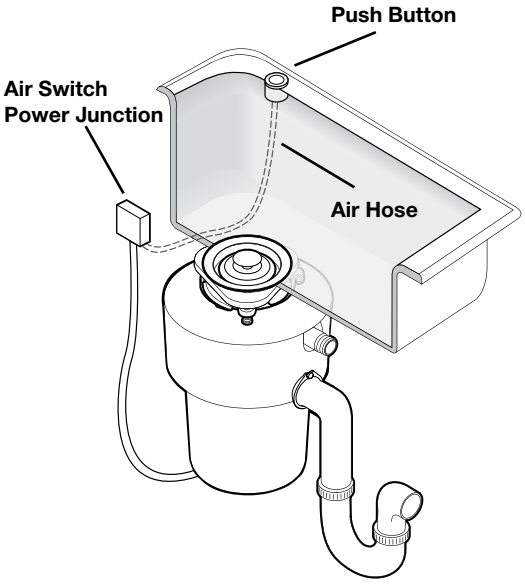

Removing Existing Disposer

⚠ WARNING

ELECTRICAL SHOCK

Disconnect power before installing or servicing unit. Test the circuit with a voltmeter or circuit tester to ensure the power is off.

⚠ WARNING

FALLING HAZARD

Do not position your head or body under the disposer. It could fall during installation.

If there is no existing disposer, disconnect sink drain and skip to step 9.

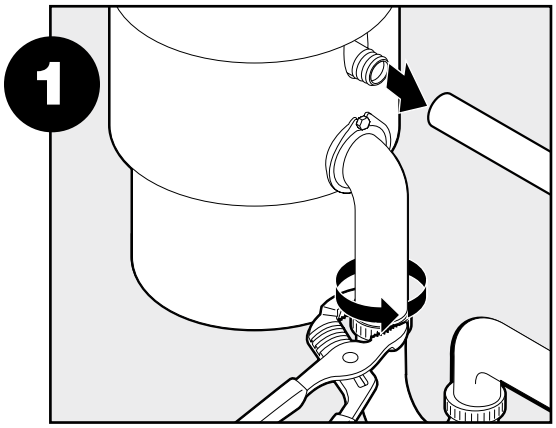

Disconnect drain trap from waste discharge tube. Disconnect dishwasher or direct water connection if connected to the disposer.

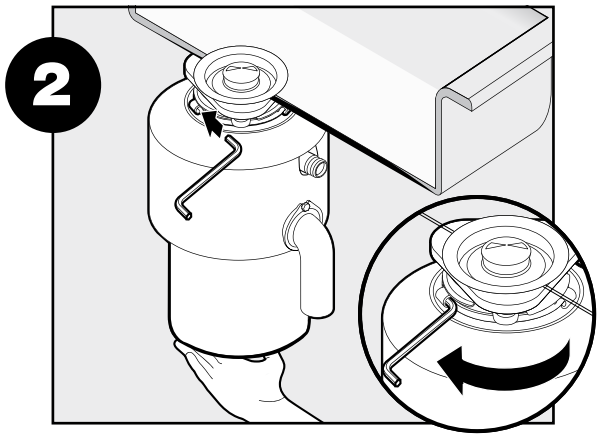

Support disposer, insert end of wrenchette into right side of mounting lug, and turn. Disposer will fall free.

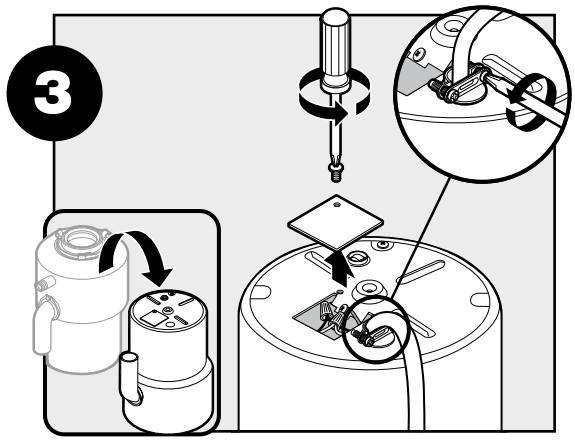

With the electrical supply turned off, flip disposer over and remove electrical cover plate. Save cable connector if applicable.

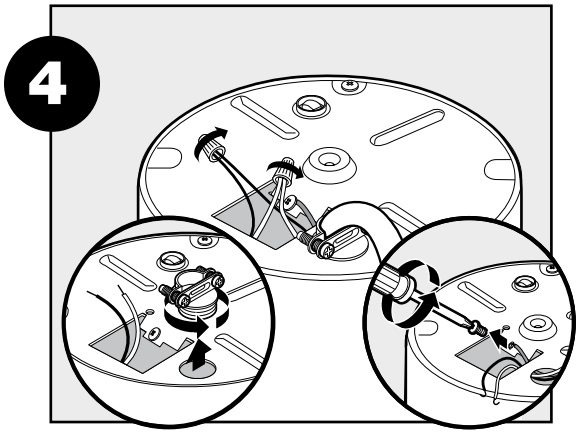

With the electrical supply turned off, disconnect the disposer wires from the electrical supply.

Removing Existing Disposer

If the new disposer mounting is the same as the old one, you can go to step 14.

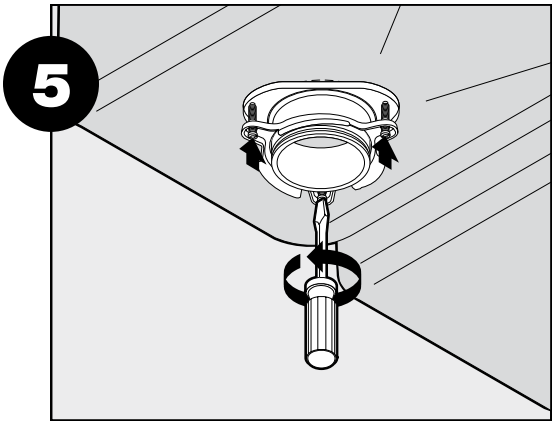

Loosen the 3 screws on the mounting assembly.

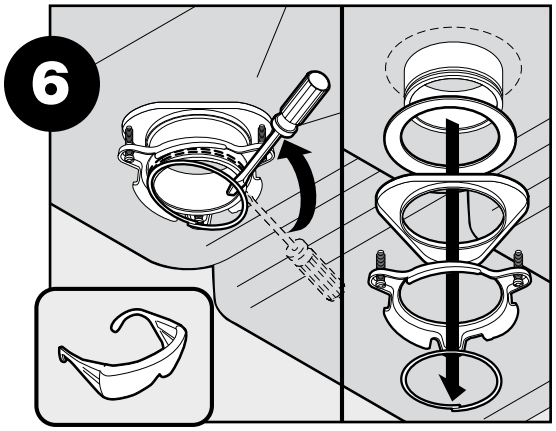

Using a screwdriver, remove the snap ring.

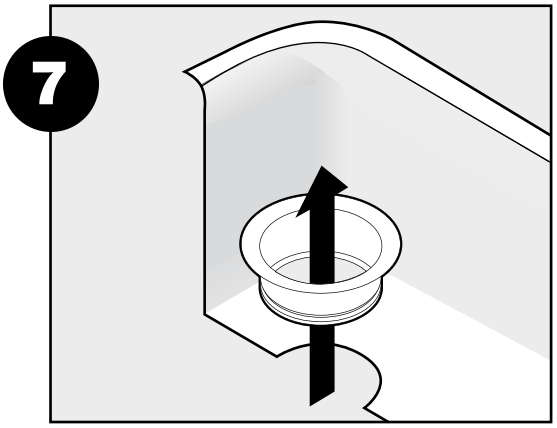

Remove flange from sink.

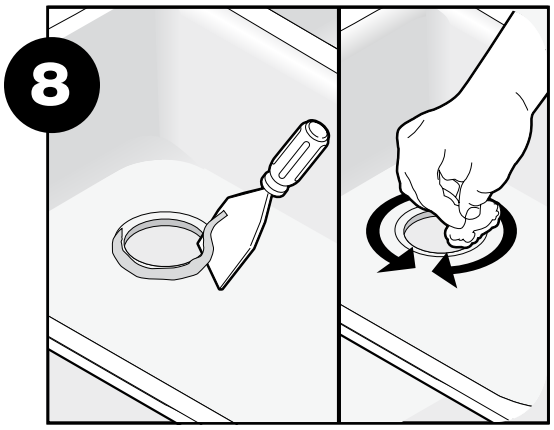

Remove old plumber's putty from sink with putty knife.

Installing the Disposer

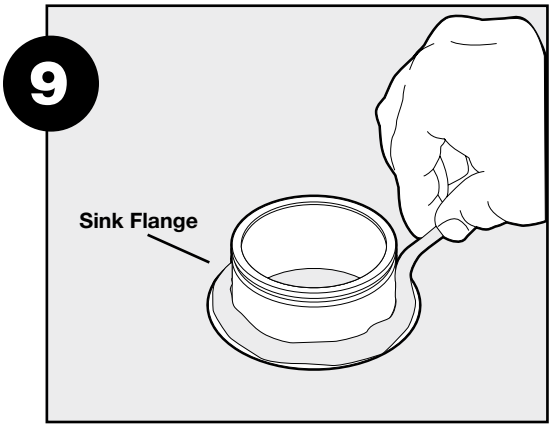

Evenly apply 1/2" thick rope of plumber's putty around new flange.

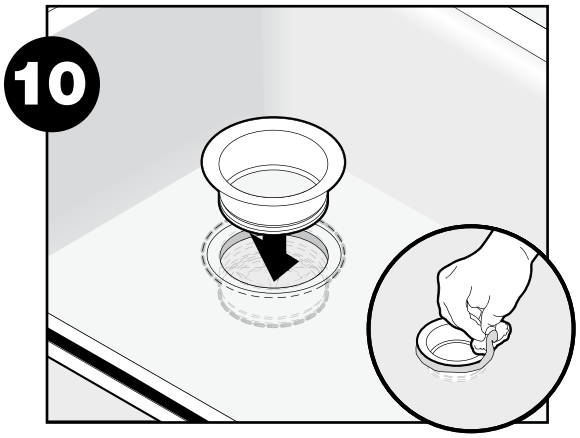

Press flange firmly into sink drain. Remove excess putty.

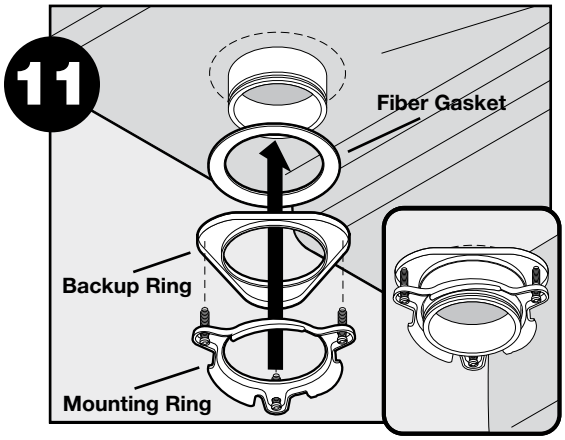

Insert fiber gasket, backup ring and mounting ring. Hold in place while inserting snap ring.

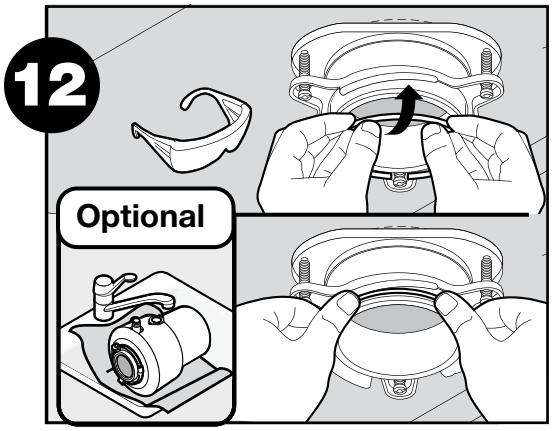

Place a weight such as the disposer on the sink flange to hold it in place. Use a towel to prevent scratching sink. Pull snap ring open and press firmly until it snaps into place.

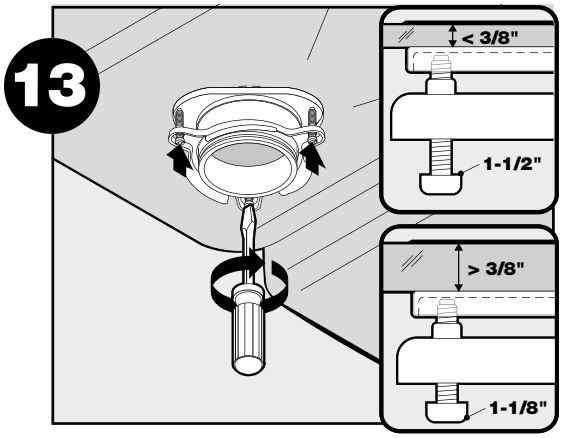

Tighten screws evenly and firmly against backup flange. Use shorter 1-1/8" screws if sink is more than 3/8"thick.

OPTIONAL: DISHWASHER OR DIRECT WATER CONNECTION ONLY

If you do not need to attach the dishwasher or direction water connection, go to step 16.

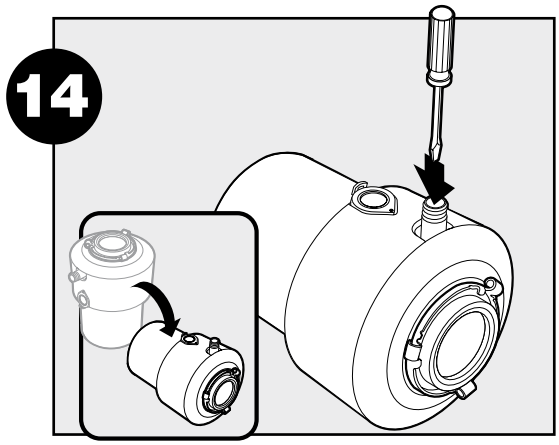

Turn disposer onto side and insert screwdriver into dishwasher inlet.

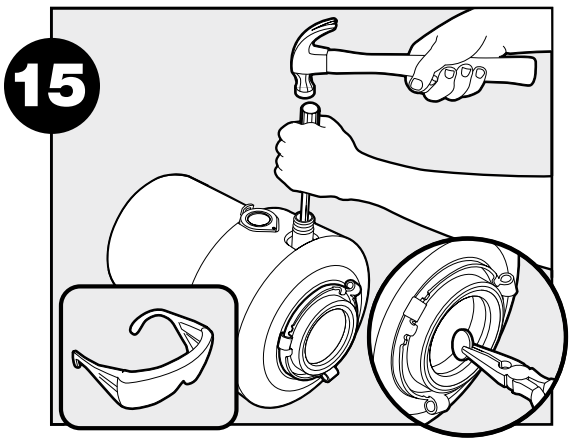

Knock out drain plug and remove plug from inside of disposer.

Electrical Connections

⚠ WARNING

ELECTRICAL SHOCK

- Disconnect power before installing or servicing unit. Test the circuit with a voltmeter or circuit tester to ensure the power is off.
- Use only a properly grounded and polarized electric outlet.
- Improper connection of the equipment-grounding conductor can result in a risk of electric shock.
- Installation must conform to all local electrical codes.
- All control centers and disposers must be grounded.

⚠ WARNING

PERSONAL INJURY/PROPERTY DAMAGE

If the electrical installer is not experienced in electrical installation, we recommend seeking competent professional assistance. Disposer or accessory damage due to improper installation is not covered under warranty. All installations must comply with local electrical codes.

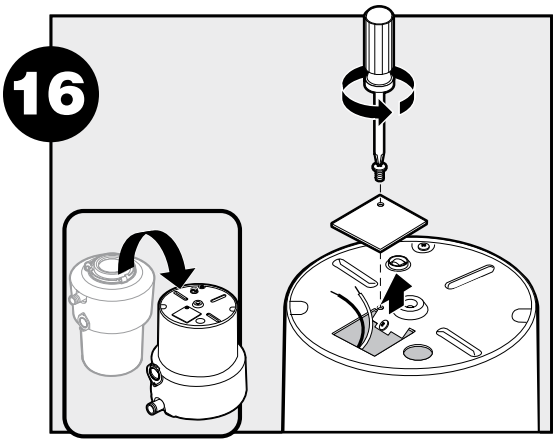

Turn disposer over and remove electrical cover plate. Pull out wires. DO NOT REMOVE CARDBOARD SHIELD.

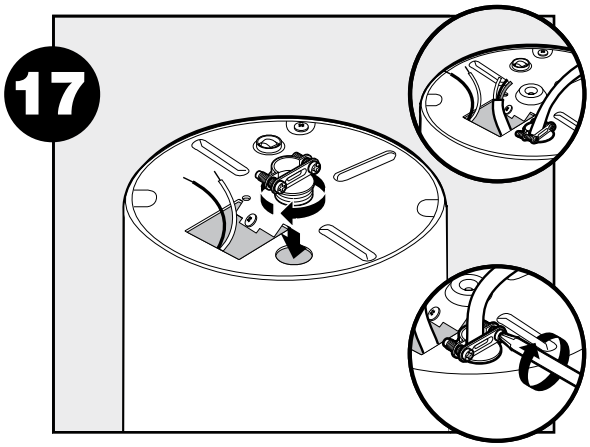

With electrical supply turned off, insert cable connector (not included) and run electrical cable through access hole on bottom of disposer. Tighten cable connector.

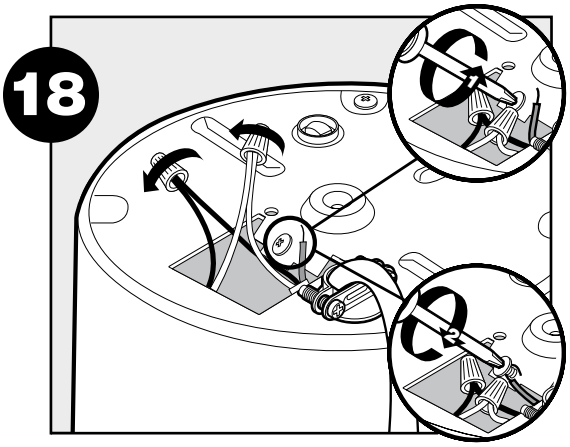

Connect white to white and black to black or red with wire nuts (not included); ground wire to green grounding screw. Unit must be grounded for safe and proper installation.

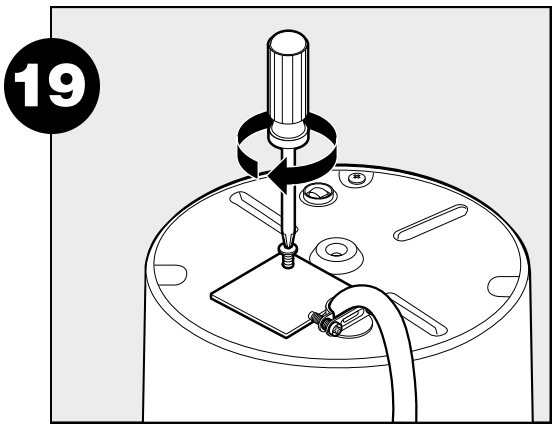

Push wires into disposer **(do not displace cardboard shield)** and replace electrical cover plate.

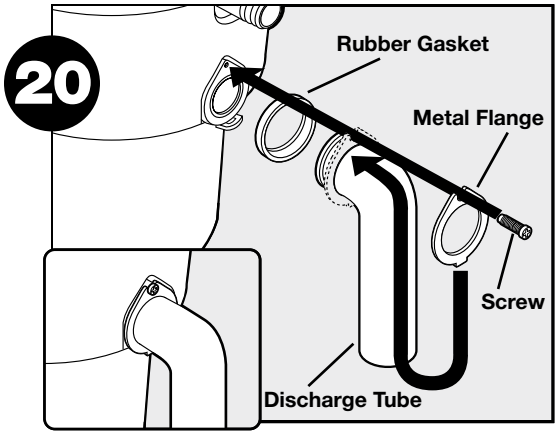

Rotate the disposer around. Place the rubber gasket on the end of the discharge tube and slide on the metal flange from the reverse end. Place assembled discharge tube in the tailpipe mount opening and secure with screw provided.

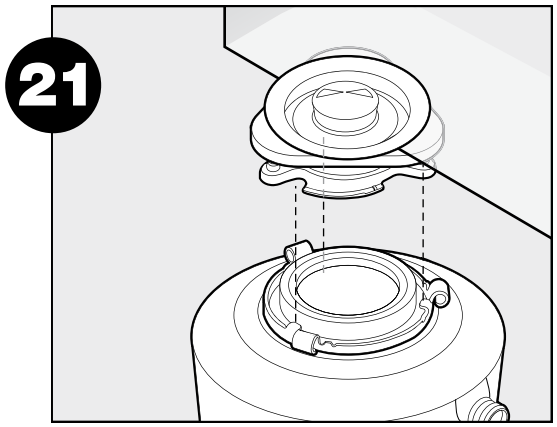

Hang disposer by aligning 3 mounting tabs with slide-up ramps on mounting ring.

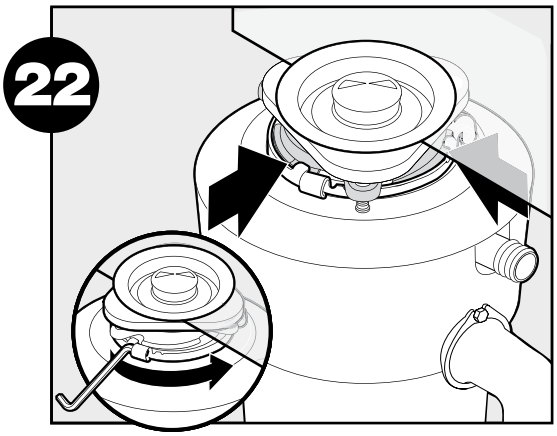

Turn mounting ring until all 3 mounting tabs lock over the ridges on the slide-up ramps.

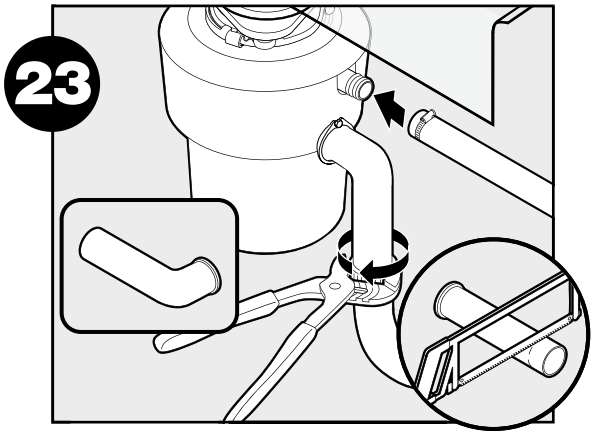

You may need to trim tube for proper fit. Reconnect plumbing (and dishwasher or direct water connection if used). Make sure tailpipe mount is straight.



Insert stopper into sink opening. Fill sink with water, then test for leaks.

Important – The model LC-50 is designed specifically for light commercial use. Examples of these applications include: grocery/convenience store delis, fast food restaurants, office/church kitchens, and bed and breakfast inns. Use of this disposer in applications other than those named above may void your warranty.

OPERATING THE DISPOSER

1. Remove stopper from sink opening and run strong flow of cold water.
2. Turn on wall switch to start disposer.
3. Slowly insert food waste into disposer and position stopper to minimize possible ejection of material while grinding. After grinding is complete, turn disposer off and run water for a few seconds to flush drain line.

DO'S AND DON'TS

DO …

- First turn on a moderate to strong flow of cold water and then turn on the disposer. Continue running cold water for a few seconds after grinding is completed to flush the drain line.
- Grind hard materials such as small bones, fruit pits, and ice. A scouring action is created by the particles inside the grind chamber.
- Grind peelings from citrus fruits to freshen up drain smells.
- Use a disposer cleaner, degreaser, or deodorizer as necessary to relieve objectionable odors caused by grease build-up.

DON'T …

- Don't pour grease or fat down your disposer or any drain. It can build up in pipes and cause drain blockages. Put grease in a jar or can and dispose in the trash.
- Don't use hot water when grinding food waste. It is OK to drain hot water into the disposer between grinding periods.
- Don't fill disposer with a lot of vegetable peels all at once. Instead, turn the water and disposer on first and then feed the peels in gradually.
- Don't grind large amounts of egg shells or fibrous materials like corn husks, artichokes, etc., to avoid possible drain blockage.
- Don't turn off disposer until grinding is completed and only sound of motor and water is heard.

⚠ WARNING

PERSONAL INJURY

- Read all instructions before using the appliance.
- To reduce the risk of injury, close supervision is required when an appliance is used near children.
- Do not put fingers or hands into a waste disposer.
- Turn the power switch to the off position before attempting to clear a jam, removing an object from the disposer or pressing reset button.
- When attempting to loosen a jam in a waste disposer, use the self-service wrenchette.
- When attempting to remove objects from a waste disposer, use long-handled tongs or pliers.
- To reduce the risk of injury by materials that are expellable by a waste disposer, do not operate the disposer without the Quiet Collar Sink Baffle in place.
- Do not put the following into a disposer: clam or oyster shells, caustic drain cleaners or similar products, glass, china, or plastic, large (whole) bones, metal (such as bottle caps, steel shot, tin cans, or utensils), hot grease or other hot liquids.
- Do not dispose of the following in the disposer: paints, solvents, household cleaners and chemicals, automotive fluids, plastic wrap.

⚠ DANGER

FIRE HAZARD

Do not store flammable items such as rags, paper or aerosol cans near disposer. Do not store or use gasoline or other flammable vapors and liquids in vicinity of disposer.

⚠ WARNING

ELECTRICAL SHOCK

Improper connection of the equipment-grounding conductor can result in a risk of electric shock.

- This disposer must be properly grounded.
- Do not attach ground wire to gas supply line.
- Disconnect power before installing or servicing disposer.
- If three-prong grounded plug is used, plug must be inserted into three-hole ground receptacle.
- All wiring must comply with local electrical codes.
- Do not reconnect electrical current at main service panel until proper grounds are installed.

⚠ CAUTION

PROPERTY DAMAGE

Do not use plumber's putty on any other disposer connection other than sink flange. Do not use thread sealants or pipe dope. These may harm disposer and cause property damage.

⚠ WARNING

ELECTRICAL SHOCK
Disconnect power before servicing.

Troubleshooting for problems other than what is listed below should be performed by a qualified service person. Troubleshooting performed by untrained personnel could result in electrical shock or damage to the disposer. Disconnect power before servicing.

PROBLEM	POSSIBLE CAUSE	SOLUTION
Disposer will not start.	• No electrical supply.	• Turn on electrical supply.
	• Disposer overload protector is tripped.	• Turn control to off position and press red reset button on disposer.
	• Disposer is jammed.	• Turn control to off position and complete following steps: 1. Insert one end of self-service wrenchette into center hole on bottom of disposer. Work wrenchette back and forth until it turns one full revolution. Remove wrenchette. 2. Reach into disposer with tongs and remove object(s). Allow disposer motor to cool for 3-5 minutes, then lightly push red reset button on disposer bottom. (If motor remains inoperative, check service panel for tripped circuit breakers or blown fuses.)
Disposer motor stops while grinding.	• Disposer is jammed.	• See "Disposer is jammed," above.
	• Disposer overload protector is tripped.	• Turn control to off position and press red reset button on disposer. If disposer was running, allow unit to cool 3-5 minutes before pressing red reset button. Never strike reset button with objects.
Overload protector trips frequently.	• Disposer is overloaded with food waste.	• Do not overload disposer with excessive amounts of food waste.

⚠ WARNING

ELECTRICAL SHOCK
Disconnect power before servicing.

FOR OPTIONAL DISHWASHER OR DIRECT WATER CONNECTION

Troubleshooting for problems other than what is listed below should be performed by a qualified service person. Troubleshooting performed by untrained personnel could result in electrical shock or damage to the disposer. Disconnect power before servicing.

PROBLEM	POSSIBLE CAUSE	SOLUTION
Disposer will not start and water does not flow.	• No electrical supply. • Electrical disconnect switch has been reactivated and 30-second delay has not yet expired.	• Turn on electrical supply. • Wait 30 seconds and try starting again.
Disposer will not start but water flows.	• Disposer overload protector is tripped. • Disposer is jammed.	• Turn control to off position and press red reset button on disposer. • Turn control to off position and complete following steps: 1. Insert one end of self-service wrenchette into center hole on bottom of disposer. Work wrenchette back and forth until it turns one full revolution. Remove wrenchette. 2. Reach into disposer with tongs and remove object(s). Allow disposer motor to cool for 3-5 minutes, then lightly push red reset button on disposer bottom. (If motor remains inoperative, check service panel for tripped circuit breakers or blown fuses.)
Disposer motor stops while grinding, but water continues to flow.	• Disposer is jammed. • Disposer overload protector is tripped.	• See "Disposer is jammed," above. • Turn control to off position and press red reset button on disposer. If disposer was running, allow unit to cool 3-5 minutes before pressing red reset button. Never strike reset button with objects.
Water flows continuously before controls are turned on.	• Solenoid and valve are installed improperly.	• Reinstall water solenoid valve with arrow on valve pointing in direction of the water flow.
Disposer runs but no water flows.	• No water supply. • Solenoid valve isn't opening.	• Turn on water supply. • Call qualified service personnel.

Limited Warranty

InSinkErator® (**"InSinkErator"** or **"Manufacturer"** or **"we"** or **"our"** or **"us"**) warrants to the original purchaser only ("Customer" or "you" or "your"), subject to the exclusions below, that your InSinkErator® (the **"InSinkErator Product"**) will be free from defects in material and workmanship for one year from the original date of purchase (the **"Warranty Period"**). This limited warranty terminates if the original purchaser transfers the InSinkErator Product to any other person or entity.

What is Covered

This limited warranty includes repair or replacement of your InSinkErator Product, accessories if included in the original InSinkErator Product package, and all replacement parts and labor costs if provided by an authorized InSinkErator service representative.

What is not Covered

This limited warranty does not extend to and expressly excludes:

- Losses or damages or the inability to operate your InSinkErator Product resulting from conditions beyond the Manufacturer's control including, without limitation, accident, alteration, misuse, abuse, neglect, or negligence (other than Manufacturer's).
- Wear and tear expected to occur during the normal course of use, including without limitation, cosmetic rust, scratches, dents or comparable and reasonably expected losses or damages.
- Failure to install, maintain, assemble, or mount the InSinkErator Product in accordance with Manufacturer's instructions or local electrical and plumbing codes, faulty or improper electrical installation, faulty or improper plumbing installation, clogged drain lines, or an improperly sized unit (as specified by InSinkErator).

What we will do to Correct Problems

To file a warranty claim during the Warranty Period, you may call Toll Free 1-800-845-8345 for the nearest InSinkErator Authorized Service Agency or to reach Technical Support, or you may visit our website at www.insinkerator.com.

The following information must be provided as part of your warranty claim: your name, address, phone number, your InSinkErator Product model and serial number. You will be required to submit supporting documentation of the date of purchase.

Manufacturer or its authorized service representative will determine, in its sole and absolute discretion, if your InSinkErator Product is covered under this limited warranty. Only an authorized InSinkErator service representative may provide warranty service. InSinkErator is not responsible for warranty claims arising from work performed on your InSinkErator Product by anyone other than an authorized InSinkErator service representative.

If a covered claim is made during the Warranty Period, Manufacturer will, through its authorized service representative, and at Manufacturer's or its authorized service representative's sole discretion, either repair or replace your InSinkErator Product. If your InSinkErator Product is replaced, the warranty on the replacement InSinkErator Product will be limited to the unexpired term remaining in the original Warranty Period. **YOUR SOLE AND EXCLUSIVE REMEDY UNDER THIS LIMITED WARRANTY SHALL BE LIMITED TO REPAIR OR REPLACEMENT OF THE INSINKERATOR PRODUCT.** This limited warranty is valid only in the United States and applies only when the InSinkErator Product is used in the country in which it was purchased. If outside the 50 United States, contact your authorized InSinkErator dealer to determine whether any warranty applies.

No Other Express Warranty Applies

THE LIMITED WARRANTIES PROVIDED ABOVE ARE THE SOLE AND EXCLUSIVE WARRANTIES PROVIDED BY MANUFACTURER TO THE ORIGINAL PURCHASER, AND ARE IN LIEU OF ALL OTHER WARRANTIES, WRITTEN OR ORAL, EXPRESS OR IMPLIED, WHETHER ARISING BY OPERATION OF LAW OR OTHERWISE, INCLUDING, WITHOUT LIMITATION, WARRANTIES OF MERCHANTABILITY OR FITNESS FOR A PARTICULAR PURPOSE, WHETHER OR NOT THE PURPOSE HAS BEEN DISCLOSED AND WHETHER OR NOT THE INSINKERATOR PRODUCT HAS BEEN SPECIFICALLY DESIGNED OR MANUFACTURED FOR YOUR USE OR PURPOSE.

Limitation of Liability

TO THE EXTENT PERMITTED BY LAW, IN NO EVENT SHALL MANUFACTURER OR ITS AUTHORIZED SERVICE REPRESENTATIVES BE LIABLE FOR ANY INCIDENTAL, SPECIAL, INDIRECT, OR CONSEQUENTIAL DAMAGES, INCLUDING ANY ECONOMIC LOSS, WHETHER RESULTING FROM NONPERFORMANCE, USE, MISUSE OR INABILITY TO USE THE INSINKERATOR PRODUCT OR THE MANUFACTURER'S OR ITS AUTHORIZED SERVICE REPRESENTATIVE'S NEGLIGENCE. MANUFACTURER SHALL NOT BE LIABLE FOR DAMAGES CAUSED BY DELAY IN PERFORMANCE AND IN NO EVENT, REGARDLESS OF THE FORM OF THE CLAIM OR CAUSE OF ACTION (WHETHER BASED IN CONTRACT, INFRINGEMENT, NEGLIGENCE, STRICT LIABILITY, OTHER TORT OR OTHERWISE), SHALL MANUFACTURER'S LIABILITY TO YOU EXCEED THE PRICE PAID BY THE ORIGINAL OWNER FOR THE INSINKERATOR PRODUCT.

The term "consequential damages" shall include, but not be limited to, loss of anticipated profits, business interruption, loss of use or revenue, cost of capital or loss or damage to property or equipment.

Some states do not allow the exclusion or limitation of incidental or consequential damages, so the above limitation may not apply to you. This warranty gives you specific legal rights and you may also have other rights which vary from state to state.

InSinkErator® may make improvements and changes in the specification at any time, in its sole discretion, without notice or obligation and further reserves the right to change or discontinue models.
©2023 InSinkErator®. All rights reserved.