SHOWROOM COLLECTION

INSTANT HOT WATER TANK

HWT200
HWT200-F1000S



FEATURES:

- Instant hot water tank dispenses 208°F water
- Available tank only (HWT200) or tank with F1000S filtration system (HWT200-F1000S)
- For use with InSinkErator instant hot water dispensers and filtration systems
- Heating and at-temperature LED indicators
- Adjustable thermostat from 120°F - 208°F
- Precise temperature control +/- 2°F
- Tool-free tank connections and dry start protection
- Sound proofing for ultra-quiet performance
- Unit not for commercial/industrial use

MATERIAL:

- 100% welded/brazed, 316L premium 2/3 gallon stainless steel tank
- Meets UL flammability specifications

WARRANTY:

We Come To You® In-Home Limited Warranty:

Tank 3-years

Filtration System 1-year (excluding replaceable filter cartridge)

Covers parts and labor.

The complete InSinkErator warranty is included in the Care & Use booklet with each unit.

CERTIFICATIONS:

NSF/ANSI 58 certified for RO compatibility
NSF/ANSI 42 • NSF/ANSI 372 • cULus Listed
ISO 9001 Quality System Certified

Wattage	750 Watts
Voltage	115 Volts
Current	6.5 Amps
Recommended Supply Pressure	15-80 psi
Approx Net Weight	7 lbs (3.2 kg) (HWT200) 9 lbs (4.1 kg) (HWT200-F1000S)

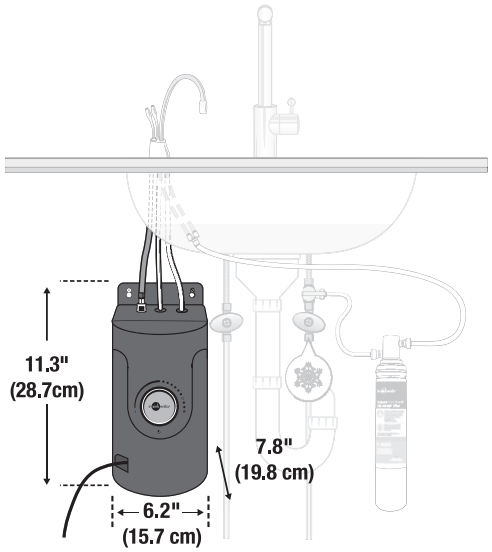

USA: 1.800.558.5700 www.insinkerator.com
CA: 1.800.561.1700 www.insinkerator.ca

EMERSON

WDT569-20A-45-10

InSinkErator may make improvements and/or changes in the specifications at any time, in its sole discretion, without notice or obligation and further reserves the right to change or discontinue models.

©2020 InSinkErator, InSinkErator® is a business unit of Emerson Electric Co. All rights reserved.