Instant Hot Water Dispensers

Model HWT-F1000S

Stainless Steel Tank dispenses filtered near-boiling 200˚F water instantly

Water dispenser sold separately

The Next Necessity™



Submittal Sheet

- 2/3-gallon stainless steel tank
- Easy to adjust temperature control
- Tool-free tank connections and dry start protection to ease installation
- Provides 60 cups/hour of near-boiling water
- F-1000S Filtration System included for fresher tasting water
  - Reduces particulates, chlorine taste and odor for clean, refreshing taste
  - Sanitary, quick-change filter cartridge makes replacement easy
- 115 volts, 750 watts, 6.5 amps
- For use with InSinkErator instant hot water dispensers (excluding model Hot1 and Hot100)
- Unit not for commercial/industrial use

Specifications

Capacity	2/3-gallon stainless steel tank dispenses 60 cups of 200˚F water per hour
Electrical	115 volts, A.C., 750 watts, 6.5 amp heating element with grounded three (3) prong plug
Thermostat	Snap-action, adjustable from 160˚F to 210˚F (factory pre-set at 200˚F)
Insulation	Meets U.L. 94HF-1 flammability specification
Recommended Supply Pressure	30-80 psi
Shipping Weight	Approximately 7.7 lbs.

Dimensions

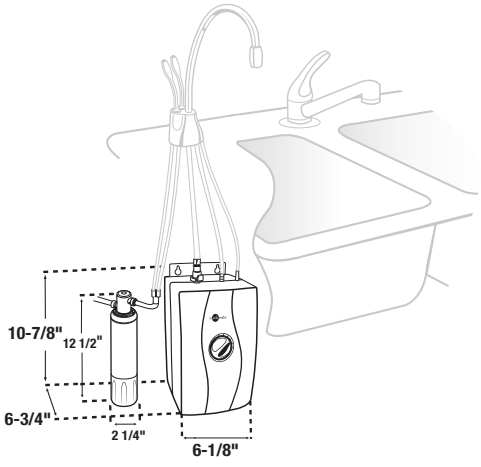

Sample Specification

Instant hot water dispenser(s) shall be equipped with an InSinkErator Model HWT-F1000S stainless steel tank with filtration, adjustable temperature from 160ºF to 210ºF and instant, self-closing hot valve.

In-Home Parts and Service Warranty*
Tank: 3-years
Filtration System: 1-year
(excluding replaceable filter cartridge)

* The complete InSinkErator warranty is included in the Care & Use booklet packed with each unit.

US Pat. D532,497 S (tank enclosure)

Complies with California Lead Plumbing Law

Certified to NSF/ANSI 372 ≤ 0.25% lead

Job Specifications

USA
1-800-558-5700
www.insinkerator.com

Canada
1-800-558-5700
www.insinkerator.ca

InSinkErator may make improvements and/or changes in the specifications at any time, in its sole discretion, without notice or obligation and further reserves the right to change or discontinue models.

®/TM © 2023 InSinkErator. All rights reserved.