SHOWROOM COLLECTION

MODERN 3010

Instant Hot and Cold Water Faucet

FHC3010



FEATURES:

- Hot and cold water faucet – dispenses near-boiling water and cold drinking water
- For use with an InSinkErator instant hot water tank and filtration system (sold separately)
- Self-closing hot valve for automatic shut off
- Handles move forward to avoid hitting backsplash
- Spout swivels 360° for convenience

MATERIAL:

- Reverse osmosis certified and compatible per NSF/ANSI 58
- Lead-free certified and tested per NSF 61, Section 9
- Solid brass construction
- Corrosion resistant ceramic disc valve

FINISHES:

Chrome • Stainless Steel • Arctic Steel • Matte Black
Brushed Bronze • Polished Nickel

WARRANTY:

We Come To You® 5-Year In-Home Limited Warranty. Covers parts and labor.

The complete InSinkErator warranty is included in the Care & Use booklet with each unit.

CERTIFICATIONS:

NSF/ANSI 372 • NSF/ANSI 58 • NSF/ANSI 42/53
NSF/ANSI 61 • ASME A112.18.1 • UPC Certified
ASSE 1023 • ADA Compliant

NSF/ANSI/CAN 61 Q ≤ 1

Supply Connection	1/4" (0.64 cm) Compression and/or push fitting
Required Sink Hole Diameter	1-3/8" (35 mm) Standard Sink Hole
Required Supply Pressure	25–80 psi (172–550 kPA or 1.7–5.5 bar)
Backsplash Clearance for Installation	Minimum 2" (5.08 cm) required from sink hole center to backsplash
Counter Thickness	Maximum of 3" (7.62 cm)
Shipping Weight	4.3 lb (1.95 kg)

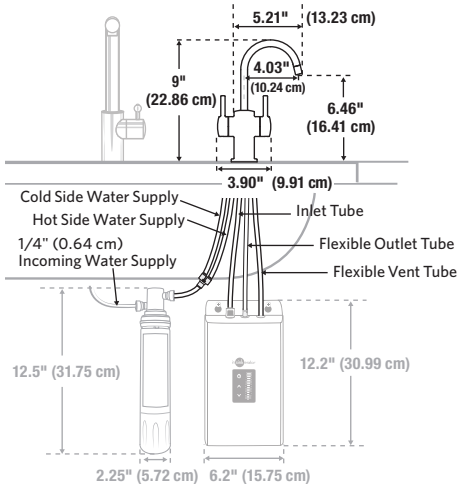

USA: 1.800.558.5700 www.insinkerator.com
CA: 1.800.561.1700 www.insinkerator.ca

InSinkErator may make improvements and/or changes in the specifications at any time, in its sole discretion, without notice or obligation and further reserves the right to change or discontinue models.

®/TM © 2023 InSinkErator. All rights reserved.