Instant Hot Water Dispensers

indulge™ ANTIQUE

F-HC2200

Our finest line of instant hot water dispensers for use with our Hot Water Tank for filtered near-boiling 200°F water and cool drinking water

Tank with filter sold separately (HWT-F1000S)

The Next Necessity™



Submittal Sheet

- **Hot & Cool** – Dispenses near-boiling 200°F water and cool drinking water
- Graceful classic-design spout swivels for greater convenience and stylish integrated levers provide a dramatic look
- Hot lever automatically shuts off, while Stay-On™ cool lever remains on for easy use
- Durable all brass faucet construction
- *We Come To You*® 5-Year In-Home Limited Warranty*
- For use with InSinkErator Hot Water Tank and Filtration System
- **Available in these designer finishes:** Satin nickel, polished nickel, chrome, mocha bronze, oil rubbed bronze, classic oil-rubbed bronze and brushed bronze
- Unit not for commercial/industrial use

Specifications

Hot Valve	Instant, self-closing
Cold Valve	Manual return
Shipping Weight	Approximately 5.0 lbs.
Required Hole Diameter	1-3/8" standard sink hole

Water Filtration System Available

Dimensions

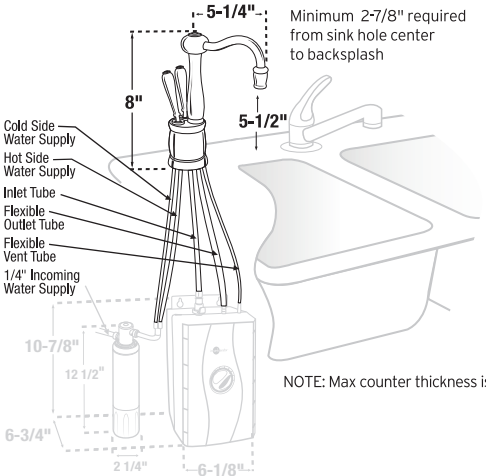

NOTE: Max counter thickness is 3".

Sample Specification

Instant hot water dispenser(s) shall be InSinkErator Model F-HC2200 with 2/3-gallon hot water tank, adjustable temperature from 160°F to 210°F and instant, self-closing hot valve.

Warranty:
5-year parts and in-home service.

* The complete InSinkErator warranty is included in the Care & Use booklet packed with each unit.

Job Specifications

Complies with California Lead Plumbing Law

USA
1-800-558-5700
www.insinkerator.com

Canada
1-800-558-5700
www.insinkerator.ca

InSinkErator may make improvements and/or changes in the specifications at any time, in its sole discretion, without notice or obligation and further reserves the right to change or discontinue models.

®/TM © 2023 InSinkErator. All rights reserved.