insinkerator®



ADVANCED SERIES

Evolution® 1300 LED

Dimensions

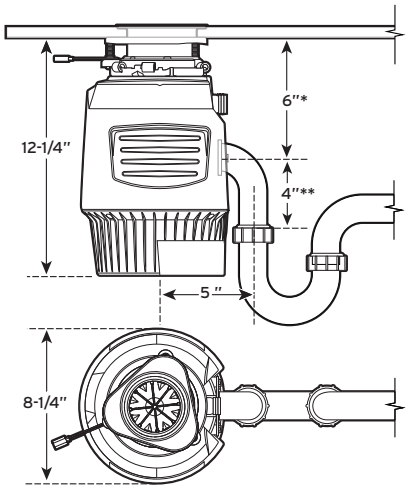

InSinkErator® LEDefense

Directions for LEDefense Use:
Must be continuously powered on for antimicrobial action. If powered off, antimicrobial action stops.

Keep Out of Reach of Children | EPA Est No. 104138-WI-1

Sold by InSinkErator, LLC.
1250 International Dr, Mount Pleasant, WI USA, 53177

Submittal Sheet

This model offers the following features and benefits:

- **3/4 HP heavy duty Dura-Drive® induction motor**
- **LEDefense odor fighting sink flange** kills 99%[1] of odor-causing bacteria
- Always on LED light provides **24/7 protection**
- **Quiet SoundSeal Technology®** is 75% quieter than the Badger® 500 disposal
- **Advanced Grind** for tough and fibrous food scraps like bones and corn cobs
- **3-Stage MultiGrind® Technology:** Finest grind designed to help prevent clogs[2]
- **EZ Connect Disposal** easily connects to a hardwire connection or outlet
- **Removable, dishwasher safe LEDefense sink baffle** traps noise inside the disposal
- Safe for use with properly maintained septic tanks
- **EZ Connect Cord** and Hardwire Adapter included

Sample Specification

Food Waste Disposer(s) shall be InSinkErator Evolution® 1300 LED, continuous feed, with 3/4 HP motor, stainless steel grinding elements with two stainless steel 360° swivel lugs. Self-service wrench.

Warranty

9-Year *We Come to You*® In-Home Limited Warranty[3]

The ONLY manufacturer with disposers INVENTED, DESIGNED & ASSEMBLED in the USA

UL LISTED · IAPMO Listed · ASSE 1008 · ASSE Sanitary Engineering

Specifications

Type of Feed	Continuous
On/Off Control	Wall Switch
Motor	Single Phase
HP	3/4
Volts	120
HZ	60
Amp. (Avg. Load)	9.5
Time Rating	Intermittent
Lubrication	Permanently Lubricated Upper & Lower Bearings
Shipping Weight (Approx.)	19.1 lbs.
Overall Height	12.25"
Motor Protection	Automatic Reset
Drain Connection	1-1/2" Cushioned Slip Joint
Dishwasher Drain Connection	Yes
Power	LEDefense is powered by a USB-C power adapter with a 6ft cord. LEDs are powered 24/7. The power draw is <4.7W. Requires a continuously powered outlet.
LED Light	LEDefense is UV-free

[1] Grind Chamber/Flange Below Baffle: Results may vary depending on the amount of light that is reaching the surfaces in the space where the product is installed and the length of time of exposure. Use of Vyv antimicrobial light is not intended to replace manual cleaning and disinfection practices. Sanitization will only function when unit is plugged in and LED lights are on. Testing on a non-enveloped virus (MS2 bacteriophage) showed a 99.985% reduction in controlled laboratory testing in 6 hours on hard surfaces. Testing on SARS-CoV-2 (enveloped virus) showed a 98.45% reduction in controlled laboratory testing in 4 hours on hard surfaces. Testing on Staphylococcus aureus, Salmonella enterica and Escherichia coli showed 99%+ reduction in controlled laboratory testing in 24 hours on hard surfaces. Growth of mold (Aspergillus) inhibited (in laboratory-controlled studies with prolonged use).

[2] Compared to InSinkErator® 1-stage grind and 2-stage MultiGrind® Technology.

[3] Visit www.insinkerator.com for warranty details.

1-800-558-5700
www.insinkerator.com

®/TM © 2025 InSinkErator. All rights reserved.