PROJECT: _____ **ITEM NO.:** _____

DEJAMMING WRENCH

- Dejamming wrench loosens any lodged object
- Easy to handle
- To order, specify Part #13993

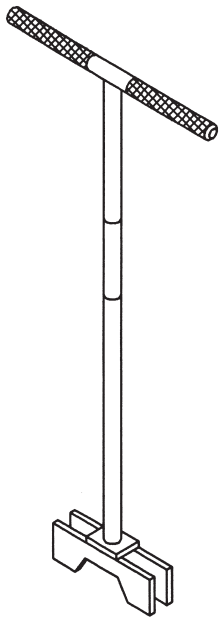

Dejamming Wrench

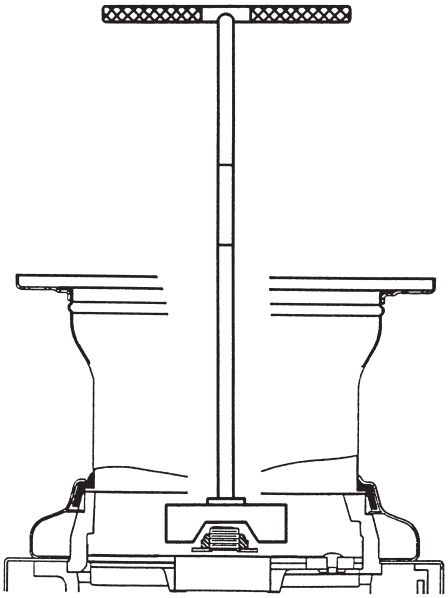

Dejamming Wrench engaged in unit

Place the wrench over the shredder nut and stationary lugs located on the rotating shredder. Using the handle, rotate the wrench clockwise then counterclockwise to loosen the jam.*

NOTE: After freeing the rotating shredder, remove all loose particles which may have caused the jam.

*Cannot be used with 3½" opening

Our products appear on **The KCL CADalog**
More information is available from
Kochman Consultants, Ltd. at www.kclcad.com.

1250 International Drive
Mount Pleasant, WI 53177
TEL: 800-845-8345
www.insinkerator.com/foodservice

InSinkErator ©2023 Printed in USA