insinkerator®

KITCHEN BETTER™

# Mounting Adapter Selection Guide



# Adaptability is one of our best features.

Our disposers include two types of stainless steel collar adaptors and a sink flange adaptor to accommodate any size sink opening. Customize your disposer and clean up operation by choosing from a variety of bowl sink assemblies designed for dish tables or drainboards.

## Follow these steps and use the chart to select the correct InSinkErator Mounting Adaptor

**STEP 1:** Disconnect existing disposer from sink bowl or cone.

**STEP 2:** Find the diagram that matches the shape of your sink bowl or cone.

**STEP 3:** Measure the A and B dimensions (also C, D and E if indicated).

**STEP 4:** Match the manufacturer and dimensions to find the adaptor number to order.

**1**

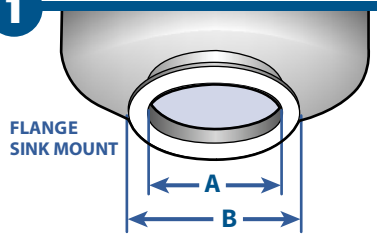


A – Diameter (sink or bowl opening)
B – Diameter (outside flange)

| Normally Used By | A | B | ISE Ring Adaptor # | Special Information |
|---|---|---|---|---|
| ISE, Waste King, Toledo, National | 4 ½" | 5 ⅛" | 11327A | Discard previous adaptor parts. |
| Bus Boy | 6" | 6 ⅞" | 11327K | Discard previous adaptor parts (has 3-piece split ring). |
| ISE, Toledo | 6" | 7 3⁄16" | 11327B | Discard previous adaptor parts. |
| Standard ISE mounting | 6 ⅝" | 7 ⅛" | 11599E | Discard previous adaptor parts. |
| National, Hobart, Toledo | 7" | 7 ⅜" | 11327G | Discard previous adaptor parts. National mounting has ten bolt circle on split ring. |
| Salvajor | 7" | 7 ¾" | 11599A | Discard previous adaptor parts (split ring supplied). |
| ISE, Toledo | 8" | 9 ¼" | 11327 | Discard previous adaptor parts (split ring supplied). |

**2**

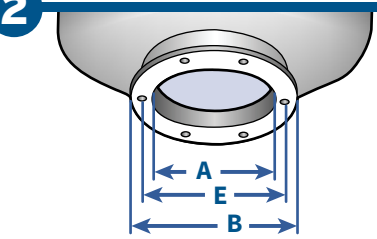


A – Diameter (sink or bowl opening)
B – Diameter (outside flange)
E – Diameter (bolt hole circle)

| Normally Used By | A | B | E | No. of Bolt Holes | ISE Ring Adaptor # | Special Information |
|---|---|---|---|---|---|---|
| Waste King, Red Goat | 4 ½" | 6 ½" | 5 ½" | 6 | 11599 | Discard previous adaptor parts. Use existing bolt holes. |
| American Delphi, Atomic | 6" | 7 ½" | 6 ⅞" | 6 | 11378D | Discard previous adaptor parts. Use existing bolt holes. |
| National, Hobart | 7" | 8 ½" | 8 1⁄16" | 10 | 11599B | Discard previous adaptor parts. |

**3**

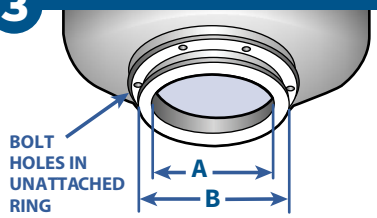


A – Diameter (sink or bowl opening)
B – Diameter (outside flange)

| Normally Used By | A | B | ISE Ring Adaptor # | Special Information |
|---|---|---|---|---|
| Waste King | 6" | 6 ½" | 11327D | Loose ring on sink not used with this adaptor (O.D. of loose ring is 7 ½" with six bolts – 7" bolt hole circle diameter). |

## 4

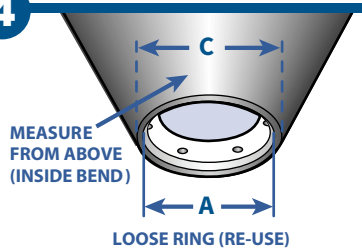


A – Diameter (sink or bowl opening)
C – Diameter (inside bend)

| Normally Used By | A | C | ISE Ring Adaptor # | Special Information |
|---|---|---|---|---|
| Waste King, Bus Boy | 5 7/8" | 6 1/2" | 11327H | Re-use existing clamping ring. |
| Waste King, Bus Boy | 5 7/8" | 6 7/8" | 11327H | |

## 5

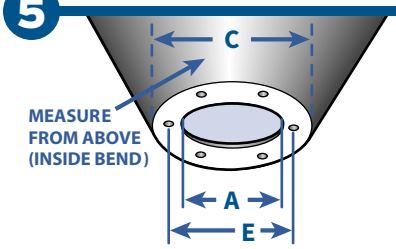


A – Diameter (sink or bowl opening)
C – Diameter (inside bend)
E – Diameter (bolt hole circle)

| Normally Used By | A | C | E | No. of Bolt Holes | ISE Ring Adaptor # | Special Information |
|---|---|---|---|---|---|---|
| Hobart | 4 1/2" | 6 7/8" | 5 1/2" | 6 | 11327H | Discard previous adaptor parts. |

## 6 Discontinued

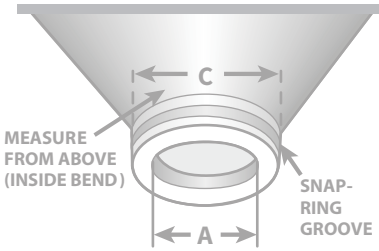


A – Diameter (sink or bowl opening)
C – Diameter (inside bend)

| Normally Used By | A | C |
|---|---|---|
| Hobart | 5" | 5 7/8" |
| GE | 6" | 6 3/8" |

## 7

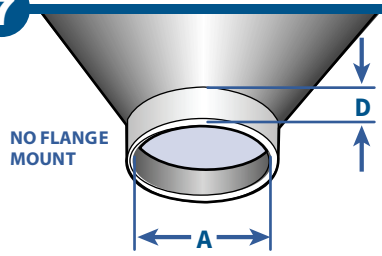


A – Diameter (sink or bowl opening)
D – Diameter

| Normally Used By | A | D | ISE Ring Adaptor # | Special Information |
|---|---|---|---|---|
| Red Goat, Insinger | 4 1/2" | 1 1/8" | 11378C | 4 3/4" rubber connection sleeve and clamping bands. Support legs required. |
| Waste King | 6" | 1 1/8" | 11378A | 6 1/4" rubber connection sleeve and clamping bands. Support legs required. |
| Red Goat, Insinger | 7" | 1 1/8" | 11378B | 7 1/4" rubber connection sleeve and clamping bands. Support legs required. |
| Master | 8" | 1" | 11599K | 8 1/4" rubber connection sleeve and clamping bands. Support legs required. |

## 8

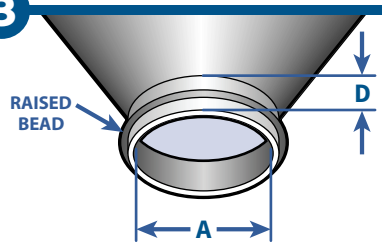


A – Diameter (sink or bowl opening)
D – Diameter

| Normally Used By | A | D | ISE Ring Adaptor # | Special Information |
|---|---|---|---|---|
| Salvajor | 4 7/16" | 1" | 11599N | Has raised bead on outside of sink throat. Support legs required. |
| Salvajor | 6 5/8" | 1" | 11599H | |

# Trusted by foodservice consultants and equipment dealers.

Whether you serve 25 or 2,500 people, there is an InSinkErator disposer that's right for you.

## InSinkErator Commercial Disposer Sizing Chart

To determine the proper size disposer, use this recommended sizing chart. Sizing recommendations are given in general terms; actual capacities vary depending on the volume and type of food waste. LC-50 model available for light duty commercial applications, such as coffee shops, convenience stores, or quick service restaurants.

**For questions or special applications, contact your Foodservice Consultant or InSinkErator.**




## Five Stainless Steel Models from 1 HP to 10 HP in three sizes:

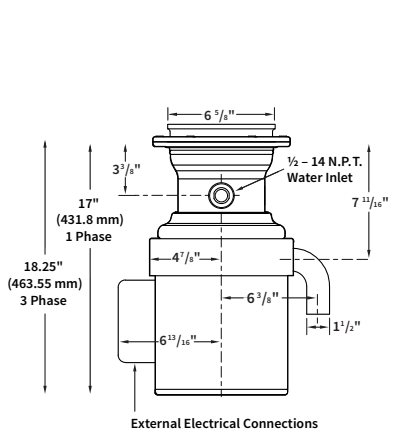


**Small Capacity**
*1 HP*

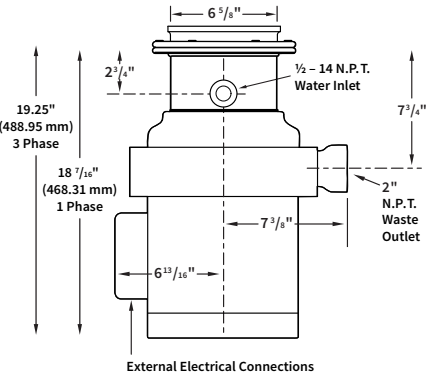


**Medium Capacity**
*2 HP*

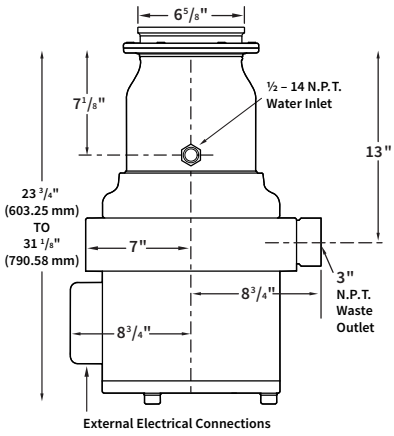


**Large Capacity**
*3, 5, & 10 HP*

KITCHEN BETTER™

From food waste disposers and reduction systems to hot water dispensers and water saving systems, InSinkErator has a commercial equipment solution to enhance your day-to-day foodservice operations.


insinkerator®

1250 International Drive, Mount Pleasant, WI 53177
T: 800-845-8345
www.insinkerator.com/foodservice
F188-23D-95-85



InSinkErator® may make improvements and/or changes in the specification at any time, in its sole discretion, without notice or obligation and further reserves the right to change or discontinue models.

©2023 InSinkErator All rights reserved.