# DISPOSER CONTROL CENTER
## Installation Manual

# Model CC-202D




**⚠ WARNING** WARNING indicates a hazardous situation which, if not avoided, could result in death or serious injury.

**⚠ CAUTION** CAUTION indicates a hazardous situation which, if not avoided, could result in minor or moderate injury.

***NOTICE*** NOTICE is used to address practices not related to physical injury.

Please be certain that the person who installs or uses this appliance carefully reads and understands the Safety Instructions contained in this manual.

## *Table of Contents*

**Introduction/Features/Mounting Control Center**
Introduction ..... 4
Features ..... 4
Mounting the Control Center ..... 4

**Plumbing Connections** ..... 5

**Electrical Connections**
Electrical Connections ..... 6
Time Delay Relay ..... 6

**Operating Instructions/Troubleshooting**
Operating Instructions ..... 7
Troubleshooting ..... 7

**Wiring Diagrams**
Model No. CC-202D-5 (120V, 1 phase, 1/2 - 2 HP) ..... 8
Model No. CC-202D-6 (208/240V, 1 phase, 1/2 - 2 HP) ..... 9
Model No. CC-202D-7 (208/240V, 3 phase, 1/2 - 10 HP) ..... 10
Model No. CC-202D-8 (380/460V, 3 phase, 1/2 - 10 HP) ..... 11

## *Warranty*

### FOODSERVICE DISPOSER CONTROL CENTER LIMITED WARRANTY

InSinkErator Foodservice Disposer Control Centers are warranted against defects in material and workmanship for one year from the date of installation. The warranty includes parts and labor, provided the service is performed by an InSinkErator Factory Authorized Service Center. This warranty does not apply if failure is due to: *faulty or improper electrical installation, faulty or improper plumbing installation, product abuse or misuse, or accidental damage.*

Foodservice disposer accessories are included in this warranty only if they are included in the original disposer purchase package.

## *INTRODUCTION*

The CC-202D Control Center is CUL® US listed for use with InSinkErator Foodservice Disposers. See Table 1 for electrical specifications. The control center operates the disposer. Its main functions are:

- To start and stop the disposer.
- To reverse the direction of the disposer motor automatically upon restart.
- To start the water flow to the disposer.

*Table 1. Electrical Specifications*

| Model | Part No. | Voltage | Phase | HP |
|---|---|---|---|---|
| CC-202D-5 | 15257 | 120V | 1 | 1/2-2 |
| CC-202D-6 | 15257A | 208/240V | 1 | 1/2-2 |
| CC-202D-7 | 15257B | 208/240V | 3 | 1/2-10 |
| CC-202D-8 | 15257C | 380/460V | 3 | 1/2-10 |

## *FEATURES*

### AUTOMATIC REVERSE

The disposer motor will reverse its direction of rotation automatically upon restart. To avoid motor damage, a five second delay feature prevents reversing while motor is coasting.

### ENCLOSURE

Stainless steel NEMA 4 construction.

### PUSH BUTTON OPERATION

Push Black button to start disposer.
Push Red button to stop disposer.

## NOTICE

***PROPERTY DAMAGE***

The Control Center should only be used with an InSinkErator Foodservice Disposer. The Control Center voltage and phase should match the disposer. The disposer current and horsepower should be equal to or less than the Control Center rating.

## *MOUNTING THE CONTROL CENTER*

Use the flanges at the back of the control center enclosure and only mount panel in the upright vertical position (door hinge is on the left). See Figure 1.

Locate control center within sight of disposer per local codes.

If box is mounted to the sink table, recess the box so that the buttons do not extend beyond the table's edge.

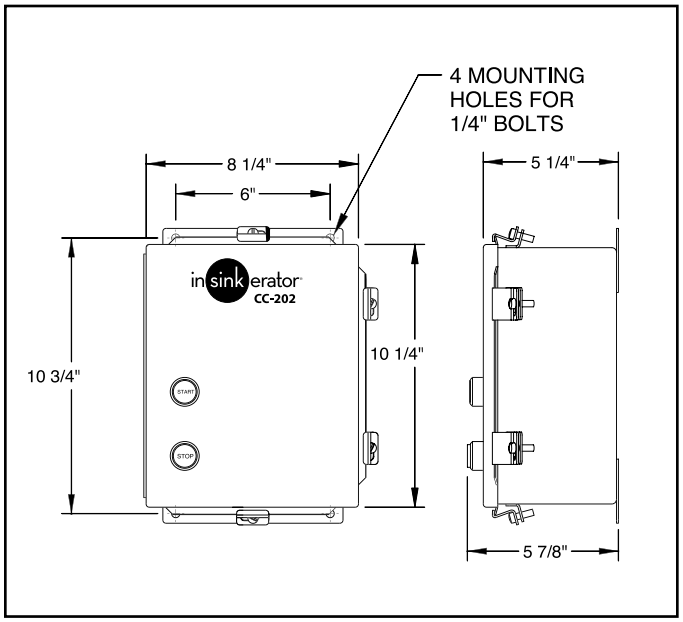


*Figure 1. Control Center Dimensions*

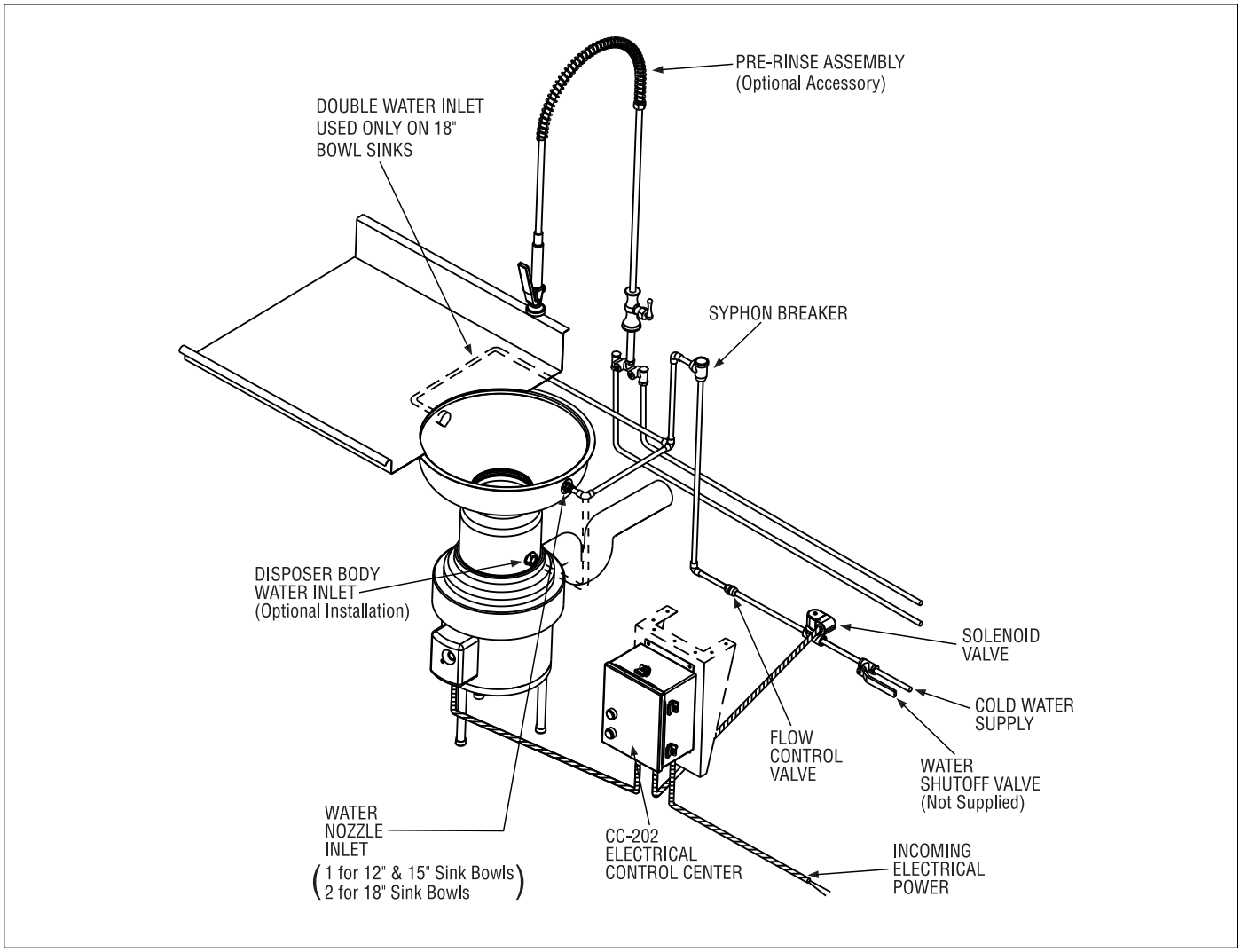


*Figure 2. Typical Installation Diagram*

## *PLUMBING CONNECTIONS*

The flow control valve, syphon breaker and solenoid valve are supplied with all complete disposer packages (packed separately).

Make certain that the solenoid valve supplied is the proper voltage. Make certain that the valves are plumbed according to water flow direction arrows marked on valves or the valves will not function properly.

The flow control valve regulates all water flowing into the disposer. This conserves water and prevents overloading. Check direction of water flow arrows.

Syphon breaker must be installed above the sink flood plane **per local plumbing codes**. Check direction of water flow arrows.

**⚠ WARNING**

***ELECTRIC SHOCK***

- Turn off the electrical supply to the disposer before attempting any work on it. Use a voltmeter or circuit tester to ensure that power is off.
- All Installation work must conform to local plumbing and electrical codes.
- All control centers and disposers must be carefully and permanently grounded.
- A properly fused disconnect must be installed at the electrical supply source for the control center.

**NOTICE**

***PROPERTY DAMAGE***

- Ensure that control center voltage and phase match the disposer motor and electrical supply. Check name plates on disposer and control centers for voltage and phase specifications.
- Refer to the control center wiring diagrams in this manual for correct connection.
- Use NEMA 4 watertight electrical connectors (not supplied) when making electrical connections to the control center.

## *ELECTRICAL CONNECTIONS*

Connect the incoming line power and disposer motor to the labeled terminal block in the control center. Use appropriate voltage and phase electrical connection diagrams at the back of this manual. Wire the disposer motor for the correct voltage using the connection diagram inside the motor terminal box.

Make sure the solenoid valve is the same voltage as the control panel and supply power.

Connect water solenoid valve as shown in the wiring diagrams on pages 8, 9, 10 and 11.

Wire per local electrical code using 7/8" diameter holes in bottom of control center cabinet and install NEMA 4 watertight electrical connectors (not supplied).

After completing the connections, close door and fasten all locking clamps. Replace disposer motor cover.

Please read the disposer operating instructions and train your personnel before operating the disposer. The operating instructions include:

- Disposer operation
- How to restart the disposer after a jam condition

**⚠ WARNING**

***PERSONAL INJURY***

- Allow only trained personnel to operate disposer.
- Use baffles and guarding to avoid splashing and ejection of materials.
- Do not put fingers or hands into the disposer.
- When attempting to remove objects from a disposer, use long-handled tongs or pliers.
- Turn power off before clearing a jam, removing an object from the disposer or pressing the red reset button.

## *OPERATING INSTRUCTIONS*

TO START

1. Check to ensure disposer is free of foreign objects.
2. Ensure power is on.
3. Push start button. Disposer motor will run and water will flow into the disposer.

TO STOP

1. Push stop button. Disposer motor and water will stop

## *TROUBLESHOOTING*

This control center was inspected and tested under operating conditions before shipment from the factory. In case of trouble, check the items listed below

**A. Disposer motor will not start and water does not flow.**

1. No incoming line power, turn line power on.

**B. Disposer motor stops while grinding but water continues to flow.**

1. Disposer is jammed. Press stop button and follow directions for unjamming.
2. Disposer motor overload protector has tripped. Follow instruction in C1.

**⚠ WARNING**

**ELECTRICAL SHOCK/PROPERTY DAMAGE**

- Troubleshooting other than what is recommended in this section should only be performed by qualified service personnel.
- Further troubleshooting performed by untrained personnel could result in electric shock or damage to the control center.
- All electrical checks must be performed by a qualified professional.

**C. Disposer will not start but water flows.**

1. Overload protector on the disposer may have tripped. Press stop button. Locate red reset button on front of disposer electrical cover. Press to reset. If motor had been running, wait five minutes for the motor and overload to cool down before starting.
2. Disposer is jammed. Press stop button and follow directions for unjamming that were supplied with the disposer.

**D. Water flows constantly before start button is pushed.**

1. Water solenoid valve is installed backward. Water flow should be in the direction of the arrow on valve.
2. Water solenoid valve is wired incorrectly. Recheck wiring diagram

**E. Overload trips frequently.**

1. Do not overload disposer with excess amounts of food waste and water (see disposer instruction for recommended water flows).

***If trouble still persists, call your nearest InSinkErator Authorized Service Agency. For the location of your nearest service agency, call toll-free 1-800-845-8345.***

# *CC-202D-5 Wiring Diagram*

*P/N 15257*

## ⚠ WARNING

***ELECTRICAL SHOCK***

- Turn off the electrical supply to the disposer before attempting any work on it. Use a voltmeter or circuit tester to ensure that power is off.
- Installation must conform to local electrical codes.
- All control centers and disposers must be carefully and permanently grounded.
- A properly fused disconnect must be installed at the electrical supply source for the control center.

## *NOTICE*

***PROPERTY DAMAGE***

- Ensure that the control center voltage and phase match the disposer motor and electrical supply. Check nameplates on disposers and control centers for voltage and phase specification.
- The disposer motor wiring connection is shown in the disposer terminal box.

**Note:** • Red wires = Low voltage (24 V) control.
• Black wires = Line voltage (208 - 240 V) control.

**CC-202D-5**
**120 V**
**1-phase**
**1/2 to 2 HP**

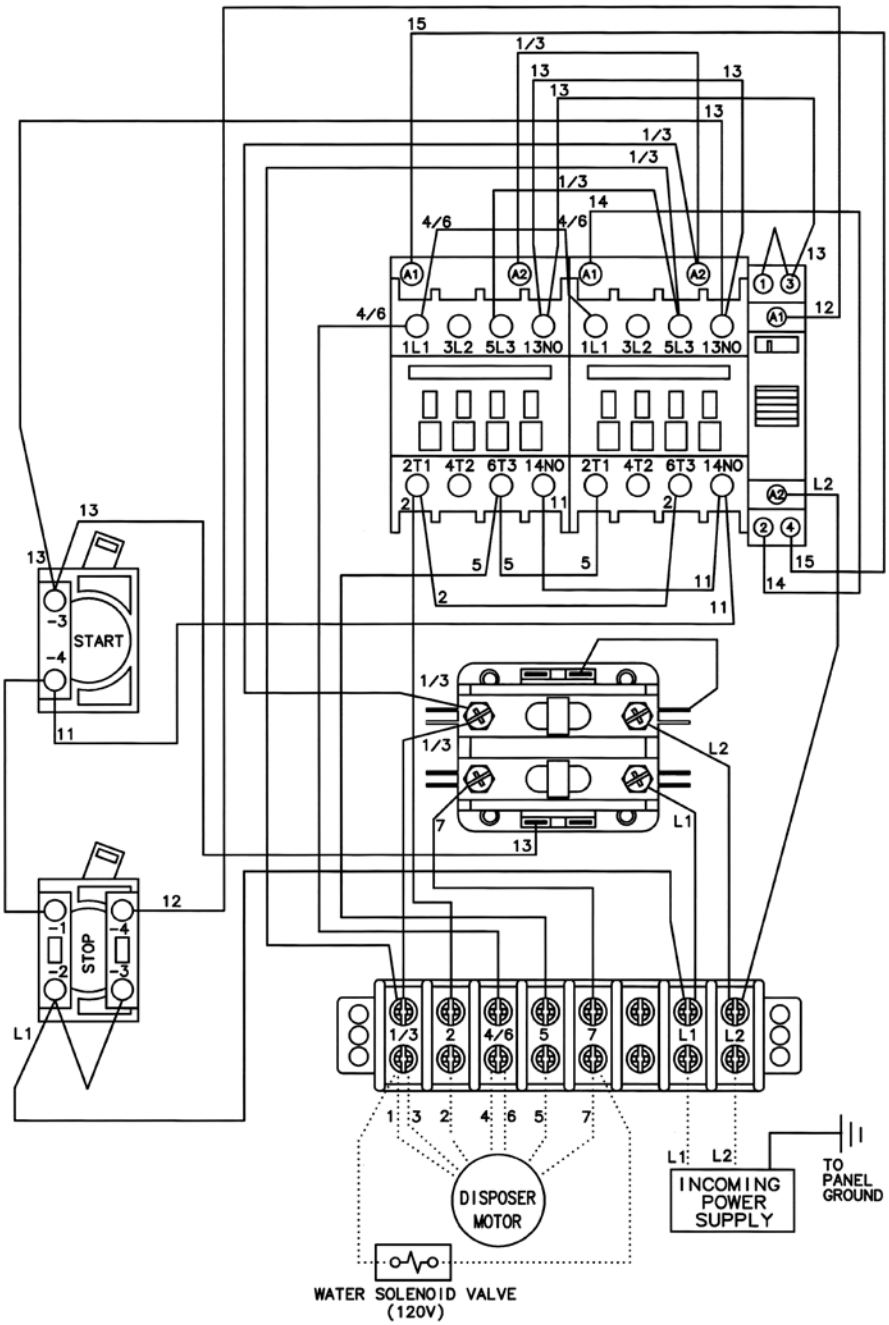


**Call Toll Free 1-800-845-8345 for the nearest InSinkErator Authorized Service Agency or to reach Technical Support.**

# *CC-202D-6 Wiring Diagram*

***P/N 15257A***

## ⚠ WARNING

***ELECTRICAL SHOCK***

- Turn off the electrical supply to the disposer before attempting any work on it. Use a voltmeter or circuit tester to ensure that power is off.
- Installation must conform to local electrical codes.
- All control centers and disposers must be carefully and permanently grounded.
- A properly fused disconnect must be installed at the electrical supply source for the control center.

## *NOTICE*

***PROPERTY DAMAGE***

- Ensure that the control center voltage and phase match the disposer motor and electrical supply. Check nameplates on disposers and control centers for voltage and phase specification.
- The disposer motor wiring connection is shown in the disposer terminal box.

**Note:** • Red wires = Low voltage (24 V) control.
• Black wires = Line voltage (208 - 240 V) control.

**CC-202D-6**
**208/240 V**
**1-phase**
**1/2 to 2 HP**

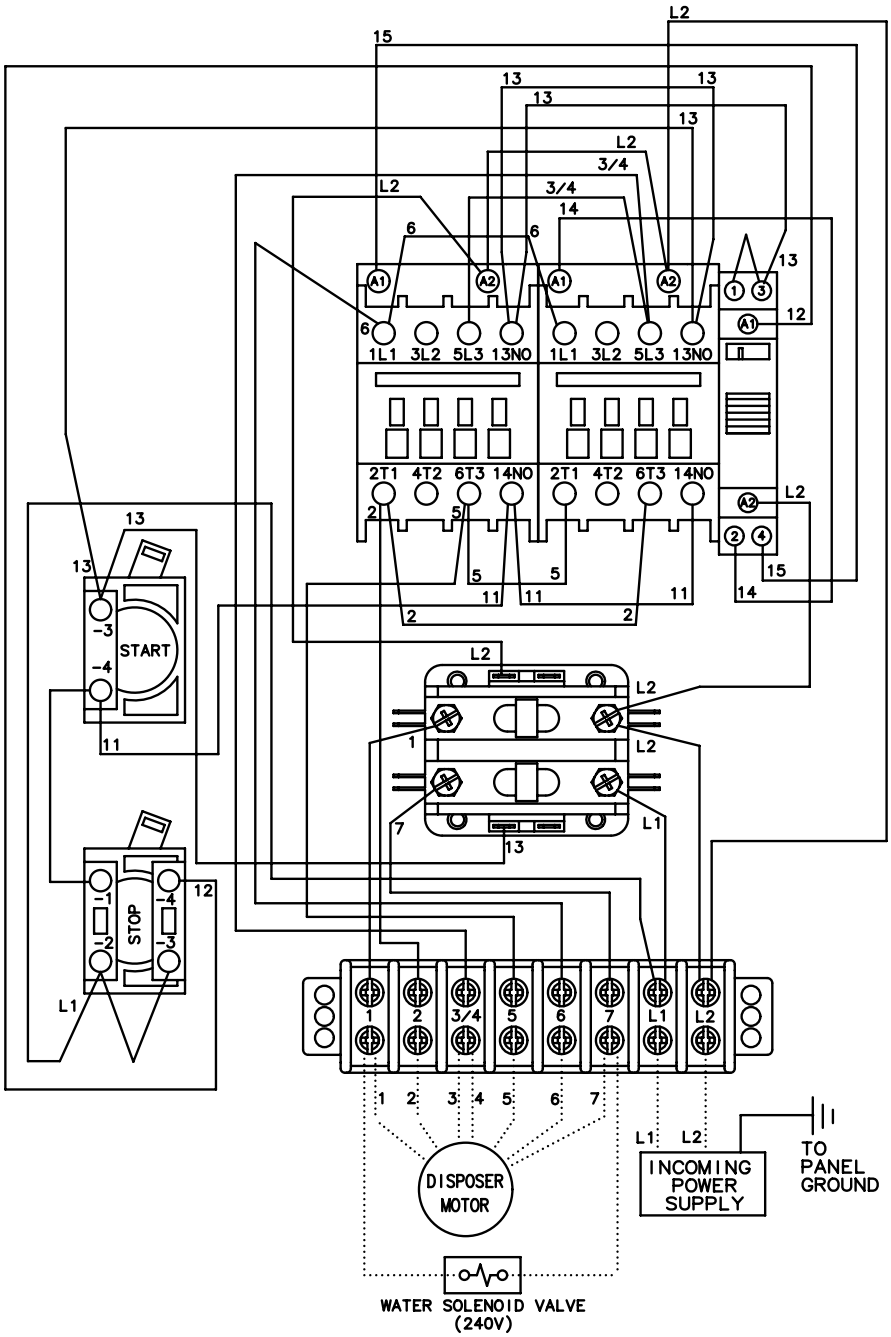


**Call Toll Free 1-800-845-8345 for the nearest InSinkErator Authorized Service Agency or to reach Technical Support.**

# *CC-202D-7 Wiring Diagram*

*P/N 15257B*

## ⚠ WARNING

***ELECTRICAL SHOCK***

- Turn off the electrical supply to the disposer before attempting any work on it. Use a voltmeter or circuit tester to ensure that power is off.
- Installation must conform to local electrical codes.
- All control centers and disposers must be carefully and permanently grounded.
- A properly fused disconnect must be installed at the electrical supply source for the control center.

## *NOTICE*

***PROPERTY DAMAGE***

- Ensure that the control center voltage and phase match the disposer motor and electrical supply. Check nameplates on disposers and control centers for voltage and phase specification.
- The disposer motor wiring connection is shown in the disposer terminal box.

**Note:** • Red wires = Low voltage (24 V) control.
• Black wires = Line voltage (208 - 240 V) control.

**CC-202D-7**
**208/240 V**
**3-phase**
**1/2 to 10 HP**

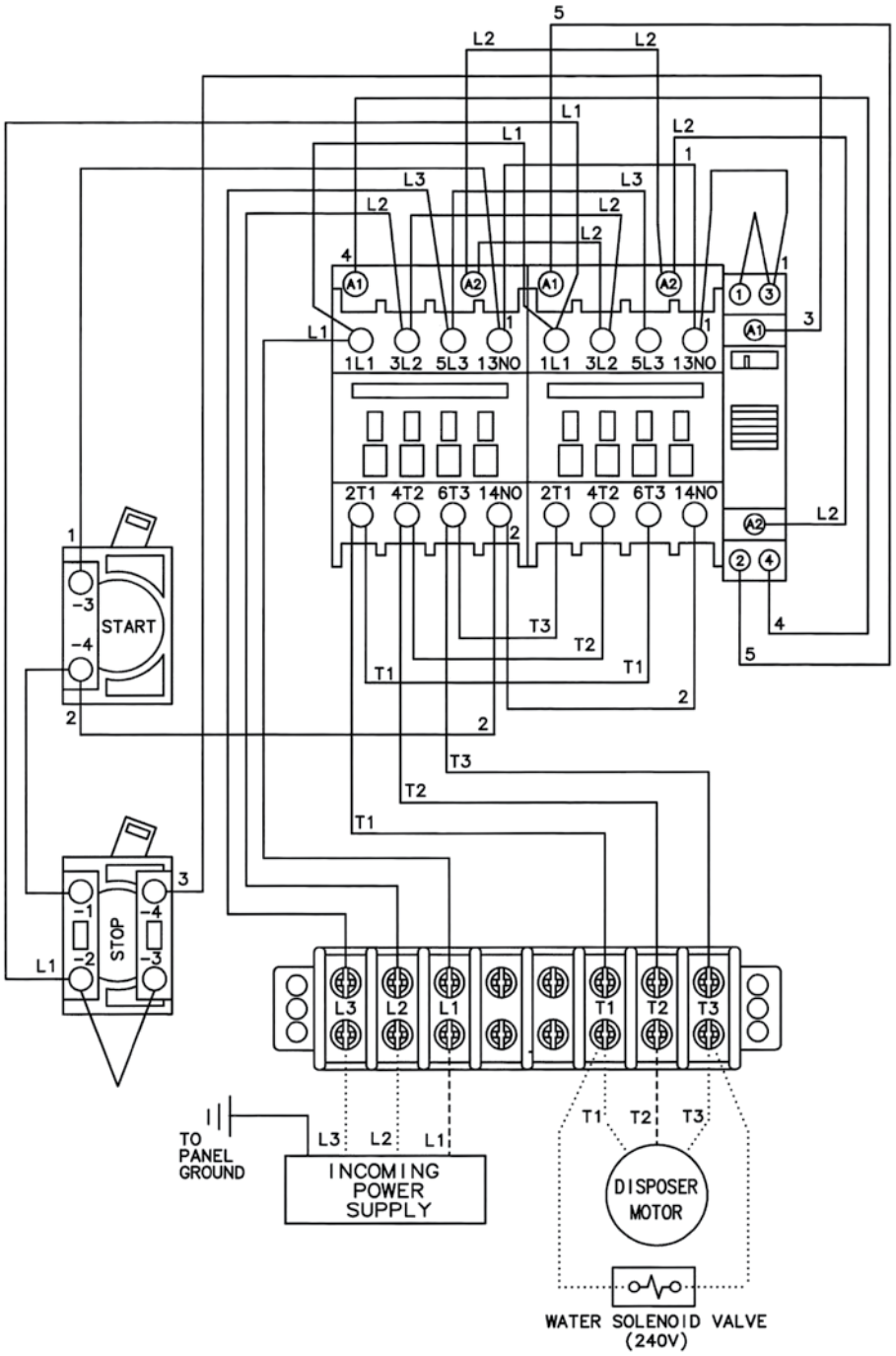


**Call Toll Free 1-800-845-8345 for the nearest InSinkErator Authorized Service Agency or to reach Technical Support.**

# *CC-202D-8 Wiring Diagram*

***P/N 15257C***

## ⚠ WARNING

***ELECTRICAL SHOCK***

- Turn off the electrical supply to the disposer before attempting any work on it. Use a voltmeter or circuit tester to ensure that power is off.
- Installation must conform to local electrical codes.
- All control centers and disposers must be carefully and permanently grounded.
- A properly fused disconnect must be installed at the electrical supply source for the control center.

## *NOTICE*

***PROPERTY DAMAGE***

- Ensure that the control center voltage and phase match the disposer motor and electrical supply. Check nameplates on disposers and control centers for voltage and phase specification.
- The disposer motor wiring connection is shown in the disposer terminal box.

**Note:** • Red wires = Low voltage (24 V) control.
• Black wires = Line voltage (380 - 460 V) control.

**CC-202D-8**
**380/460 V**
**3-phase**
**1/2 to 10 HP**

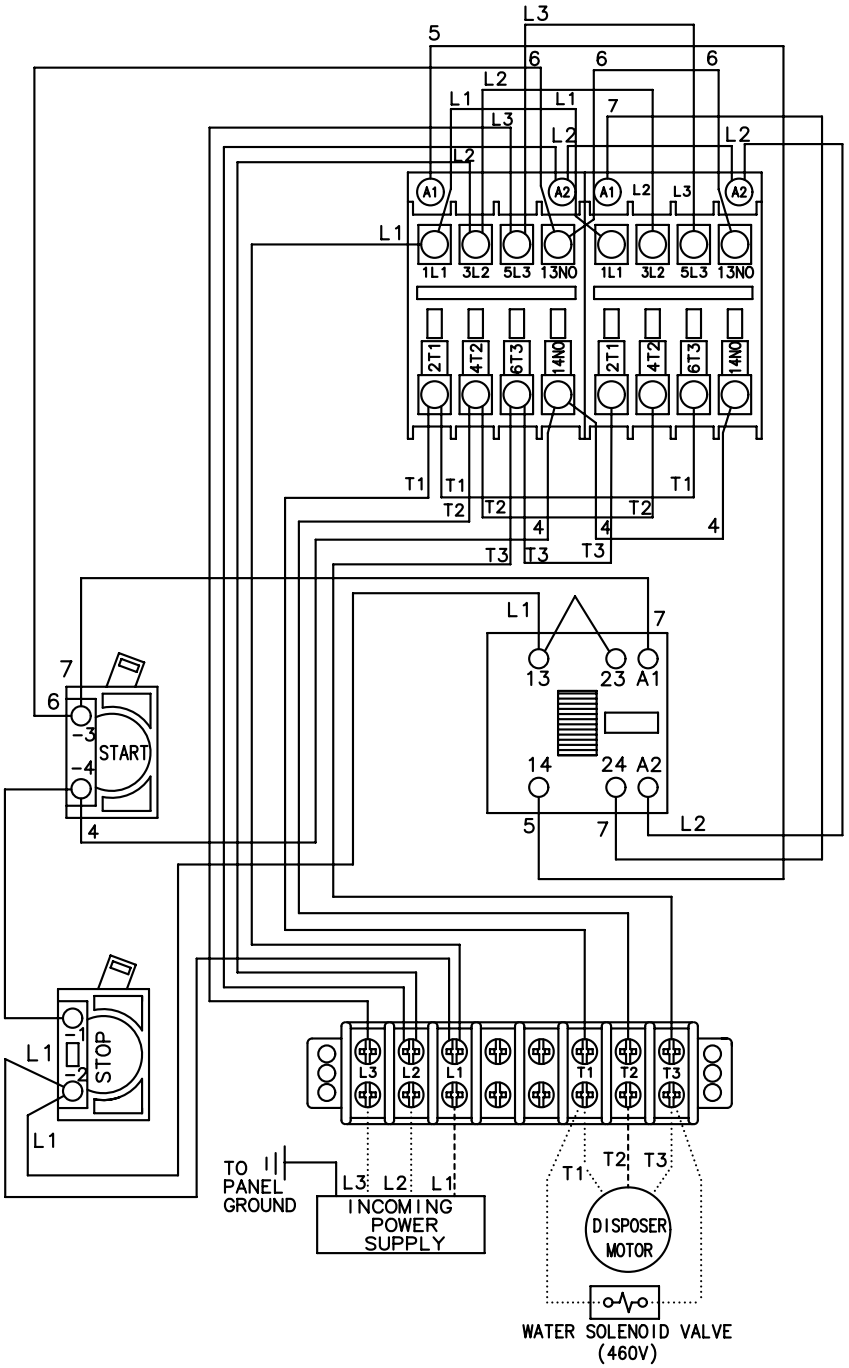


**Call Toll Free 1-800-845-8345 for the nearest InSinkErator Authorized Service Agency or to reach Technical Support.**