PROJECT: _____ **ITEM NO.:** _____

MODELS C1300 / HC1300C
Hot Water Dispensers

APPLICATION: Designed for large volume usage of steaming hot water. Up to 200°F (average) hot water per hour is provided by the system's 2/3-gallon tank. Saves time, work and water – heat only the water you use.

FEATURES

- Foodservice grade heating element
- Swiveling gooseneck spout travels 90° to provide clearance for large vessels
- Easy-action lever with automatic shut-off for hot
- Dual cold lever (HC model) with optional filtration system
- Durable all brass faucet with polished chrome finish
- 2/3-gallon stainless steel tank construction for longer life
- Easy-to-adjust temperature control on front panel
- Mounts in standard sink opening or 1-3/8" drilled hole
- Tool-free tank connections and dry start protection for easy installation
- 1-year full-service limited warranty on parts and labor



SPECIFICATIONS

Capacity	2/3-gallon tank dispenses up to 200°F (average) hot water
Electrical	115 Volts A.C., 1300 Watts, 11.3 amp heating element with 36" cord and grounded plug
Thermostat	Snap action, adjustable from 160°F to 210°F (factory pre-set at approximately 200°F)
Insulation	Meets U.L. 94HF-1 flammability specification
Valve	Instant, self-closing
Recommended Supply Pressure	25-80 psi
Shipping Weight	Approximately 11.5 lbs.

To ensure optimum performance, maximum distance between tank and base of faucet should be 14-1/2" or less.

DIMENSIONS

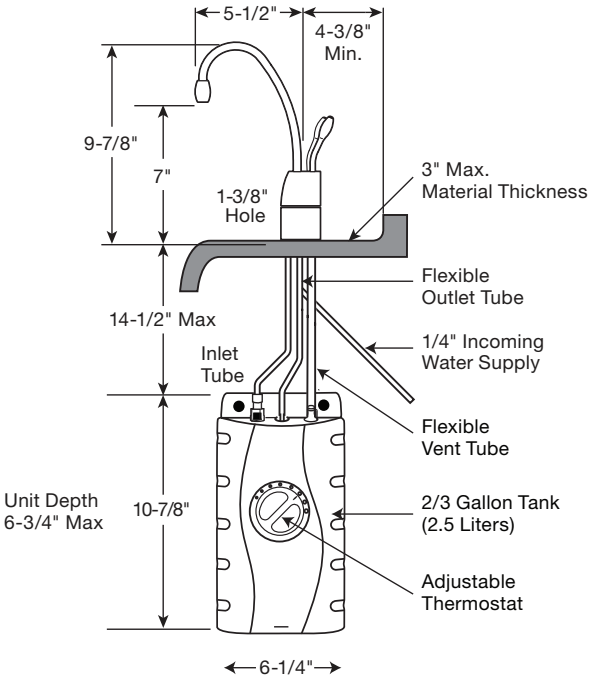

Certified to NSF/ANSI/CAN 372
0.25% lead

NSF/ANSI/CAN 61
FAUCET ONLY

Sanitation
NSF/ANSI 4

LEAD FREE

LISTED

ISO 9001 QUALITY SYSTEMS CERTIFIED

A complete collection of our product drawings is available for download at the **InSinkErator Revit/CAD** Library, which can be found at www.insinkerator.com/foodservice. Product information is also accessible on ***The KCL CADalog***. More information is available from KCL at www.kclcad.com.

Certification Links: www.pld.iapmo.org,www.nsf.org/certified-products-systems

1.800.845.8345
www.insinkerator.com/foodservice

InSinkErator may make improvements and/or changes in the specifications at any time, in its sole discretion, without notice or obligation and further reserves the right to change or discontinue models.

®/TM © 2024 InSinkErator. All rights reserved.