insinkerator®



BADGER® SERIES

Badger 7XL

Dimensions

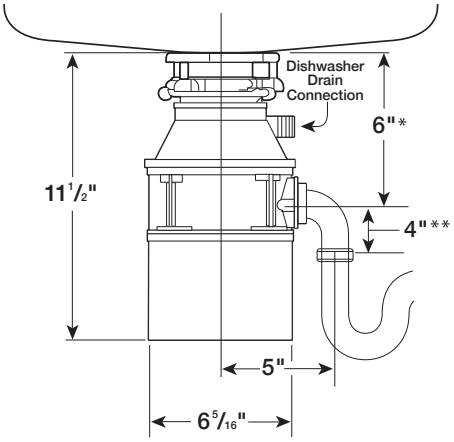

* Distance from bottom of sink to center line of disposer outlet. Add 1/2" when stainless steel sinks are used.

** Length of tailpipe from center line of disposer outlet to end of tailpipe. NOTE: Plumb waste line to prevent standing water in disposer motor housing.

Job Specifications

Submittal Sheet

This model offers the following features and benefits:

- **3/4 HP heavy duty Dura-Drive® induction motor**
- **1-Stage grind** for a dependable grind for most food scraps
- **Lift & Latch® Technology** simplifies installation so the disposal can be attached with two hands
- **Rust Resistant stainless steel grind components**
- **3D Grind Zone** is a specially engineered grind chamber that keeps food in the grind zone and directs water to rinse chamber walls
- **Power cord attached**

Sample Specification

Food Waste Disposer(s) shall be InSinkErator Badger 7XL with power cord attached, continuous feed, with 3/4 HP motor, stainless steel grinding elements with two stainless steel 360° swivel lugs. Self-service wrench.

Warranty

6-Year *We Come to You*® In-Home Limited Warranty[1]

[1] Visit www.insinkerator.com for warranty details.

LISTED · IAPMO Listed · ASSE 1008 · ASSE Sanitary Engineering

1-800-558-5700
www.insinkerator.com

Specifications

Type of Feed	Continuous
On/Off Control	Wall Switch
Motor	Single Phase
HP	3/4
Volts	120
HZ	60
Amp. (Avg. Load)	9.5
Time Rating	Intermittent
Lubrication	Permanently Lubricated Upper & Lower Bearings
Shipping Weight (Approx.)	15 lbs. 6 oz.
Overall Height	12-5/8"
Grind Chamber Capacity	26 oz.
Motor Protection	Manual Reset Overload
Drain Connection	1-1/2" Cushioned Slip Joint
Dishwasher Drain Connection	Yes
Factory Installed Power Cord	Yes

Food waste is roughly 60-95% water. By using your disposal regularly, you can help divert food waste from landfills and reduce greenhouse gas emissions. Many wastewater treatment plants are capable of converting food waste processed by your garbage disposal into renewable energy and beneficial fertilizer. Make sustainability a family affair by using your disposal. After all, the smallest changes can make the biggest impact.

The ONLY manufacturer with disposers INVENTED, DESIGNED & ASSEMBLED in the USA

®/TM © 2025 InSinkErator. All rights reserved.