PROJECT: _____ **ITEM NO.:** _____

CONTROL CENTER MODEL AS-101

INDUSTRY EXCLUSIVE! WATER SAVING CONTROL CENTER

WATER SAVING FEATURES

- The AquaSaver® control center provides an on-demand water-saving system for InSinkErator foodservice disposers
- The AS-101 control center senses the load of the disposer and regulates the amount of water necessary for grinding and non-grinding situations



3 YEAR ON-SITE * PARTS & LABOR WARRANTY

**Standard warranty is 1-year from date of installation. New AquaSaver® control system installations that include a new disposer and new AS-101 control center are eligible for a 3-year warranty on the entire system, including disposer.*

SPECIFICATIONS

STAINLESS STEEL ENCLOSURE
- NEMA 4
- Stainless steel construction
- Easy to clean and keep clean

AUTOMATIC REVERSING CONTROL
- Reverses direction of motor at each startup
- Increases cutting element life and reduces jams

REVERSING DELAY
- Disposer will not reverse while motor is in motion
- Protects motor from burn out from operator misuse

AUTOMATIC DROP OUT SYSTEM
- If a power loss occurs, control will automatically disengage power lines
- Disposer must be restarted

DISCONNECT SWITCH
- Disconnects electrical power beyond switch for service
- Interlock with front cover

SOLID STATE CONTROL
- Operates on 24V

SOLID STATE CONTROL CIRCUIT
- Printed circuit board with control diagnostic/function lights, delay timers and timed run pin and reversing control

POST WATER FLUSH
- Adjustable timer allows water to run automatically for up to 10 minutes, flushing disposer and drain lines after disposer is shut off

TIMED RUN OR CONTINUOUS RUN
- Selected at your discretion, simply by moving the plug-in pin on the printed circuit board
- Timed run shuts off disposer automatically after 10 minutes
- Can be shut off manually any time

SOLENOID VALVE/FLOW CONTROL VALVE
- Two 24V solenoid valves included
- 1 GPM (3.8 LPM) and 7 GPM (26.5 LPM) flow control valves included

DIMENSIONS

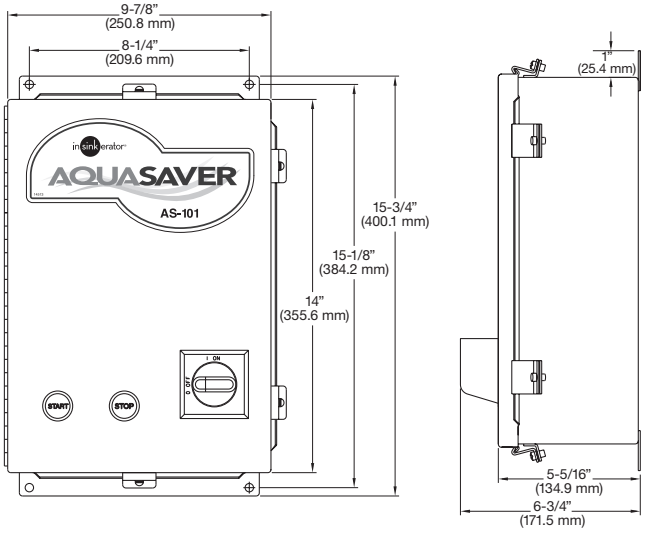

VOLTAGE/PHASE AVAILABILITY

Model	Voltage/Hz	Phase	Disposer Models
AS101K-5	120V, 50/60 Hz	1 Ph	SS-100 to SS-200
AS101K-6	208-240V, 50/60 Hz	1 Ph	SS-100 to SS-200
AS101K-7	208-240V, 50/60 Hz	3 Ph	SS-100 to SS-1000
AS101K-8	380-460V, 50/60 Hz	3 Ph	SS-100 to SS-1000

A complete collection of our product drawings is available for download at the **InSinkErator Revit/CAD** Library, which can be found at www.insinkerator.com/foodservice. Product information is also accessible on ***The KCL CADalog***. More information is available from KCL at www.kclcad.com.

1250 International Drive
Mount Pleasant, WI 53177
TEL: 800-845-8345
www.insinkerator.com/foodservice

c UL us LISTED ISO 9001 QUALITY SYSTEMS CERTIFIED

InSinkErator ©2023 Printed in USA

TYPICAL TROUGH MOUNT APPLICATION

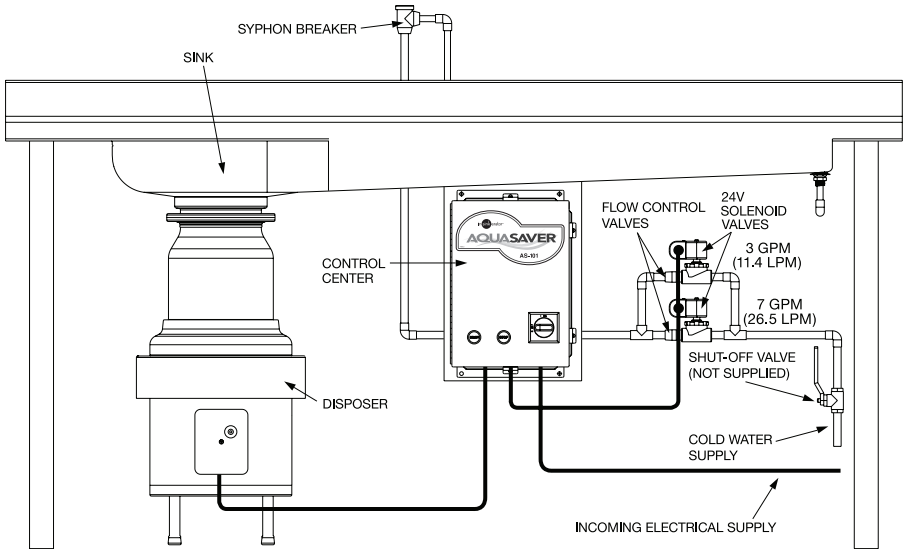

TYPICAL BOWL MOUNT APPLICATION

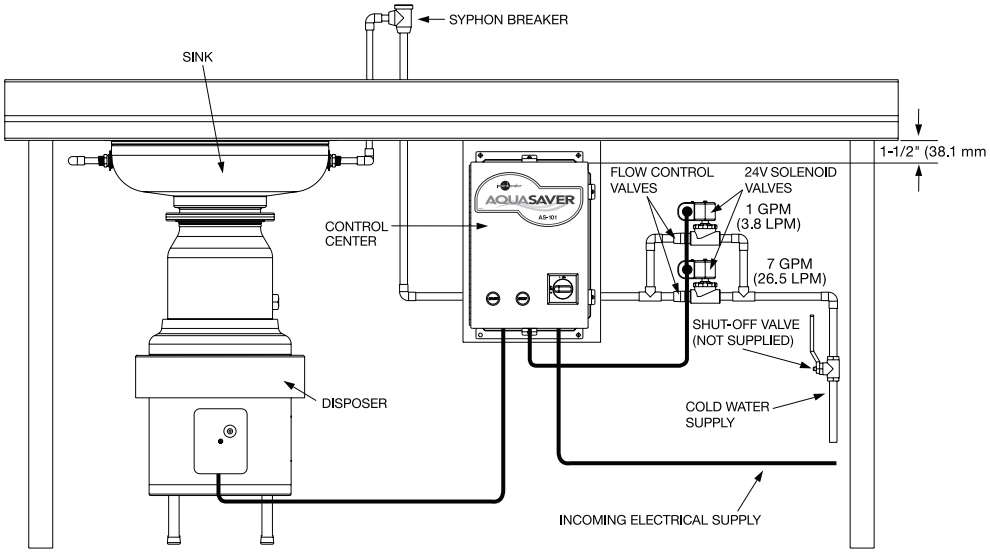

NOTE: The AquaSaver® control center should be mounted 1-1/2" (38.1 mm) back from the front surface of the table.

AS-101 FEATURES

