AquaSaver®
DISPOSER CONTROL CENTER
Installation Manual

Model AS-101K



⚠ WARNING WARNING indicates a hazardous situation which, if not avoided, could result in death or serious injury.

⚠ CAUTION CAUTION indicates a hazardous situation which, if not avoided, could result in minor or moderate injury.

NOTICE NOTICE is used to address practices not related to physical injury.

Please be certain that the person who installs or uses this appliance carefully reads and understands the Safety Instructions contained in this manual.

Table of Contents

Introduction/Features
- Introduction 3
- Features 3

Mounting The Control Center/Plumbing Connections
- Mounting the Control Center 4
- Plumbing Connections 4

Electrical Connection Diagrams 5

Electrical Connections 6

Terminal Block Instructions 7

Operating Instructions/AquaSaver Adjustment
- Operating Instructions 8
- AquaSaver Adjustment 8

Troubleshooting 9

Wiring Diagrams
- Model No. AS-101K-5 (120V, 1 phase, 1/2 - 2 HP) 10
- Model No. AS-101K-6 (208/240V, 1 phase, 1/2 - 2 HP) 11
- Model No. AS-101K-7 (208/240V, 3 phase, 1/2 - 10 HP) 12
- Model No. AS-101K-8 (380/460V, 3 phase, 1/2 - 10 HP) 13

Warranty

FOODSERVICE DISPOSER CONTROL CENTER LIMITED WARRANTY

InSinkErator Foodservice Disposer Control Centers are warranted against defects in material and workmanship for three years from the date of installation. The warranty includes parts and labor, provided the service is performed by an InSinkErator Factory Authorized Service Center. This warranty does not apply if failure is due to: *faulty or improper electrical installation, faulty or improper plumbing installation, product abuse or misuse, or accidental damage.*

Foodservice disposer accessories are included in this warranty only if they are included in the original disposer purchase package.

Introduction/Features

INTRODUCTION

The AS-101K Control Center is CUL® US listed for use with InSinkErator Foodservice Disposers. See Table 1 for electrical specifications. The control center operates the disposer and control center combinations. Its main functions are:

- To start and stop the disposer.
- To reverse the direction of the disposer motor automatically upon restart.
- To start the water flow to the disposer.
- To regulate the amount of water needed for operation. Two solenoid valves are used to control high and low water flows.
- To allow water flow for several minutes to flush the drain line after the disposer is turned off.

Table 1. Electrical Specifications

Model	Voltage	Phase	HP
AS-101K-5	120V	1	1/2-2
AS-101K-6	208/240V	1	1/2-2
AS-101K-7	208/240V	3	1/2-10
AS-101K-8	380/460V	3	1/2-10

FEATURES

AUTOMATIC REVERSE
The disposer motor will reverse its direction of rotation automatically upon restart. To avoid motor damage, a five second delay feature prevents reversing while the motor is coasting.

WATER SHUTOFF DELAY (POST FLUSH)
After the motor is turned off, the water continues to

flow for up to 10 minutes. The length of this post flush is controlled by the water shutoff delay timer. The post flush helps ensure that ground food waste is flushed out of the drain line. Adjust water shutoff delay as described in the operating instructions on page 7.

AUTOMATIC WATER REGULATION
This acts as an on-demand water saving system for InSinkErator Foodservice Disposers. It senses the load of the disposer, and regulates the amount of water necessary for grinding and non-grinding situations. This uses two solenoid valves.

NOTE: When the disposer is first turned on, both solenoids will operate. After the set time has expired, the flow to the disposer will slow to one gallon per minute if there is not food waste present in the grinding chamber.

AUTOMATIC TIMED DISPOSER SHUTOFF
This water saving feature allows the disposer to run for up to 10 minutes before it automatically shuts off and must be manually restarted.

NOTE: This feature is set in the manual position at the factory. To activate the automatic timed disposer shutoff, disconnect the electric power to the control center, then open the control center door. Locate the Dip Switch Module at the top of the printed circuit board (see Figure 8). Move the #5 dip switch from MANUAL to AUTOMATIC. The disposer now automatically shuts off 10 minutes after it starts.

ELECTRIC DISCONNECT SWITCH
The lever switch on the front panel of the control center disconnects the line voltage. It interlocks with the front cover so that the cover cannot be opened unless the switch is in the off position.

NOTE: Use of the electrical disconnect switch results in a 30 second delay before system can be restarted. You must wait 30 seconds after reactivation of the line disconnect switch before system will start.

LOW VOLTAGE CONTROL
Controls operate on a 24 V solid state control circuit.

ENCLOSURE
NEMA 4 construction.

PUSH BUTTON OPERATION
Push Black button to start disposer.
Push Red button to stop disposer.

NOTICE

PROPERTY DAMAGE

Use of more than two solenoid valves will affect the overall function of the AquaSaver® systems. Extra solenoid valves will cause a reduction in voltage and solenoid actuation will not occur.

Mounting the Control Center/Plumbing Connections

MOUNTING THE CONTROL CENTER

Use the flanges at the back of the control center enclosure and only mount panel in the upright vertical position (door hinge is on the left). See Figure 1.

Locate control center within sight of disposer per local codes. Locate any remote control station within sight of disposer per local codes.

If box is mounted to the sink table, recess the box so that the buttons do not extend beyond the table's edge.

PLUMBING CONNECTIONS

Two solenoid valves with flow control valves pre-installed (1 GPM and 7 GPM) are packed with the control center. The syphon breaker is supplied with all complete disposer packages (packed separately).

The solenoid valve is supplied with a 24 V coil. Make certain that the valves are plumbed according to the water flow direction arrows marked on the valve or the valves will not function properly.

The flow control valve regulates all water flowing into the disposer. This conserves water and prevents overloading. Check direction of water flow arrows.

Syphon breaker must be installed above the sink flood plane **per local plumbing codes**. Check direction of

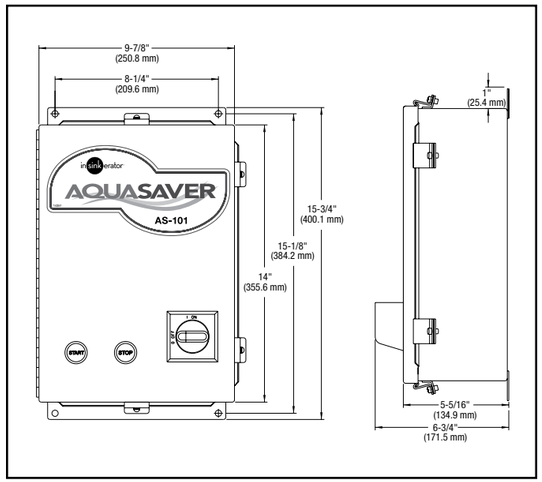

Figure 1. Control Center Dimensions

NOTE: The AS-101K control center requires the use of two solenoid valves and two flow control valves. Figure 2 shows the proper installation for an AS-101K control center.

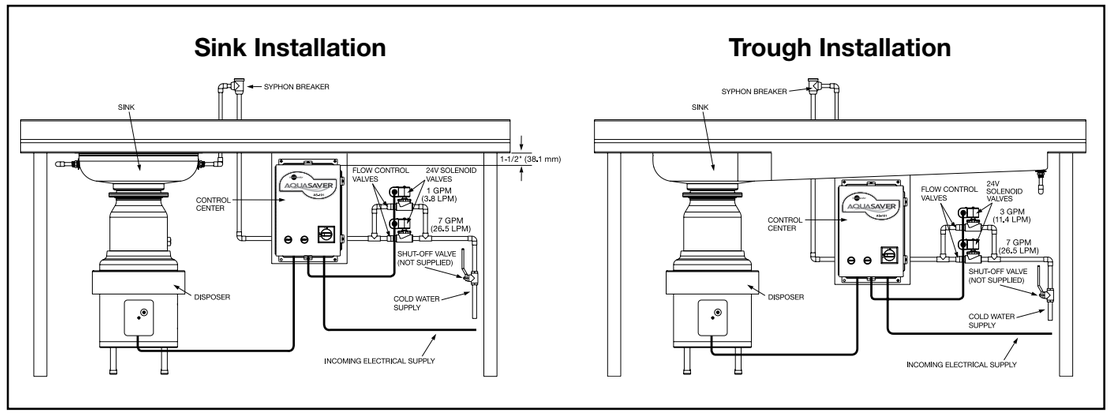

Figure 2.Typical Installation Diagram

Electrical Connection Diagrams

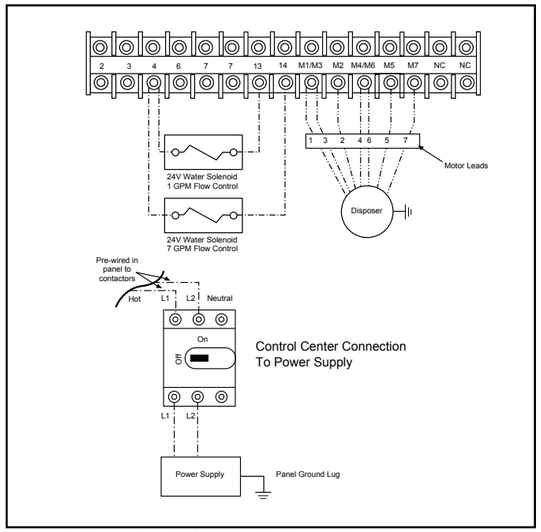

Figure 3. Incoming 120 V Single Phase Line Power

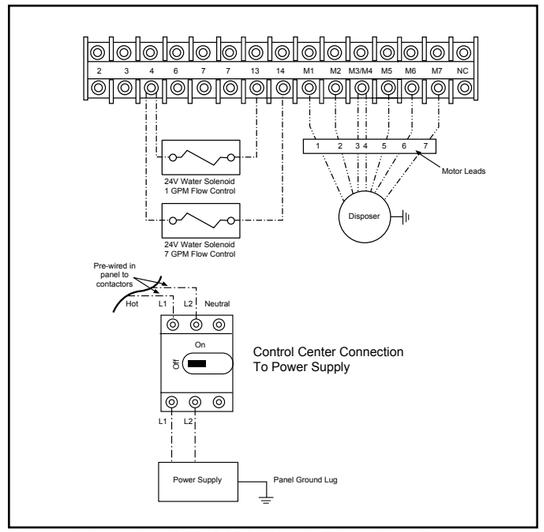

Figure 4. Incoming 208-240 V Single Phase Line Power

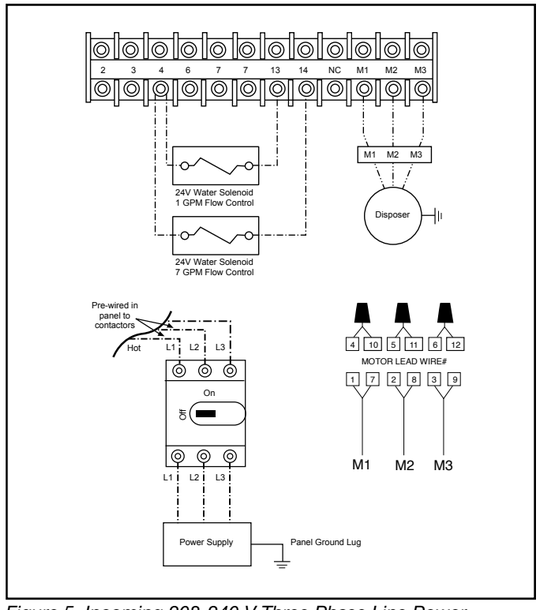

Figure 5. Incoming 208-240 V Three Phase Line Power

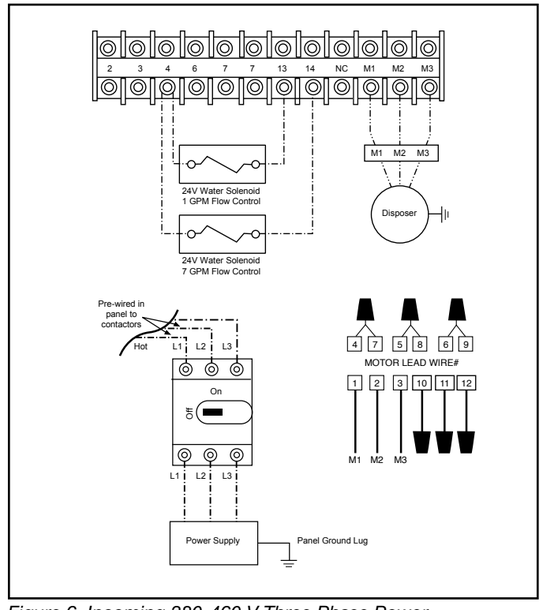

Figure 6. Incoming 380-460 V Three Phase Power

⚠ WARNING

ELECTRIC SHOCK

- Turn off the electrical supply to the disposer before attempting any work on it. Use a voltmeter or circuit tester to ensure that power is off.
- All installation work must conform to local plumbing and electrical codes.
- All control centers and disposers must be carefully and permanently grounded.
- A properly fused disconnect must be installed at the electrical supply source for the control center.
- The control center's door disconnect must be in the off position before the panel door can be opened. Power is still present at the disconnect until power is turned off at the electrical supply source.

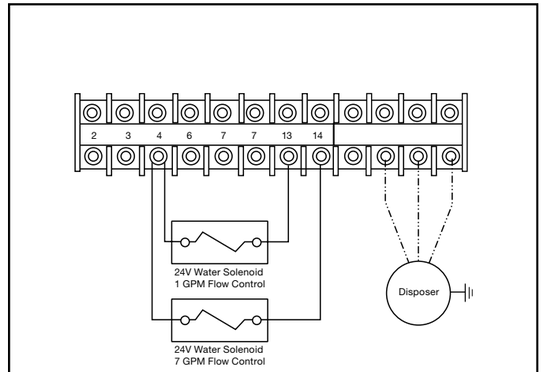

Figure 7. Water Solenoid Valve Wiring

LINE VOLTAGE

Connect the incoming line power to the electrical disconnect switch and connect the disposer motor to labeled terminal blocks in the control center. Use the appropriate voltage and phase electrical connection diagram, Figure 3, 4, 5, or 6.

LOW VOLTAGE

The AS-101K control center uses low voltage (24 V) to operate contactor coils, solid state control circuit, push buttons, and solenoid valves. Red wires denote a 24 V circuit.

WATER SOLENOID VALVE

Two 24 V solenoid valves are supplied with all control centers. Connect one 24 V solenoid valve (in line with the 1 GPM flow control) to terminal 4 and 13, connect the other 24 V solenoid valve (in line with the 7 GPM flow control) to terminal 4 and 14. See Figure 7.

Wire per local electrical code using 7/8" diameter holes in bottom of control center cabinet and install NEMA 4 water-tight electrical connectors.

After completing the connections, replace all terminal block shields, close door, and fasten all locking clamps. Replace disposer motor cover. Turn on power.

Please read the disposer operating instructions and train your personnel before operating the disposer. The operating instructions include:

- Disposer operation
- How to restart the disposer after a jam condition

NOTICE

PROPERTY DAMAGE

- Ensure that control center voltage and phase match the disposer motor and electrical supply. Check name plates on disposer and control centers for voltage and phase specifications.
- Refer to the control center wiring diagrams in this manual for correct connection.
- Use NEMA 4 watertight electrical connectors (not supplied) when making electrical connections to the control center.

⚠ WARNING

PERSONAL INJURY

- Allow only trained personnel to operate disposer.
- Use baffles and guarding to avoid splashing and ejection of materials.
- Do not put fingers or hands into the disposer.
- When attempting to remove objects from a disposer, use long-handled tongs or pliers.
- Turn power off before clearing a jam, removing an object from the disposer or pressing the red reset button. (See Troubleshooting).
- Disconnect electricity before adjusting set points.

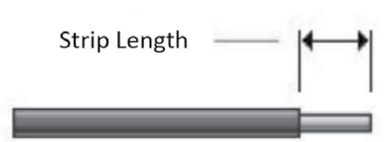

CAUTION

- Incorrect strip length could cause intermittent operation or an electrical short.

1.Strip Wire Insulation Back 7/16" - 1/2" (11-13mm). See Gauge at Corners

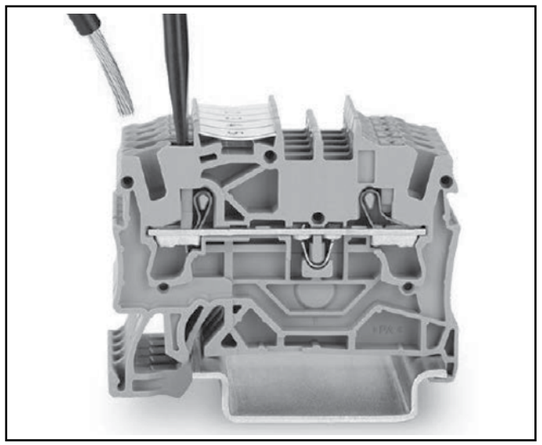

2.Depress Orange Button Adjacent to Desired Terminal Block Hole

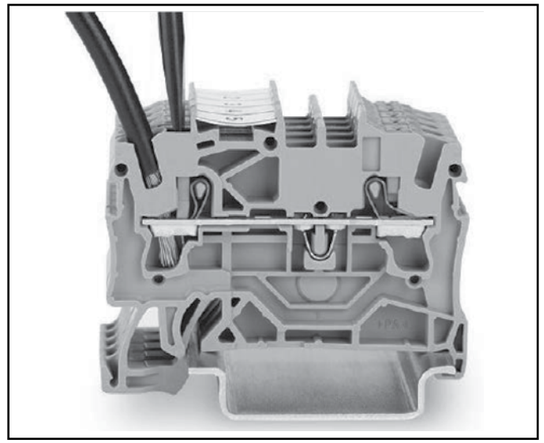

3.Insert Stripped Wire into Hole until Bottoms Out, Release Button

4. Gently pull each on wire to verify it is secure. Insulation should be in hole. Conductors should not be visible.

OPERATING INSTRUCTIONS

TO START

1. Check to ensure disposer is free of foreign objects.
2. Ensure power is on.
3. Push start button. Disposer motor will run and water will flow into the disposer.
4. Water flow will decrease to 1 GPM approximately 30 seconds after intitial start-up if no load is present in disposer.

TO STOP

1. Push stop button. Disposer motor and water will stop.
2. Water may continue to flow into disposer for up to 10 minutes, per the time set on the water shutoff delay timer.

NOTE: This post-flush clears the drain lines of food waste.

⚠ WARNING

PERSONAL INJURY

To adjust the water shutoff delay, disconnect the electrical power to the control panel and open the control center door.

WATER SHUTOFF DELAY ADJUSTMENT

Locate the water shutoff delay at the top of the printed circuit board in the AS-101K (See Figure 8). Set the dip switches for the desired water shut off delay. Use the guide printed on the circuit board to set minutes of delay. The dip switches should be moved to match the filled-in areas of the guide.



Figure 8.

Example 1: Dip switches 1, 2, 3, 4 pushed to the down position will give a 0 minute delay.

Example 2: Dip switches 1, 3, 4 pushed to the up position; and dip switch 2 pushed to the down position will give a 10 minute delay.

AUTOMATIC TIMED DISPOSER SHUTOFF

This water saving feature allows the disposer to run for up to 10 minutes before it automatically shuts off and must be manually restarted.

NOTE: This feature is set in the manual position at the factory. To activate the automatic timed disposer shut-off, disconnect the electric power to the control center, then open the control center door. Locate the Dip Switch Module at the top of the printed circuit board (see Figure 8). Move the #5 dip switch from MANUAL to AUTOMATIC. The disposer now automatically shuts off 10 minutes after it starts.

AquaSaver ADJUSTMENT

⚠ WARNING

ELECTRICAL SHOCK

- Turn off the electrical supply to the disposer before attempting any work on it. Use a voltmeter or circuit tester to ensure that power is off.
- Installation must conform to local plumbing and electrical codes.
- All control centers and disposers must be carefully and permanently grounded.
- A properly fused disconnect must be installed at the electrical supply source for the control center.

CURRENT SENSING CONTROL SET-UP

See Figure 9.

1. Adjust the trip **delay** to mid-setting. This adjusts the length of the time the water runs at full flow after grinding is completed. Mid-setting is approximately 45 seconds.
2. With the disposer running at high water flow:
   a. Adjust the trip **point** control to maximum position, the light is not illuminated.
   b. Turn the trip **point** control counterclockwise until the red fault light is illuminated, **stop**.
   c. Turn the trip **point** control clockwise slowly, stopping **immediately** when the red fault light is no longer illuminated. Turn slightly counterclockwise incrementally with the light remaining off to assure you are at the exact set point. To ensure sensitivity, the trip point must be set at the exact point the light becomes no longer illuminated.

NOTE: Water flow will decrease after trip delay time setting expires.

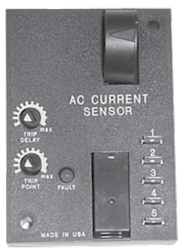

Figure 9.

⚠ WARNING

PERSONAL INJURY

- Allow only trained personnel to operate disposer.
- Use baffles and guarding to avoid splashing and ejection of materials.
- Do not put fingers or hands into the disposer.
- When attempting to remove objects from a disposer, use long-handled tongs or pliers.
- Turn power off before clearing a jam, removing an object from the disposer or pressing the red reset button.

This control center was inspected and tested under operating conditions before shipment from the factory. In case of trouble, check the items listed below.

A. Disposer motor will not start and water does not flow.

1. No incoming line power, turn line power on.
2. Electric disconnect switch is not ON. Turn electric disconnect to ON position.
3. Electrical disconnect switch has been reactivated and 30-second delay has not yet expired. Wait 30 seconds and try starting again.
4. Control circuit fuse FNA2 is blown. Replace fuse.

NOTICE

PROPERTY DAMAGE

Use only an FNA2 replacement fuse. Using another replacement fuse will result in product damage.

B. Disposer motor stops while grinding but water continues to flow.

1. Control center wired for automatic shut-off. Press start button. If disposer runs for 10 minutes then shuts off, the automatic shutoff is active. If the manual setting is desired, change as indicated in the feature section.
2. Disposer is jammed. Press stop button and follow directions for unjamming that were supplied with the disposer.
3. Disposer motor overload protector has tripped. Follow instruction in C1.

C. Disposer will not start but water flows.

1. Overload protector on the disposer may have tripped. Press stop button. Locate red reset button on front of disposer electrical cover. Press to reset. If motor had been running, wait five minutes for the motor and overload to cool down before starting.
2. Disposer is jammed. Press stop button and follow directions for unjamming that were supplied with the disposer.

⚠ WARNING

ELECTRICAL SHOCK/PROPERTY DAMAGE

- Troubleshooting other than what is recommended in this section should only be performed by qualified service personnel.
- Further troubleshooting performed by untrained personnel could result in electric shock or damage to the control center.
- All electrical checks must be performed by a qualified professional.

D. Water flows constantly before start button is pushed.

1. Water solenoid valve is installed backward. Water flow should be in the direction of the arrow on valve.

E. Water flow does not decrease to 1 GPM.

1. Incorrect solenoid valve combination connections. See *Water Solenoid Valve, page 7.*
2. Incorrect trip point adjustment. See *Current Sensing Control Setup*, page 8.
3. Food load is present in disposer.

F. Water flow does not increase.

1. Insufficient food load is present.
2. Incorrect trip point. See *Current Sensing Control Setup*, page 8.
3. Solenoid valve wiring incorrect in panel.
4. More than two water solenoids wired into system. System should have one solenoid with a 1 GPM flow control and one solenoid with a 7 GPM flow control.

NOTE: Use shutoff valves to adjust water flow for multiple trough or sink nozzles.

G. Overload trips frequently.

1. Do not overload disposer with excess amounts of garbage and water (see disposer instructions for recommended water flows).

AS-101K-5 Wiring Diagram

P/N 15255

⚠WARNING

ELECTRICAL SHOCK

- Turn off the electrical supply to the disposer before attempting any work on it. Use a voltmeter or circuit tester to ensure that power is off.
- Installation must conform to local electrical codes.
- All control centers and disposers must be carefully and permanently grounded.
- A properly fused disconnect must be installed at the electrical supply source for the control center.

NOTICE

PROPERTY DAMAGE

- Ensure that the control center voltage and phase match the disposer motor and electrical supply. Check nameplates on disposers and control centers for voltage and phase specification.
- The disposer motor wiring connection is shown in the disposer terminal box.

Note: • Red wires = Low voltage (24 V) control.
• Black wires = Line voltage (120 V) control.

AS-101K-5
120 V
1-phase
1/2 to 2 HP

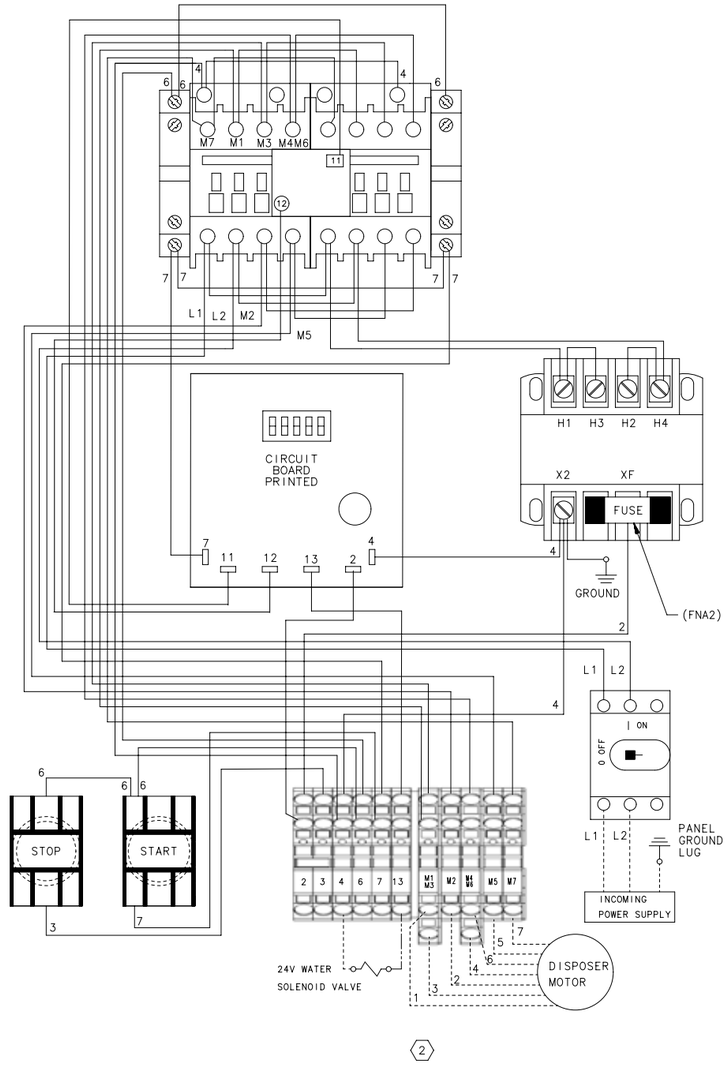

Call Toll Free 1-800-845-8345 for the nearest InSinkErator Authorized Service Agency or to reach Technical Support.

AS-101K-6 Wiring Diagram

P/N 15255A

⚠WARNING

ELECTRICAL SHOCK

- Turn off the electrical supply to the disposer before attempting any work on it. Use a voltmeter or circuit tester to ensure that power is off.
- Installation must conform to local electrical codes.
- All control centers and disposers must be carefully and permanently grounded.
- A properly fused disconnect must be installed at the electrical supply source for the control center.

NOTICE

PROPERTY DAMAGE

- Ensure that the control center voltage and phase match the disposer motor and electrical supply. Check nameplates on disposers and control centers for voltage and phase specification.
- The disposer motor wiring connection is shown in the disposer terminal box.

Note: • Red wires = Low voltage (24 V) control.
• Black wires = Line voltage (208 - 240 V) control.

AS-101K-6
208/240 V
1-phase
1/2 to 2 HP

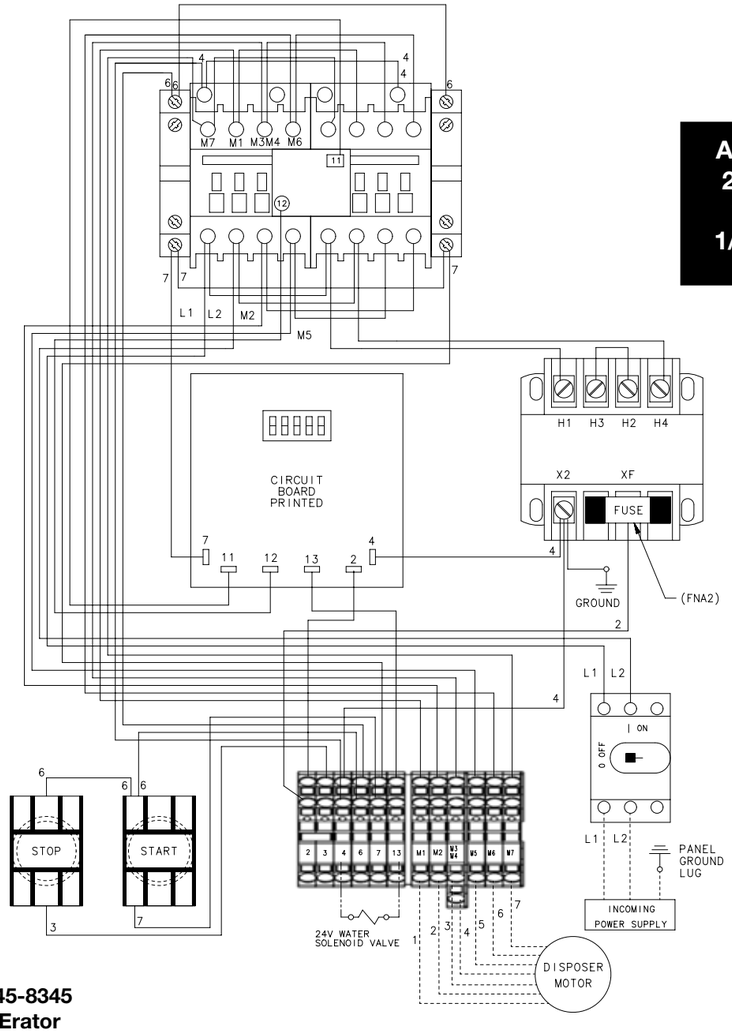

Call Toll Free 1-800-845-8345 for the nearest InSinkErator Authorized Service Agency or to reach Technical Support.

AS-101K-7 Wiring Diagram

P/N 15255B

⚠WARNING

ELECTRICAL SHOCK

- Turn off the electrical supply to the disposer before attempting any work on it. Use a voltmeter or circuit tester to ensure that power is off.
- Installation must conform to local electrical codes.
- All control centers and disposers must be carefully and permanently grounded.
- A properly fused disconnect must be installed at the electrical supply source for the control center.

NOTICE

PROPERTY DAMAGE

- Ensure that the control center voltage and phase match the disposer motor and electrical supply. Check nameplates on disposers and control centers for voltage and phase specification.
- The disposer motor wiring connection is shown in the disposer terminal box.

Note: • Red wires = Low voltage (24 V) control.
• Black wires = Line voltage (208 - 240 V) control.

AS-101K-7
208/240 V
3-phase
1/2 to 10 HP

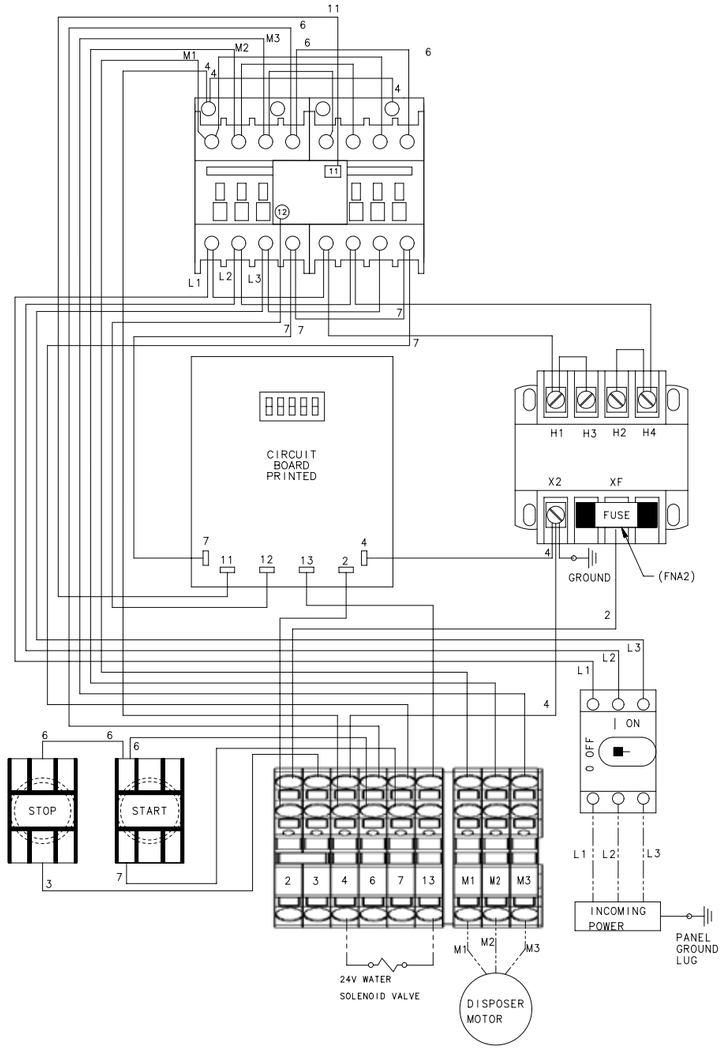

Call Toll Free 1-800-845-8345 for the nearest InSinkErator Authorized Service Agency or to reach Technical Support.

AS-101K-8 Wiring Diagram

P/N 15255C

⚠WARNING

ELECTRICAL SHOCK

- Turn off the electrical supply to the disposer before attempting any work on it. Use a voltmeter or circuit tester to ensure that power is off.
- Installation must conform to local electrical codes.
- All control centers and disposers must be carefully and permanently grounded.
- A properly fused disconnect must be installed at the electrical supply source for the control center.

NOTICE

PROPERTY DAMAGE

- Ensure that the control center voltage and phase match the disposer motor and electrical supply. Check nameplates on disposers and control centers for voltage and phase specification.
- The disposer motor wiring connection is shown in the disposer terminal box.

Note: • Red wires = Low voltage (24 V) control.
• Black wires = Line voltage (380 - 460 V) control.

AS-101K-8
380/460 V
3-phase
1/2 to 10 HP

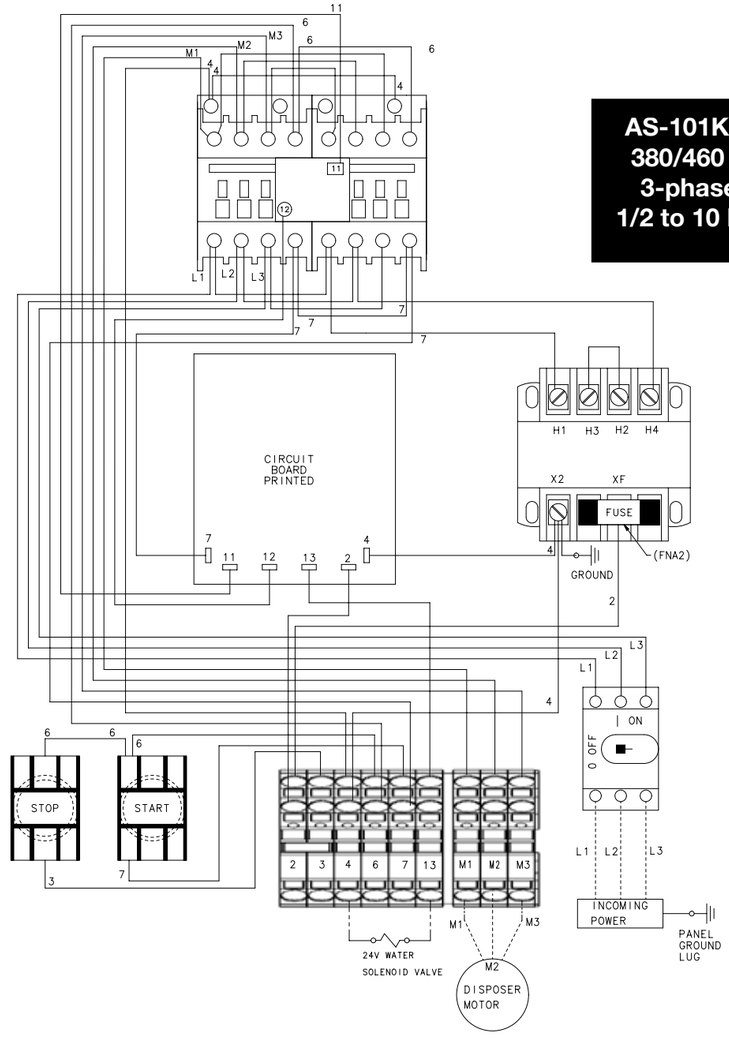

Call Toll Free 1-800-845-8345 for the nearest InSinkErator Authorized Service Agency or to reach Technical Support.