FAHRENHEAT®

FUH Garage / Utility Heater





- **RUGGED, HEAVY DUTY**
  – INDUSTRIAL GRADE UNIT HEATER
- **PLATE-FINNED ELEMENT DESIGN**
  – UNIFORM HEAT OUTPUT
- **CONTROL YOUR COMFORT**
  – BUILT-IN THERMOSTAT
- **SAVE TIME AND MONEY ON INSTALLATION**
  – 'OUT OF THE BOX' SET-UP
- **APPLICATIONS INCLUDE:**
  – FACTORIES
  – STORES
  – GARAGES
  – BASEMENTS
  – WAREHOUSES
  – PUBLIC BUILDINGS
  – SERVICE STATIONS
  – STOCKROOMS
  – WORKSHOPS
  – *AND MUCH MORE*

c UL® US

SELECTION CHART

CATALOG NUMBER	VOLTS	WATTS	BTU/HR	PHASE	HP or FAN MOTOR WATTS	CONTROL CIRCUIT & FAN MOTOR VOLTS	FAN MOTOR RPM	AIR VOLUME CFM	THROW	MIN. MTG. HT.	HEATER AMPS	WT. (LBS.)
		1874	6396								9.0	
	208	2500	8553			208					12.0	
		3123	10659								15.0	
FUH54		3750	12799	1	6		1350	270	16'	6'	18.0	24
		2500	8533								10.4	
	240	3332	11365			240					13.9	
		4165	14215								17.4	
		5000	17065								20.9	
		2812	9598								13.5	
	208	3750	12799			208					18.0	
		4685	15990								22.5	
FUH724		5625	19198	1	6		1400	270	18'	8'	27.1	27
		3750	12799								15.6	
	240	5000	17065			240					20.8	
		6250	21331								26.0	
		7500	25598								31.3	
FUH1024T	240	10000	34120	1-3	1/10hp	240	1550	500	20'	9'	41.7 / 25.7	62

FEATURES

- All motors and contactor coils are line voltage or operate on internal step down transformers so a separate fan and motor control power source is not needed.
- Steel fins are copper brazed to low watt density, steel-sheathed tubular heating elements.
- Element is finished with aluminized paint for corrosion resistance.
- A high-limit cutout automatically shuts off current in event of overheating and reactivates the heater when temperature returns to normal.
- Epoxy paint finish. Cabinet is finished with an epoxy coating for excellent corrosion resistance. The color is neutral grey.
- Heater is shipped with a ceiling-mount bracket that allows the heater to be used in four indexed positions — straight out (horizontal), straight down (downflow), and two intermediate positions, as well as any positions in between.
- Easy to install and service. Remove one screw and bottom control box cover swings down on hinges for full access to controls and wiring.
- Built-in thermostat - Dial up or down for precise heating comfort with single-pole built-in thermostat. Temperature range 45ºF to 135ºF.
- Automatic fan control - All heaters are equipped with an automatic fan delay control that delays fan action until the heating element is warm, and continues fan action until the heating element has cooled after the heating cycle.
- Thermal cutout - A high limit thermal cutout automatically shuts off the heater in the event of overheating and reactivates it when operating temperatures return to normal.

FUH1024T MOUNTING BRACKETS

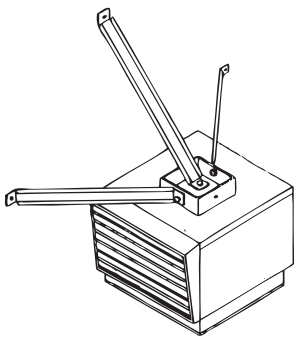

Wall mounting

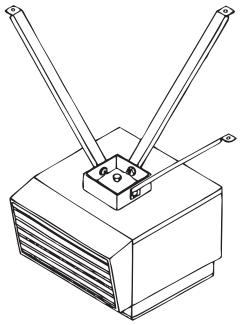

Ceiling mounting

FUH54 & FUH724 DIMENSIONS

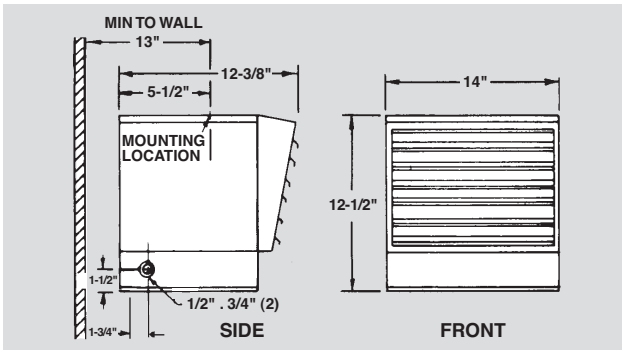

FUH1024T DIMENSIONS

