Design & Installation Manual

(BK-) CRGX and LSRX Series Cable with -CR Suffix

Approved with Connection Kits

KQYI/KQYI7	E552707	Residential Pipe – heating Cable
KQXR/KQXR7	E515828	Industrial and Commercial Pipe-heating Cable
KOBQ/KOBQ7	E515829	De-icing and Snow-melting Equipment



MEP-HT-CPCGFEP-1

Plug in Connection Kit



MEP-HT-CPCG-1

Hardwire Connection Kit
(not approved KQYI/KQYI7)

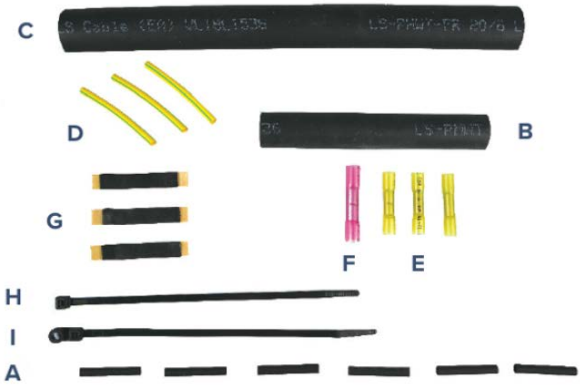

MEP-HT-CTS-1

Tee and Splice Connection Kit



MEP-HT-CES-1

End Seal Kit

Part 1: GENERAL INFORMATION

1. Introduction

(BK-)LSRX/CRGX self-regulating heating cable is designed for BOTH Pipe Heating and De-icing and Snow-melting applications. Therefore, this manual is divided into two different design instructions. Part 2 is for pipe heating and Part 3 is for De-icing and snow-melting applications.

Berko's Heat Tracing Solution offers a full range of connection kits for power connection, tee or splice connection, and end seal. Use of these connection kits is recommended to ensure proper functioning and service life of the product. These instructions are for qualified persons involved in the designs, installation, operation and maintenance of electric trace heating cable systems.

Each circuit requires either MEP-HT-CPCGFEP-1 plug-in or MEP-HT-CPCG-1 hard-wired power connection kit. MEP-HT-CPCGFEP-1 is designed to provide cord-and-plug power connection with a grounding type attachment plug, while MEP-HT-CPCG-1 provides permanent hard-wired power connection intended only for industrial and/or commercial applications. Therefore, (BK-)LSRX/CRGX self-regulating heating cable shall not use MEP-HT-CPCG-1 hard-wired power connection kit for residential application.

2. Warnings

Heat-tracing systems must be installed correctly to ensure proper operation and to prevent shock and fire. Read these important warnings and carefully follow all the installation instructions

To minimize the danger of fire from sustained electrical arcing if the heating cable is damaged or improperly installed, and to comply with Berko requirements, agency certifications, national electrical codes, ground-fault equipment protection must be used on each heating cable branch circuit. Arcing may not be stopped by conventional circuit breakers.

- Approvals and performance of the heat-tracing systems are based on the use of Berko specified parts only. Do not substitute parts or use vinyl electrical tape.
- Bus wires will short if they contact each other. Keep bus wires separated.
- Components and cable ends must be kept dry before and during installation.
- The black heating cable cores are conductive and can short. They must be properly insulated and kept dry.
- Damaged bus wires can overheat or short. Do not break bus wire strands when preparing the cable for connection.
- Damaged heating cable can cause electrical arcing or fire. Do not use metal attachments such as pipe straps or tie wire. Use only Berko approved cables and cable ties to secure the cable to the pipe.
- Do not attempt to repair or energize damaged cable. Remove damaged cable at once and replace with a new length using the appropriate Berko splice kit. Replace damaged components.
- Re-use of the grommets, or use of the wrong grommet, can cause leaks, cracked components, shock, or fire. Be sure the type of grommet is correct for the heating cable being installed. Use a new grommet whenever the cable has been pulled out of the component.
- Use only fire-resistant insulation which is compatible with the application and the maximum exposure temperature of the system to be traced.
- The minimum installation temperature for (BK-)LSRX/CRGX heating cable is -58°F (-50°C), and the minimum installation temperature of the connection kits is 5°F (–15°C).

3. Safety Guidelines

- De-energize all power circuits before installation or servicing.
- Terminate and install all cables according to the manufacturer's instructions.
- Do not use an extension cord.
- Keep ends of heating cable and kit components dry before and during installation.
- Only use this equipment in areas subject to low risk of mechanical damage.
- Arcing may not be stopped by conventional circuit protection.
- Only qualified persons of end user, shall design and install ground fault equipment, circuit breaker, thermal insulation to cover the heating cable on the pipes, and service continued circuit operation, maintenance and supervision.
- Connect only to ground-fault protected outlets that have been installed in accordance with all prevailing national/local codes and standards and are protected from rain and other water.
- Ground fault equipment protection is required for each circuit, usually set at 30 mA with a nominal 100-ms response time.
- The metallic braid, sheath, or equivalent electrically conductive layer of the heating device must be connected to a suitable grounding/earthing terminal.

4. National Electrical Codes requirements

- Sections 426 (outdoor electric deicing and snow-melting equipment) and 427 (pipelines and vessels) of the National Electrical Code (NEC), and Part 1 of the Canadian Electrical Code, Sections 62 (Fixed Electric Space and Surface Heating), govern the installation of electrical heat-tracing systems. All heat-tracing-system installations must be in compliance with these and any other applicable national or local codes
- Ground-fault equipment protection must be used on each heating cable branch circuit. Arcing may not be stopped by conventional circuit breakers.

5. Warranty

In order to maintain validity of warranty coverage of the electric trace heating cable systems, you must follow the steps in this manual including instructions, testing and required documentation of the installation/test report.

6. Complete (BK-)LSRX/CRGX Electric Heat Trace System

A complete electric heat trace system includes the following components:

A. (BK-)LSRX/CRGX self-regulating heating cable
B. Power Connection kits suitable for use with (BK-)LSRX/CRGX heating cable series
   - MEP-HT-CPCGFEP-1: Plug-in power connection kit
     Per the National Electrical Code (NEC), Article 426.90 B, cord and plug construction products are limited to 20A circuit breaker maximum. Make sure your branch circuit is limited to a maximum 20A for MEP-HT-CPCGFEP-1.
     Per UL 2049, Section 5.1 a grounding type attachment plug is included in the kit for residential applications.
   - MEP-HT-CPCG-1: Hard-wired power connection kit using plastic cord connector
     Note: MEP-HT-CPCG-1 are not allowed to be used for KQYI/KQYI7 residential application.
     Use MEP-HT-CPCGFEP-1 connection with cord and plug for residential pipe heating.
C. Tee or splice connection kit – MEP-HT-CTS-1 (optional)
D. End seal kit – MEP-HT-CES-1 (required only where necessary as end of circuit)
E. “Warning” or “Caution” labels
F. RTD sensor or control thermostat (optional)

The absence of any of these items can cause a safety hazard.

NOTE

- See heating cable types and ratings for approvals in Part 2 and Part 3 depending on your application.
- Junction box and/or Receptacle and all other components must be listed for US and certified for Canada for the specific location.
- Temperature control is recommended for all freeze-protection and temperature-maintenance applications.
- All heat-traced lines must be thermally insulated for pipe heating applications.

7. Receipt and storage

7.1 Check materials received

- Review the heating cable design and compare the list of materials to the catalog numbers of heating cables and components received to confirm that proper materials are on site. The heating cable type and voltage is printed on its jacket.
- Ensure that the heating cable voltage rating is suitable for the service voltage available.
- Inspect the heating cable and components for in-transit damage.
- Verify that there no holes in the heating cable jackets by conducting the insulation resistance test on each reel of cable Refer to Part 2 section 1.3 or Part 3 section 1.2.

7.2 Storage

- The heating cables and connecting components must be stored in a clean and dry environment.
- During storage, any contacts with chemicals and petrochemical products should be avoided.
- It should be ensured that the heating cables are protected against mechanical damage during storage.
- The storage temperature must not exceed +60 °C or drop below -40 °C.
- If heating cables and connection kits are stored only for a short time in damp rooms, or on the construction site, it is essential that they are effectively protected from moisture.

Part 2: PIPE HEATING SYSTEM DESIGN AND INSTALLATION

1. Before installation

1.1 Introduction

- Time scheduling of installation of the (BK-)LSRX/CRGX heating cable system must be coordinated with other installation work, particularly with work on the pipe, tank or vessel, electrical installation and thermal insulation.
- All installation work on the tank or vessel and the pipe systems connected to these must have been completed.
- Mechanical tests and material tests on the tank or vessel and the pipe systems connected to these must have been completed and cleared by the client for tracing before installation of the heating cable system is started.
- Coated and painted pipes and surfaces must be completely dry before installation is commenced. Complete drying and outgassing takes about 3 weeks.

1.2 Warnings

- Install only in accessible locations; do not install behind walls, ceilings, or floors.
- The presence of the heating devices shall be made evident by the posting of Caution Labels, "CAUTION Electrical Heat", and shall be posted at appropriate locations and/or at frequent intervals along the circuit. One label for every 10 feet (3 m) of pipe, alternating on either side of the pipe, to be attached to the outside of the thermal insulation weather barrier.
- Be sure all piping and equipment to be traced have been completely installed and pressure-tested.
- Ensure that all surface areas where the trace heater is to be installed are reasonably clean. Remove any dirt, rust, and scale with a wire brush. Remove oil and grease films with a suitable solvent.
- Inspect for burrs, rough surfaces, or sharp edges. Remove if necessary.
- De-energize power sources before installation.
- Keep ends of trace heaters and kit components dry before and during the installation.
- Check whether the material which you require for installing the electric trace heating system is all available on the construction site, and is undamaged.
- It is particularly important to check whether the marking on the heating cable and components agrees with the project planning documents (material list) and test certificates.
- With the aid of the installation instructions accompanying the product check whether all the tools required are completely available.
- Walk the system and plan the routing of the heating cable on the pipe, tank or vessel

1.3 IR Test

The insulation resistance (IR) test establishes the electrical integrity of the trace heater. For the flexible trace heaters covered in this document, the IR test should be performed with a megger capable of delivering a voltage of at least 500 Vdc.

- If not done already, prepare the conductors of the trace heater according to the instructions accompanying the power and end termination kit(s) provided with the system.
- Connect the megger's positive lead to the cable bus wires, shorted together.
- Connect the megger's negative lead to the metallic braid.
- Set the megger test voltage to 500 Vdc.
- Energize the megger for 60 seconds.
- Readings of at least 20 MΩ are acceptable.

Readings below 20 MΩ usually indicate that the electrical insulation of the trace heater has been compromised. Check the trace heater for signs of physical damage between the braid and the heating element. Small cuts or scuff marks on the outer jacket will not affect the megger reading unless there is penetration through the braid and dielectric insulation jacket.

1.4 General Installation Guidelines

- (BK-)LSRX/CRGX heating cable may be used on metal and plastic water pipes but not on flexible vinyl tubing, such as garden hoses, and are not intended for use inside any pipes, for freeze protection of liquids other than water, or for use in classified hazardous locations.
- Install with a minimum of 1/2" fire-resistant, waterproof thermal insulation.

- Never use on any pipes that may exceed 65°C (150°F).
- All actual lengths installed should be recorded. The manufacturer or installer should provide as built drawings and data.
- For the installation of this heating system use only components (wire, connectors, etc.) listed for the U.S and certified for Canada that have suitable ratings for the application.
- This heating system must be installed per NFPA 70, National Electrical Code (NEC) and CAN/CSA-C22.1, Canadian Electrical Code, Part1(CEC)"
- If/For the non-heating leads may be shortened, the markings must be retained.

2. Model, Usages and Rating

Model	UL Category	Designation	Rated Output	Voltages	Usage	Location
(BK-)LSRX/CRGX	KQXR KQXR7	Industrial and Commercial	Up to 10W/ft	120V 208V 240V 277V	-W (with wet rating)	Ordinary location
	KQYI KQYI7	Residential				

2.1 Maximum cable circuit length according to circuit breaker selection

2.1.1 Industrial and Commercial Application

Model	Start-Up Temp. °F (°C)	Maximum Circuit Length per Circuit Breaker, feet 120V				240V			
		15A	20A	30A	40A	15A	20A	30A	40A
(BK-)LSRX03/CRGX03	50 (10)	327	377	377	377	654	732	732	732
	32 (0)	262	350	377	377	525	700	732	732
	0 (-18)	200	266	377	377	400	533	732	732
	-20 (-29)	173	231	346	377	346	461	692	732
	-40 (-40)	152	203	305	377	305	406	610	732
(BK-)LSRX05/CRGX05	50 (10)	200	267	302	302	400	533	604	604
	32 (0)	166	222	302	302	333	444	604	604
	0 (-18)	126	168	252	302	252	336	504	604
	-20 (-29)	110	146	220	293	220	293	439	586
	-40 (-40)	97	130	195	259	195	259	389	519
(BK-)LSRX08/CRGX08	50 (10)	154	205	243	243	307	409	482	482
	32 (0)	131	175	243	243	262	350	482	482
	0 (-18)	104	138	207	243	207	276	415	482
	-20 (-29)	92	122	184	243	184	245	367	482
	-40 (-40)	82	110	165	219	165	219	329	439
(BK-)LSRX10/CRGX10	50 (10)	125	167	207	207	250	334	410	410
	32 (0)	110	146	207	207	220	293	410	410
	0 (-18)	90	120	179	207	179	239	359	410
	-20 (-29)	81	107	161	207	161	215	322	410
	-40 (-40)	73	97	146	195	146	195	292	390

Per National Electrical Code (NEC), Clause 427.55 (B), cord and plug construction products are limited to 20A circuit breaker maximum.

MEP-HT-CPCGFEP-1 plug-in power connection kit with equipment ground fault protection device is limited to 15A circuit breaker maximum and therefore shall not exceed maximum circuit length values given under 15A circuit breaker size in the chart above.

2.1.2 Residential Application

Model	Start-Up Temperature °F (°C)	Maximum Circuit Length per Circuit Breaker, feet 120V 15A	120V 20A	240V 15A	240V 20A
(BK-)LSRX03/CRGX03	50 (10)	327	377	654	732
	32 (0)	262	350	525	700
	0 (-18)	200	266	400	533
	-20 (-29)	173	231	346	461
	-40 (-40)	152	203	305	406
(BK-)LSRX05/CRGX05	50 (10)	200	267	400	533
	32 (0)	166	222	333	444
	0 (-18)	126	168	252	336
	-20 (-29)	110	146	220	293
	-40 (-40)	97	130	195	259
(BK-)LSRX08/CRGX08	50 (10)	154	205	307	409
	32 (0)	131	175	262	350
	0 (-18)	104	138	207	276
	-20 (-29)	92	122	184	245
	-40 (-40)	82	110	165	219
(BK-)LSRX10/CRGX10	50 (10)	125	167	250	334
	32 (0)	110	146	220	293
	0 (-18)	90	120	179	239
	-20 (-29)	81	107	161	215
	-40 (-40)	73	97	146	195

Per UL2049, Section 5.1, constructions without a cord and plug are not permitted for residential pipe applications. The flexible cord shall not be more than 6 feet in length and shall be terminated by a grounding type attachment plug.
Per National Electrical Code (NEC), Clause 427.55 (B), cord and plug construction products are limited to 20A circuit breaker maximum.
MEP-HT-CPCGFEP-1 plug-in power connection kit with equipment ground fault protection device is limited to 15A circuit breaker maximum and therefore shall not exceed maximum circuit length values given under 15A circuit breaker size in the chart above.

2.2 Circuit length adjustment factor

Voltage	(BK-)LSRX03/CRGX03-2	(BK-)LSRX05/CRGX05-2	(BK-)LSRX08/CRGX08-2	(BK-)LSRX10/CRGX10-2
208V	0.969	0.957	0.925	0.920
240V	1.000	1.000	1.000	1.000
277V	1.054	1.065	1.088	1.120

2.3 Power adjustment factor

Voltage	(BK-)LSRX03/CRGX03-2	(BK-)LSRX05/CRGX05-2	(BK-)LSRX08/CRGX08-2	(BK-)LSRX10/CRGX10-2
208V	0.800	0.820	0.880	0.910
240V	1.000	1.000	1.000	1.000
277V	1.190	1.170	1.120	1.100

2.4 Diagram

Size of Lead wire Per NEC/CEC
16 AWG (1.5sq.mm) for less than 2,000W
14 AWG (2.5sq.mm) for more than 2,000W

Equipment Diagram

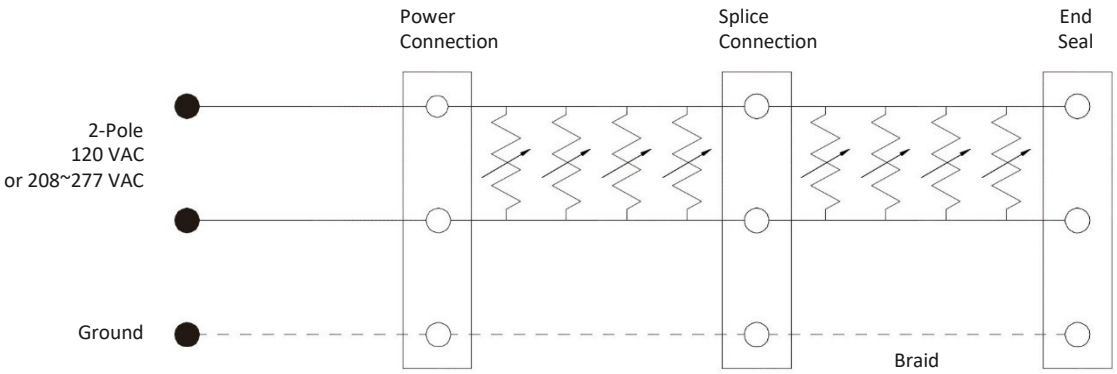

3. Heating Cable Installation

3.1 Additional Items required but not supplied for pipe applications

- Ground-fault protected outlet (GFCI) unless supplied within power connection kit
- Waterproof thermal insulation
- Fiberglass tape or aluminum tape

3.2 Setting and pulling cable

- Use a stable holding device for unwinding the heating cable from the coil.
- Remove the heating cable in a straight line from the coil.
- Do not bend or pinch the heating cable, or pull it over sharp edges.
- Do not tread on or drive over the heating cable; do not use it as a loop for stepping on.
- The ends of the heating cable are always fitted with a protective cap.

3.3 Determine (BK-)LSRX/CRGX Heating Cable Length for Pipe Freeze Protection

Refer to below 3.4 chart to select heating cables for either insulated metal pipes or insulated plastic pipes. Find the diameter of pipe below and cross reference with the expected minimum ambient temperature for the recommended cable. For cables with rated output higher than 5W/ft, please contact manufacturer representative for design and recommendation of cables. Any other method of installation or application shall be considered by qualified persons.

Additional length to add to the total heating cable length

- Valves or spigots: Add 1 foot
- Pipe Supports, flanges: Add 2 feet
- Globe valves: Add 4 feet
- MEP-HT-CPCGFEP-1& MEP-HT-CPCG-1: add 1 foot for power connection
- MEP-HT-CTS-1: add 2 feet for splice connection, and 3 feet for tee connection

Example 1

- Pipe Size: 1 inch
- Insulation Thickness: 1/2”
- Minimum Ambient Temperature: 0 ºF
- Metal Pipe: Single tracing with (BK-)LSRX03/CRGX03 or (BK-)LSRX05/CRGX05
- Non-Metallic Pipe: Multiple tracing with two (BK-)LSRX03/CRGX03 or Single tracing with (BK-)LSRX05/CRGX05

3.4 Heating Cable Selection Chart

This chart is designed to speed selection of the appropriate wattage of cable when used for freeze protection. Find the diameter of pipe below and cross reference with the expected minimum ambient temperature for the recommended cable. For cables with rated output higher than 5W/ft, please contact an Berko representative for safe and proper design and recommendation of cables. ***Series includes Prefix BK-**

<table>
<tr><th colspan="5">Metal Pipe</th><th colspan="5">Non-Metallic Pipe</th></tr>
<tr><th rowspan="2">Insulation Thickness</th><th rowspan="2">Pipe Diameter</th><th colspan="3">Min. Ambient Temperature</th><th rowspan="2">Insulation Thickness</th><th rowspan="2">Pipe Diameter</th><th colspan="3">Min. Ambient Temperature</th></tr>
<tr><th>-18 ºC (0 ºF)</th><th>-30 ºC (-22 ºF)</th><th>-40 ºC (-40 ºF)</th><th>-18 ºC (0 ºF)</th><th>-30 ºC (-22 ºF)</th><th>-40 ºC (-40 ºF)</th></tr>
<tr><td rowspan="9">1/2"</td><td>1/2"</td><td colspan="3" rowspan="2">03 or 05 LSRX/CRGX</td><td rowspan="9">1/2"</td><td>1/2"</td><td rowspan="2">03/05 LSRX/CRGX</td><td>2 of</td><td></td></tr>
<tr><td>3/4"</td><td rowspan="2">03/05 LSRX/ CRGX</td><td></td></tr>
<tr><td>1"</td><td colspan="3" rowspan="3">2* LSRX03/CRGX03 or LSRX05/CRGX05</td><td>1"</td><td colspan="3" rowspan="3"></td></tr>
<tr><td>1-1/2"</td><td>1-1/2"</td></tr>
<tr><td>2"</td><td>2"</td></tr>
<tr><td>2-1/2"</td><td colspan="3" rowspan="4">3* LSRX03/CRGX03 or 2* LSRX05/CRGX05 and/or thicker Insulation</td><td>2-1/2"</td><td colspan="3" rowspan="4">3* LSRX03/CRGX03 or 2* LSRX05/CRGX05 and/or thicker Insulation</td></tr>
<tr><td>3"</td><td>3"</td></tr>
<tr><td>4"</td><td>4"</td></tr>
<tr><td>6"</td><td>6"</td></tr>
<tr><td rowspan="9">1"</td><td>1/2"</td><td colspan="3" rowspan="4">03 or 05 LSRX/CRGX</td><td rowspan="9">1"</td><td>1/2"</td><td colspan="3" rowspan="2">03 or 05 LSRX/CRGX</td></tr>
<tr><td>3/4"</td><td></td></tr>
<tr><td>1"</td><td colspan="3" rowspan="2"></td><td>1"</td><td colspan="3" rowspan="2"></td></tr>
<tr><td>1-1/2"</td><td>1-1/2"</td><td colspan="3">2 of 03 LSRX/CRGX or</td></tr>
<tr><td>2"</td><td colspan="3" rowspan="2"></td><td>2"</td><td colspan="2" rowspan="2">05 LSRX/CR GX</td><td></td></tr>
<tr><td>2-1/2"</td><td colspan="3" rowspan="2"></td><td>2-1/2"</td><td colspan="3" rowspan="2"></td></tr>
<tr><td>3"</td><td colspan="3" rowspan="2">2 of 03 LSRX03/CRGX03 or LSRX05/CRGX05</td><td>3"</td><td colspan="3" rowspan="2">3*03 LSRX/CRGX or 2*05 LSRX/CRGX and/or thicker Insulation</td></tr>
<tr><td>4"</td><td>4"</td></tr>
<tr><td>6"</td><td colspan="3"></td><td>6"</td></tr>
</table>

Metal Pipe			Non-Metallic Pipe		
Insulation Thickness	Pipe Diameter	Min. Ambient Temperature	Insulation Thickness	Pipe Diameter	Min. Ambient Temperature
1-1/2"	1/2"	03 or 05 LSRX/CRGX	1-1/2"	1/2"	03 or 05 LSRX/CRGX
	3/4"			3/4"	
	1"			1"	
	1-1/2"			1-1/2"	
	2"			2"	
	2-1/2"			2-1/2"	2 of LSRX03/CRGX03 or LSRX05/CRGX05
	3"			3"	
	4"	2 of LSRX03/CRGX03 or LSRX05/CRGX05		4"	
	6"			6"	3* LSRX03/CRGX03 or 2* LSRX05/CRGX05
2"	1/2"	03 or 05 LSRX/CRGX	2"	1/2"	3 or 5 LSRX/CRGX
	3/4"			3/4"	
	1"			1"	
	1-1/2"			1-1/2"	
	2"			2"	
	2-1/2"			2-1/2"	
	3"			3"	2 of LSRX03/CRGX03 or LSRX05/CRGX05
	4"	2 of LSRX03/CRGX03 or LSRX05/CRGX05		4"	
	6"			6"	

- Design based on straight runs of cable or pipe. Spiraling is not required.
- Heat loss is based on 40°F maintenance temperature and fiberglass insulation k=0.25 at 50°F
- Non-metallic pipe heat losses are based on using aluminum tape for improving heat transfer.
- For larger pipe sizes, the insulation thickness shall be considered by qualified persons.

3.5 Prepare for Installation

- The heating cable and components have to be stored in a dry place at an ambient temperature between -30 and +60 °C (-22°F and 140 °F).
- Do not store materials in areas with a lot of traffic where potential damages may occur.
- Before installing the cable, complete piping pressure test, remove any sharp surfaces on the pipe that might damage the heating cable.
- Walk the system and plan the tracing of the heating cable on the pipe.

3.6 Position and Attach Heating Cable to Pipe

- Make sure all piping to be traced is dry.
- Install cable straight or spiral-traced and the additional for valves, flanges, etc., as Figure 1, 2.
- For straight tracing, install heating cable on a lower half of the pipe, as Figure 1; for example, at the 4 o'clock or 8 o'clock position.
- Minimum cable to cable on center spacing for wraps is 15.2cm (6") at -15°C (5°F)
- Fasten heating cable to the pipe at 1-foot intervals using fiberglass application tape. Do not use vinyl electrical tape, duct tape, metal bands, or wire.
- If excess cable remains at the end of the pipe, double it back along the pipe.

Figure 1. Straight-traced

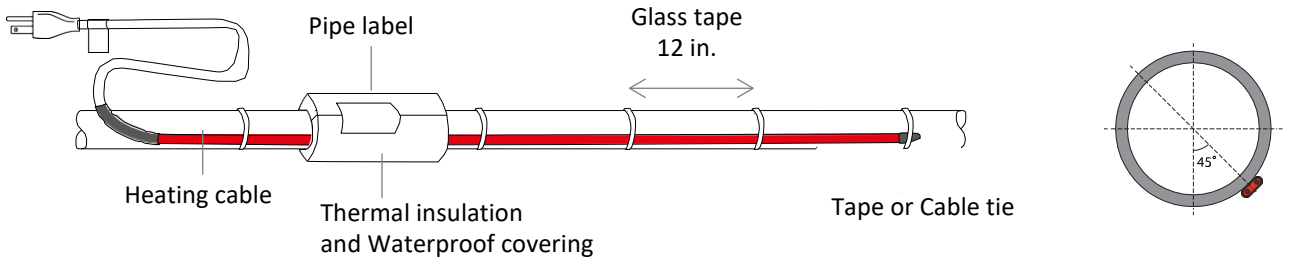

Figure 2. Spiral-traced

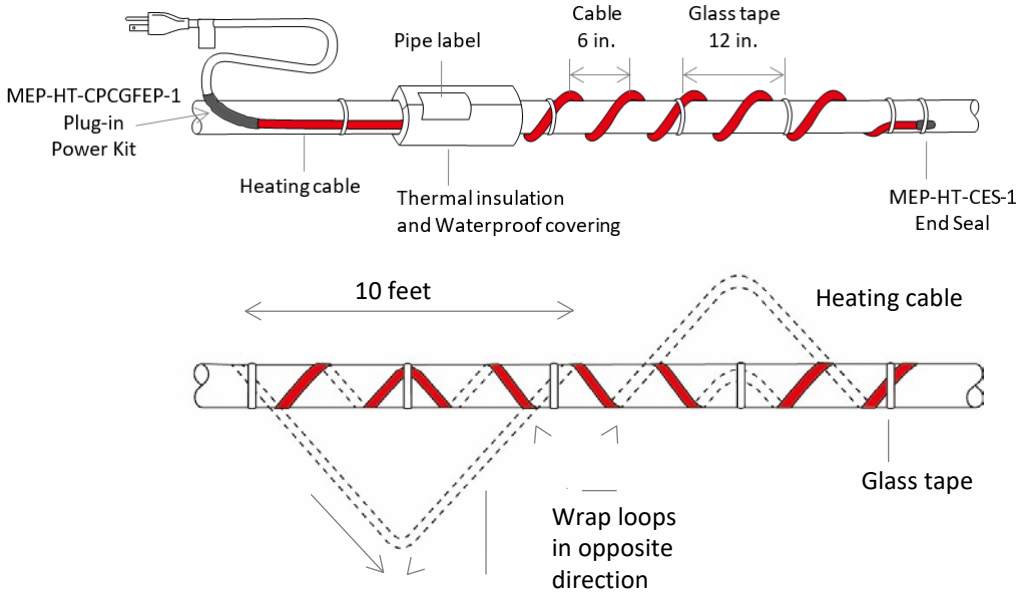

3.7 System Accessories: Connection kits

A complete (BK-)LSRX/CRGX heating cable system typically include a power connection and an end seal. Tee or Splice connections are used if necessary. Installation instructions are included in each connection kit. Steps for preparing and connecting to connection kits must be followed to ensure safety.

Connection Kits Installation Requirements

- The conductive layer of this heating device must be connected to a suitable grounding/earthing terminal.
- Be sure to leave a service loop at all components for future maintenance, except when temperature sensitive fluids are involved or when the pipe is smaller than 1 inch.
- Heating cables must be installed over, not under, pipe straps used to secure pipe mounted metal bracket.
- Keep components and heating cable ends dry before and during installation
- Do not damage or break braid and bus wire strands when scoring the jacket or core as damaged bus wires can overheat or short.
- Heat-damaged components can short. Use a heat gun to shrink the tubes. Keep the heat gun moving from side to side even after tube has shrunk to melt adhesive inside tube. A small amount of adhesive should ooze out around the heat shrink tubing.
- Avoid overheating, blistering, or charring the heat-shrinkable tubes as they will produce fumes that may cause eye, skin, nose, and throat irritation.
- Avoid heating other components. Replace any damaged parts.
- Leave these installation instructions with the user for future reference.

3.8 Install Thermal Insulation

Before installing insulation

- Before installing thermal insulation, be sure the heating cable is free of mechanical damage from cuts, clamps, etc., as well as thermal damage from solder, overheating, etc.
- Visually inspect the heating cable and components for correct installation and damage. Damaged cable must be replaced.
- Perform IR testing (refer to Section 1.3), prior to covering the pipe with thermal insulation.

Thermal insulation installation

- Properly installed and well-maintained thermal insulation is critical to the performance of the trace heating system. Without proper insulation, heat losses are generally too high to be offset by a conventional heat tracing system.
- Properly insulate all heat sinks, including pipe supports, hangers, flanges, and in most cases, valve bonnets.
- Install a protective vapor barrier over the insulation, regardless of the type or thickness of insulation used. The vapor barrier protects the insulation from moisture intrusion and physical damage and ensures the proper performance of the trace heating system.
- Seal all penetrations around the vapor barrier.
- Install the insulation on the piping as soon as possible to minimize the potential for mechanical damage after installation.
- Make sure that at least 1/2" of preformed foam or equivalent thermal insulation is used.

After Installing Thermal Insulation

- The presence of trace heaters shall be made evident by posting of caution signs or markings at appropriate locations and/or at frequent intervals along the circuit.
- Apply the provided peel-and-stick Warning labels along the pipe, on the outermost surface of the thermal insulation or vapor barrier, at intervals of 3m or less, as shown in Figure 3.
- Apply the caution labels at any other appropriate locations, such as valves.
- Perform IR testing (refer to Section 1.3), prior to covering the pipe with thermal insulation.

Figure 3. Thermal insulation, label and Strain relief

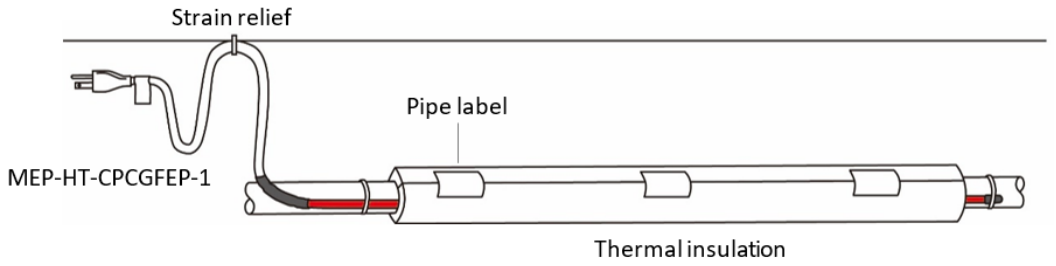

- This figure shows partially insulated pipe to visually show how integral components of power splice and end seal are installed. You must fully insulate with vapor barrier for your application.

3.9 Finishing the Installation

Voltage Rating

- Verify that the source voltage corresponds to the heating cable rating printed on the cable jacket and specified by the design.

Electrical Loading

- Overcurrent devices are selected according to the heating cable type, source voltage, and circuit length to allow start-up at the designed ambient temperatures. The design specifies the size and type of overcurrent device.

Ground-Fault Protection

- For typical installations (with TT and TN grounding systems), the means of protection must include a residual current protective device for each branch circuit.
- For fixed-level earth/ground-fault circuit interrupters, a minimum 30 mA trip level is recommended. The preferred trip level for adjustable devices is 30 mA above any inherent capacitive leakage characteristic of the heater, as specified by BERKO Engineering.
- WARNING: To minimize the danger of fire from sustained electrical arcing if the heating cable is damaged or improperly installed, and to comply with BERKO requirements, agency certifications, and national electrical codes, ground-fault equipment protection must be used on each heating cable branch circuit. Arcing may not be stopped by conventional circuit breakers.
- To prevent damage to the heating cable or cord, secure the cold lead of power cord with a plastic cable tie, glass cloth tape, or duct tape as shown in Figure 3.
- Two labels indicating the presence of electric heating cable are included with the heating cable. Attach the two "Electric Traced" labels on the outer surface of the pipe insulation at suitable intervals to indicate the presence of electric heating cable.

3.10 Recommended Inspection

Visual inspection

- Check that heating cable is affixed to all necessary pipes.
- No mechanical damage to heating cable is present such as cuts, cracks, clamps, etc.
- Proper installation of the system is complete.
- Visually inspect the pipe, insulation, and connections to the heating cable for physical damage.
- Visually inspect for damage to ensure fault-free installation of the accessories.
- Damaged heating cable must be replaced.
- Check that no moisture is present, electrical connections are tight and grounded, insulation is dry and sealed, and control and monitoring systems are operational and properly set (if applicable).
- Check for damaged or wet thermal insulation; damaged, missing or cracked lagging and weather-proofing.

- No thermal damage
- Proper connection of all components including power supplies.
- Insulation resistance measurements to check for damage to extruded jackets
- Standing water in the pipe should feel warm within an hour.

4 Operation and Maintenance

4.1 Tests and operation

Insulation Resistance

Progressive tests on the trace heating system during installation and operation serve to avoid additional costs through not recognizing installation and assembly faults early enough. Since the installation costs for the trace heating system and thermal insulation exceed the costs for the heating cable to a considerable extent, the following test sections should be strictly observed.

Measurement of the insulation resistance is carried out at the following times:

- Preliminary test: Shortly before beginning installation of the heating cable on the construction site
- Acceptance test: Following complete installation of the heating circuit or fitting of the thermal insulation
- Final inspection: Immediately after completion of work on the thermal insulation and connection kits
- Commissioning: Before switching on the installation
- Maintenance: As part of the regular system inspection and after any maintenance or repair work

*Refer to 1.3 IR Test procedure for proper measurements

Acceptance and Test report

- After completion of the installation work (before fitting the thermal insulation) each heating circuit must be accepted, if possible, in the presence of the client.
- All tests going beyond this must also be documented in an acceptance test report.
- After completion of work on the thermal insulation final inspection and acceptance of the individual heating circuits is recommended. As a rule, carrying this out is incumbent on the client or the final customer (= final inspection).

Putting into operation

Each trace heating system can be put into operation only if

- the acceptance test reports for each heating circuit are available and the perfect state of the trace heating system has been confirmed,
- the thermal insulation has been completely installed and is in a dry condition
- it has been ensured that the heating circuit is operated within the data specified by Berko.

Note

- Additional heating power, which is required for heating up empty or already filled tanks/pipes, is normally not taken into consideration in the project planning. Therefore, cold starting of the system, you should allow sufficient time so that the pipe can reach the required temperature.

Part 3: DE-ICING AND SNOW MELTING SYSTEM DESIGN AND INSTALLATION

1. Before installation

1.1 Warnings

- Time scheduling of installation of the (BK-)LSRX/CRGX heating cable system must be coordinated with other installation work, particularly with work on the roof, gutter and downspout, and electrical installation.
- Install only in accessible locations; do not install behind walls or where the cable would be hidden or where it might be warmed by sources of heat, such as an exhaust vent or chimney.
- Do not run the heating cable through walls, ceilings, or floors.
- Do not install the heating cable underneath any roof covering for roof and gutter de-icing.
- Route and secure cable to avoid possible mechanical damage, such as from ladders, etc.
- When possible, all power connection boxes should be located in a protected area (such as under eaves) and entry should be at the bottom of the box. In all cases, a drip loop should be provided.
- Route and secure cable to avoid possible mechanical damage, such as from ladders, etc.
- Connect only to ground-fault protected outlets that have been installed in accordance with all prevailing national/local codes and standards and are protected from rain and other water.
- The presence of the heating devices shall be made evident by the posting of caution signs or markings where clearly visible.

1.2 IR Test

The insulation resistance (IR) test establishes the electrical integrity of the trace heater. For the flexible trace heaters covered in this document, the IR test should be performed with a megger capable of delivering a voltage of at least 500 Vdc.

- If not done already, prepare the conductors of the trace heater according to the instructions accompanying the power and end termination kit(s) provided with the system.
- Connect the megger's positive lead to the cable bus wires, shorted together.
- Connect the megger's negative lead to the metallic braid.
- Set the megger test voltage to 500 Vdc.
- Energize the megger for 60 seconds.
- Readings of at least 20 MΩ are acceptable.

Readings below 20 MΩ usually indicate that the electrical insulation of the trace heater has been compromised. Check the trace heater for signs of physical damage between the braid and the heating element. Small cuts or scuff marks on the outer jacket will not affect the megger reading unless there is penetration through the braid and dielectric insulation jacket.

1.3 General Installation Guidelines

- (BK-)LSRX/CRGX heating cable is designed to remove melt water, not accumulated snow.
- (BK-)LSRX/CRGX heating cable will not keep snow or ice from falling off the roof.
- (BK-)LSRX/CRGX heating cable may be used on:
- Gutters and Downspouts made from standard materials, including metal and plastic,
- Roofs made from all types of standard roofing materials, including shake, shingle, rubber, tar, wood, metal, and plastic.
- All actual lengths installed should be recorded. The manufacturer or installer should provide as built drawings and data.
- For the installation of this heating system use only listed components (wire, connectors, etc.) that have suitable ratings for the application.
- This heating system must be installed per ANSI/NFPA 70, National Electrical Code (NEC) and CAN/CSA-C22.1, Canadian Electrical Code, Part1(CEC).
- If/For the non-heating leads may be shortened, the markings must be retained.
- All penetrations made on the surface of any style of roof should be moisture proofed by using a suitable sealant or sealing type fasteners. The installation of any heating system should not affect the overall integrity of the roof or gutter.
- Per the National Electrical Code (NEC), Clause 426.90 B, cord and plug construction products are limited to 20 A circuit breaker maximum. Make sure your branch circuit is limited to a maximum 20 A for MEP-HT-CPCGFEP-1, and a maximum 30 A for MEP-HT-CPCG-1.

2. Model, Usages and Rating

Model	UL Category	Designation	Rated Output	Voltages	Usage	Location
(BK-)LSRX/CRGX	KOBQ KOBQ7	Commercial and Residential Roof & Gutter De-icing and Snow-melting Equipment	Up to 10W/ft	120V 208V 240V 277V	(-WS) With wet test and weather resistance	Ordinary location

2.1 Maximum cable circuit length according to circuit breaker selection

Catalog Number	Start-Up Temperature °F (°C)	Maximum Circuit Length per Circuit Breaker, **feet** **120V** 15A	20A	30A	40A	**240V** 15A	20A	30A	40A
(BK-)LSRX05/CRGX05	32 (0) ice	166	222	302	302	333	444	604	604
	0 (-18) ice	126	168	252	302	252	336	504	604
(BK-)LSRX08/CRGX08	32 (0) ice	131	175	243	243	262	350	482	482
	0 (-18) ice	104	138	207	243	207	276	415	482
(BK-)LSRX10/CRGX10	32 (0) ice	110	146	207	207	220	293	410	410
	0 (-18) ice	90	120	179	207	179	239	359	410

* MEP-HT-CPCGFEP-1 plug-in power connection kit with equipment ground fault protection device is limited to 15A circuit breaker maximum and therefore shall not exceed maximum circuit length values given under 15A circuit breaker size in the chart above.

2.1 Circuit length adjustment factor

Voltage	(BK-)LSRX05/CRGX05	(BK-)LSRX08/CRGX08 -2	(BK-)LSRX10/CRGX10 -2
208V	0.944	0.922	0.902
240V	1.000	1.000	1.000
277V	1.064	1.097	1.098

2.2 Power adjustment factor

Voltage	(BK-)LSRX05/CRGX05-2	(BK-)LSRX08/CRGX08-2	(BK-)LSRX10/CRGX10-2
208V	0.820	0.880	0.910
240V	1.000	1.000	1.000
277V	1.170	1.120	1.100

2.3 Lead wire

Size of Lead wire per NEC/CEC
16 AWG (1.5sq.mm) for less than 2,000W
14 AWG (2.5 sq.mm) for more than 2,000W

3. Heating Cable Installation

3.1 Additional Items required but not supplied for pipe applications

- Ground-fault protected outlet (GFCI) unless supplied within power connection kit
- UV resistant cable ties
- Roof clips
- Downspout hangers

3.2 Setting and pulling cable

- Use a stable holding device for unwinding the heating cable from the coil.
- Remove the heating cable in a straight line from the coil.
- Do not bend or pinch the heating cable, or pull it over sharp edges.
- Do not tread on or drive over the heating cable; do not use it as a loop for stepping on.
- The ends of the heating cable are always fitted with a protective cap.

3.3 Determine (BK-)LSRX/CRGX Heating Cable for Roof & Gutter De-icing

Find the multiplier for heating cable needed per foot of roof edge in Table 1 and calculate the amount of total heating cable length you need using below formula. Refer to Table 2 for appropriate width and heights when tracing your roof with different overhang size and roof style.

Table 1.
Typical spacing & layout measurements
Multiplier per foot of roof edge

Eave overhang (in)	Roof edge multiplier		
	Shingle	Stand. seam metal	
		18 in	24 in
None	2.0	2.5	2.0
12	2.8	2.8	2.4
24	3.8	3.6	2.9
36	4.8	4.3	3.6

Table 2.
Tracing heights for Shake and Shingle Roof

Roof of overhang (in)	Tracing width (ft)	heights (in)	Feet of cable per foot roof edge
None*	2	18	2.0
12	2	18	2.8
24	2	30	3.8
36	2	42	4.8

Tracing heights for Standing Seam Metal Roof**

Eave overhang (in)	Standing Seam Spacing (in)	Tracing heights (in)	Feet of cable per foot roof edge
None*	18	18	2.5
12	18	24	2.8
24	18	36	3.6
36	18	48	4.3
None*	24	18	2.0
12	24	24	2.4
24	24	36	2.9
36	24	48	3.6

Total length (ft) = A + B + C + D

A Roof edge: Roof edge (ft) x roof edge multiplier (Table 1)
B Roof Extension*: Roof edge (ft) x 0.5
C Roof gutter: Total gutter length (ft)
D Downspout: Total downspout length (ft) +1 ft

* Roof extension length allows the heating cable to extend into the gutter to provide a continuous drain path, or where no gutters are present, extends beyond the roof edge to form a drip loop.

For example;

Roof:	shingle
Roof edge:	18 ft
Roof gutter:	18 ft
Downspout:	15 ft
Eave overhang:	1 ft (12 in)

Heating cable required:

A Roof edge:	18 ft x 2.8= 50.4 ft
B Roof extension:	18 ft x 0.5= 9.0ft
C Roof gutter:	18 ft = 18.0 ft
D Downspout:	15 ft + 1 ft= 16.0 ft

Total length required: = 93.4 ft

* Gutter required
** No additional heating cable is required for gutters when tracing standing seam metal roofs

If a total length exceeds the maximum Circuit Length based on maximum Circuit Current as shown in (BK-)LSRX/CRGX Datasheet, separate circuits are required.

3.4 Prepare for installation

- The heating cable and components have to be stored in a dry place at an ambient temperature between -30 and +60 ºC (-22ºF and 140 ºF).
- Do not store the materials in areas with a lot of traffic where potential damages may occur.
- Make certain gutters and downspouts are cleared of any debris and other leaves.
- Carefully plan the routing of the heating cable for roof and gutter de-icing.
- Protect the heating cable ends from moisture and mechanical damage if they will be exposed before connection.

3.5 Choose a starting point

The cable starting point must not be near any entrance areas, sidewalks, etc. to avoid contact by persons or equipment, such as yard tools, that can move or damage the cable, and may also be to avoid having the cable power cord routed in front of windows or high-visibility areas of home. If an electrical outlet already exists in an appropriate location near the eave, then that defines the cable starting point. Otherwise, select an appropriate starting point and have an electrical outlet installed.

3.6 Position and attach the heating cable on roofs

- Loop the heating cable on the overhang area of the roof. This is the part that extends past the building wall. Extend the bottom of each heating cable loop over the roof edge and, using a UV-resistant cable tie, connect the bottom of each loop to the cable running in the gutter to ensure a drainage channel off the roof and into the gutter and downspout. The cable running in the gutter should remain against the bottom of the gutter as shown in Figures 4 and 5.

Figure 4. Standard roof

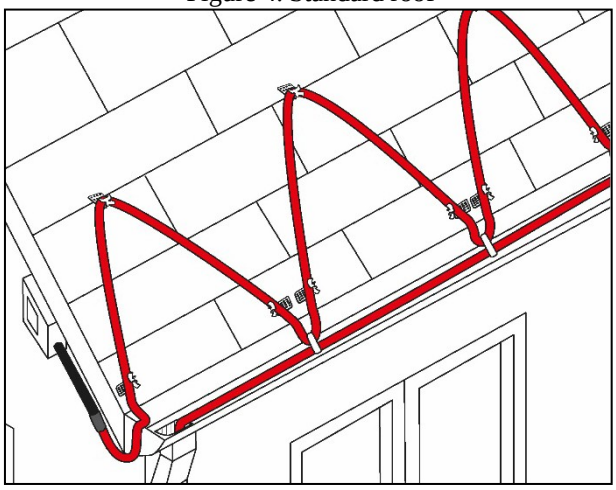

Figure 5. Standing seam metal roof

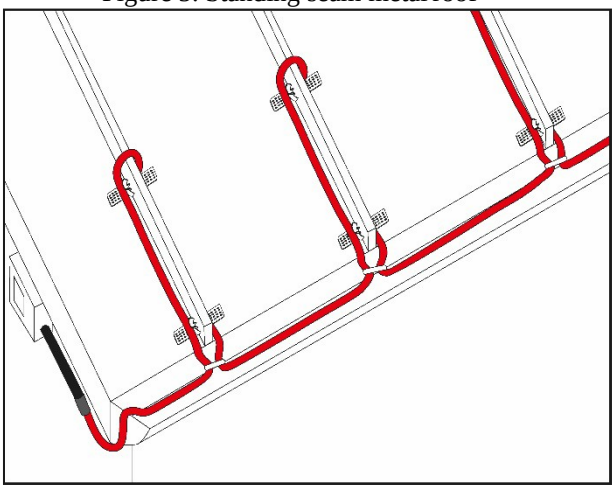

- Extend the top of each heating cable loop beyond where the wall joins the roof.
- Use roof clips to route heating cable into and out of the gutter in such a way as to prevent abrasion to the cable. Protect all cable that protrudes past the lower opening of the downspout. Use about 10 roof clips for 7 linear feet of roof edge and about 50 roof clips for 35 feet.
- Roof clips may be attached to a shake or shingle roof with nails or screws as in Figure 4, and be attached to a metal roof using screw, nail or adhesive as shown in Figure 5. Reseal the nail or screw holes, if necessary, before installing heating cable in the clips.
- Trace two-thirds of the way up each valley with a double run of heating cable as in Figure 6.
- Construction of an ice/snow fence above the tracing system is desirable to prevent damage from ice or snow slides. This prevents damage to the heating cable and keeps the installation from coming loose. The heating cable can be attached to the barrier with UV-resistant cable ties, instead of using roof clips, if desired. Do not use wire or other materials.

Figure 6. Valley

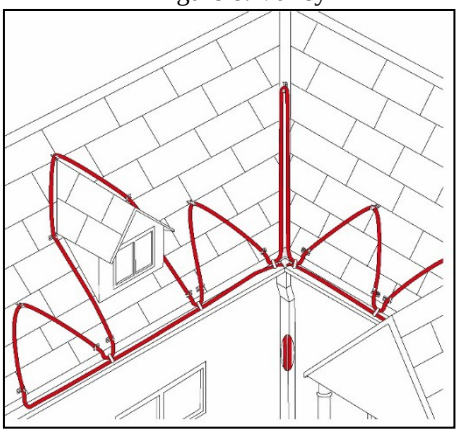

Figure 7. Downspout Hanger

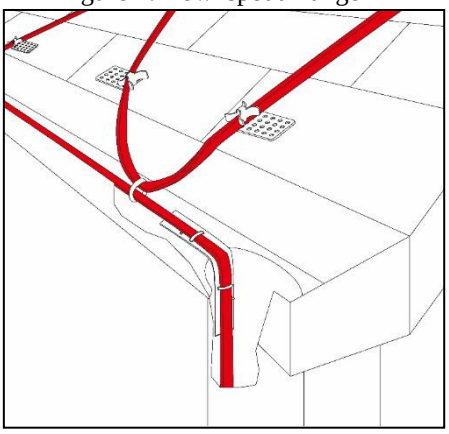

Figure 8. Downspout

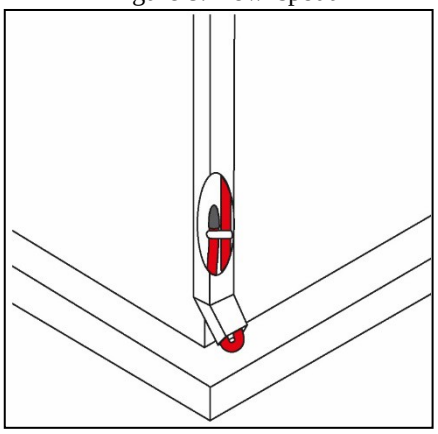

3.7 Installation in gutters and downspouts

- Use downspout hangers at the gutter/downspout transition to protect the heating cable from fraying and from damage from sharp edges and to provide strain relief as in Figure 7.
- Run heating cable along gutters and into downspouts, ending below the freezing level. Permanent attachment of the cable to the gutter bottom is not necessary.
- Loop the heating cable in downspouts. Do not leave the end of the heating cable in air at the end of the downspout. Protect all cable that protrudes past the lower opening of the downspout as shown in Figure 8.
- If downspout is in the middle of the run, loop the heating cable down and back up. Double the length of the downspout for determining the length of the heating cable to install.
- For gutters 5-6 inches wide use 2 runs of heating cable.
- For gutters wider than 6 inches consult an expert.
- The mounting hardware should be made of corrosion resistant material and should not have sharp edges or burrs that could damage the heater cable.

3.8 System Accessories: Connection kits

A complete (BK-)LSRX/CRGX heating cable system typically include a power connection and an end seal. Tee or Splice connections are used if necessary. Installation instructions are included in each connection kit. Steps for preparing and connecting to connection kits must be followed to ensure safety.

BERKO Connection Kits Installation Requirements

- The conductive layer of this heating device must be connected to a suitable grounding/earthing terminal.
- Be sure to leave a service loop at all components for future maintenance, except when temperature sensitive fluids are involved or when the pipe is smaller than 1 inch.
- Heating cables must be installed over, not under, pipe straps used to secure pipe mounted metal bracket.
- Keep components and heating cable ends dry before and during installation
- Do not damage or break braid and bus wire strands when scoring the jacket or core as damaged bus wires can overheat or short.
- Heat-damaged components can short. Use a heat gun to shrink the tubes. Keep the heat gun moving from side to side even after tube has shrunk to melt adhesive inside tube. A small amount of adhesive should ooze out around the heat shrink tubing.
- Avoid overheating, blistering, or charring the heat-shrinkable tubes as they will produce fumes that may cause eye, skin, nose and throat irritation.
- Avoid heating other components. Replace any damaged parts.
- Leave these installation instructions with the user for future reference.

3.9 Finishing the installation

Voltage Rating

- Verify that the source voltage corresponds to the heating cable rating printed on the cable jacket and specified by the design.

Electrical Loading

- Overcurrent devices are selected according to the heating cable type, source voltage, and circuit length to allow start-up at the designed ambient temperatures. The design specifies the size and type of overcurrent device.

Ground-Fault Protection

- Ground fault equipment protection is required for each circuit.
- For typical installations (with TT and TN grounding systems), the means of protection must include a residual current protective device for each branch circuit.
- For fixed-level earth/ground-fault circuit interrupters, a minimum 30 mA trip level is recommended. The preferred trip level for adjustable devices is 30 mA above any inherent capacitive leakage characteristic of the heater, as specified by BERKO Engineering.
- WARNING: To minimize the danger of fire from sustained electrical arcing if the heating cable is damaged or improperly installed, and to comply with BERKO requirements, agency certifications, and national electrical codes, ground-fault equipment protection must be used on each heating cable branch circuit. Arcing may not be stopped by conventional circuit breakers.
- To prevent damage to the heating cable or cord, secure the cold lead of power cord with a plastic cable tie, glass cloth tape, or duct tape as shown in Figure 3.

- Two copies of a caution notice indicating the presence of electric de-icing and snow-melting equipment on the premises are packed with this unit. One notice must be posted at the fuse or circuit-breaker panel and the other on or next to the on/off control for the cable unit. Both notices must be clearly visible.
- Make certain the gutters and downspouts are free of leaves and other debris prior to winter season.

3.10 Recommended Inspection

Visual inspection

- Check that heating cable is affixed to all necessary pipes.
- No mechanical damage to heating cable is present such as cuts, cracks, clamps, etc.
- Proper installation of the system is complete.
- Visually inspect the pipe, insulation, and connections to the heating cable for physical damage.
- Visually inspect for damage to ensure fault-free installation of the accessories.
- Damaged heating cable must be replaced.
- Check that no moisture is present, electrical connections are tight and grounded, insulation is dry and sealed, and control and monitoring systems are operational and properly set (if applicable).
- Check for damaged or wet thermal insulation; damaged, missing or cracked lagging and weather-proofing.
- No thermal damage
- Proper connection of all components including power supplies.
- Insulation resistance measurements to check for damage to extruded jackets
- Standing water in the pipe should feel warm within an hour.

4. Operation and Maintenance

4.1 Tests and operation

Insulation Resistance

Progressive tests on the trace heating system during installation and operation serve to avoid additional costs through not recognizing installation and assembly faults early enough, so the following test sections should be strictly observed.

Measurement of the insulation resistance is carried out at the following times:

- Preliminary test: Shortly before beginning installation of the heating cable on the construction site
- Acceptance test: Following complete installation of the heating circuit
- Final inspection: Immediately after completion of work on the connection kits installation
- Commissioning: Before switching on the installation
- Maintenance: As part of the regular system inspection and after any maintenance or repair work

*Refer to 1.2 IR Test procedure for proper measurements

Acceptance and Test report

- After completion of the installation work each heating circuit must be accepted, if possible, in the presence of the client.
- All tests going beyond this must also be documented in an acceptance test report.
- After completion of work on the Berko connection kits final inspection and acceptance of the individual heating circuits is recommended. As a rule, carrying this out is incumbent on the client or the final customer (= final inspection).

Putting into operation

Each trace heating system can be put into operation only if

- the acceptance test reports for each heating circuit are available and the perfect state of the trace heating system has been confirmed,
- it has been ensured that the heating circuit is operated within the data specified by Berko.

Part 3-1: Roof Clip Installation Instructions

Roof Sealant (or adhesive)

- Adhesive (roof sealant) is not supplied by Berko and shall be supplied by buyer or installer.
- Do not use adhesives on tile or slate roofs. Check with roofing manufacturer for an appropriate adhesive for your roof type.

- Methacrylate Adhesive or Neutral-cure Silicone Adhesive are recommended especially for metal roofs.
- Make sure curing time is allowed before mounting heating cables onto roof clips.

Roof Clips for (BK-)LSRX/CRGX heating cables

• Shake roof

1. Determine heating cable layout and clip placement.

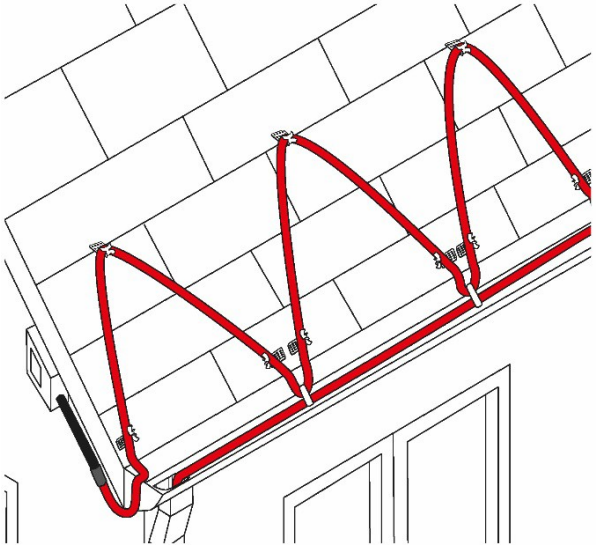

2. Apply proper sealant for roofing materials used to the back side of the roofing clip as shown.

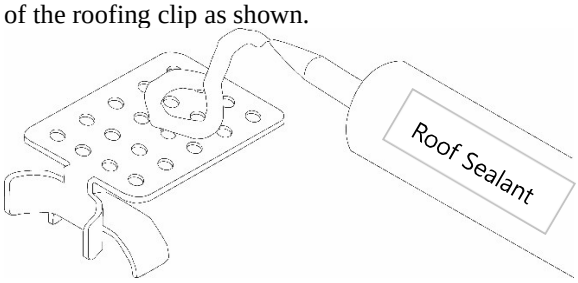

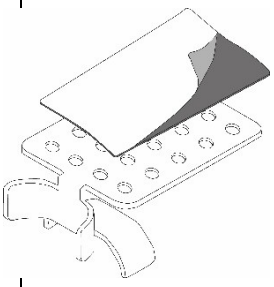

Roof sealant(adhesive) for all roof types (above)

or

Double sided acrylic foam pads on the back of the clip for metal roofs ONLY (left)

3. Place under the shake as shown and fasten with nails or screws. Apply adhesive to the top of the clip before placing the back down.

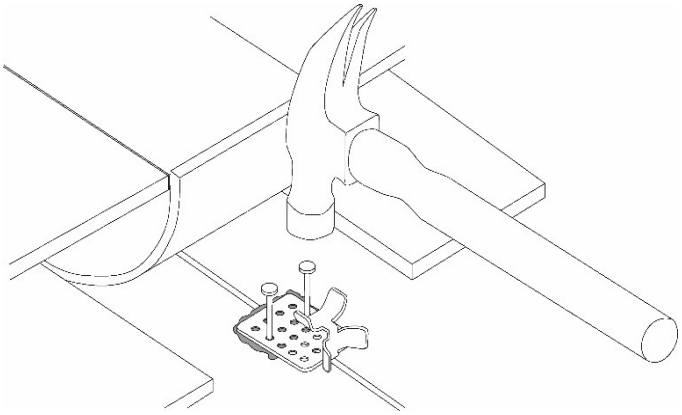

4. Install heating cable and use pliers to close the clamp. Do not crush the heating cable.

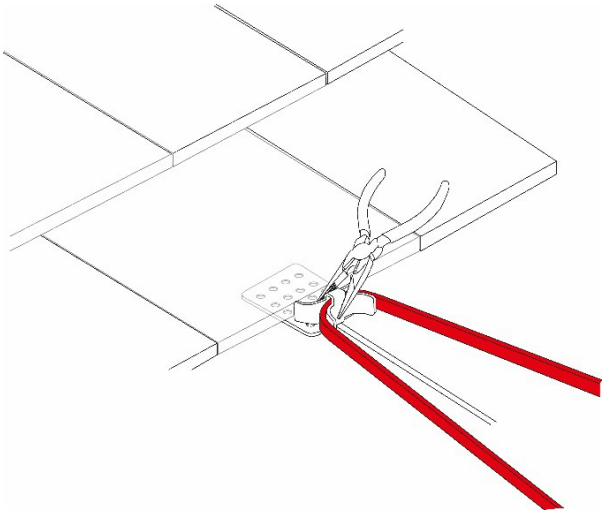

• Metal roof

1. Determine heating cable layout and clip placement. 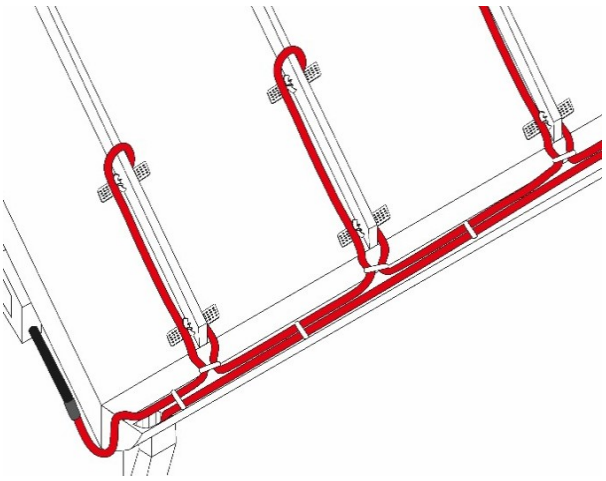	2. Clean and prepare roof surface per adhesive manufacturer's specifications. 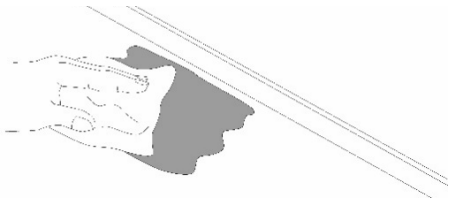 3. Apply adhesive or double-sided acrylic foam pads on the back of the clip (for metal roofs ONLY). 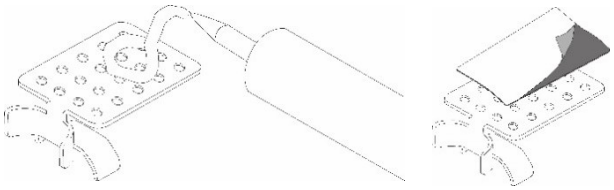
4. Place clip on the prepared surface and press down until the adhesive flows through the holes. Do not trim adhesive as the access flow helps hold the clip 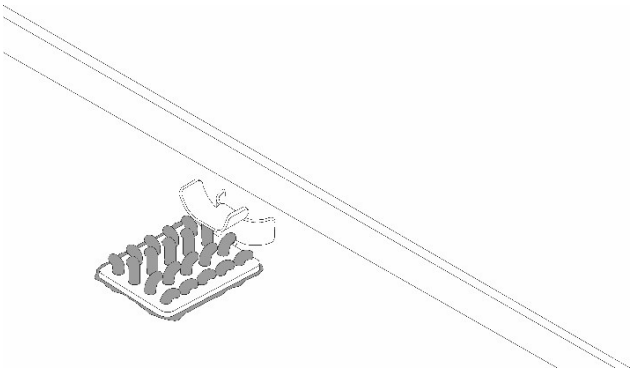	5. Allow adhesive to cure per manufacturer's specifications, then install heating cable and use pliers to close the clamp. Do not crush the heating cable 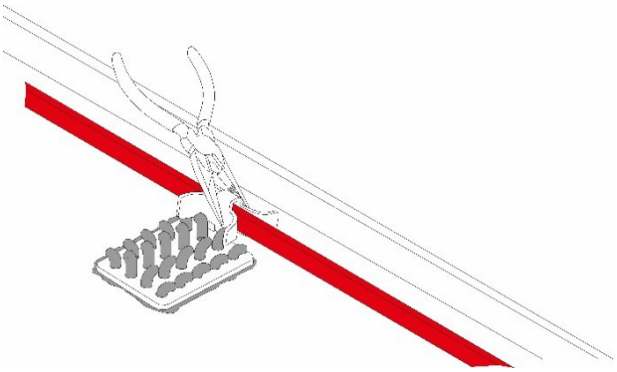

3-2: Downspout Hanger Installation Instructions

Downspout Hangers for (BK-)LSRX/CRGX heating cables

• Installation

1. Bend hanger to 90 degrees as shown. Insert cable ties through holes on the hanger and around the cable. 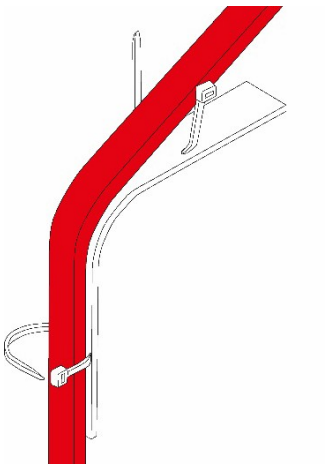	2. Position the hanger and tighten the cable ties. Cut off the excess cable tie. 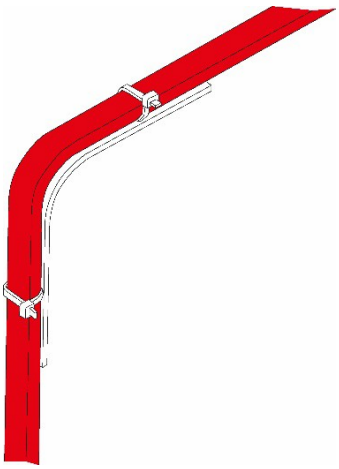

• Applications

3. The hanger should be centered on the edge of the downspout to prevent mechanical damage and to support the heating cable. 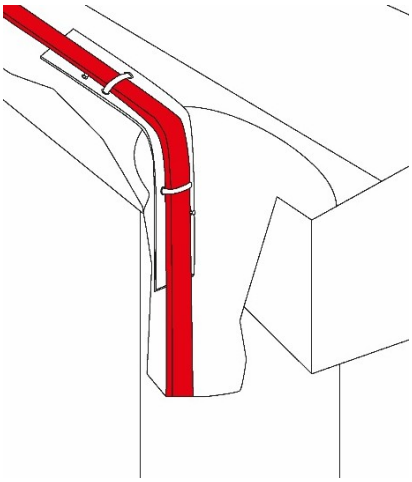	4. Use the hanger to protect the heating cable from sharp edges such as when mounting at the end of gutter or other areas that could damage the cable. 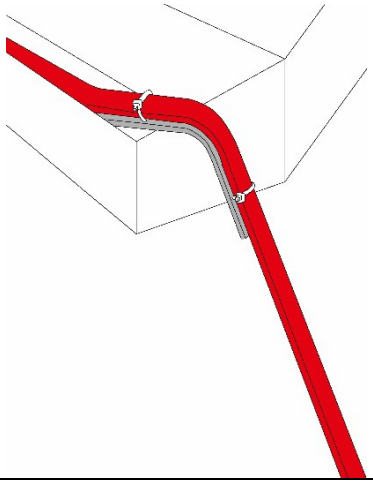

Part 4: Troubleshooting

This troubleshooting guide aims to help to diagnose and resolve many issues on-site.

Many problems with electric trace heating systems can be attributed to two causes:

- Wet, damaged, or missing insulation. Visually inspect the insulation along the entire length of the circuit, making sure that it is intact and dry throughout.
- Physical damage incurred from recent repairs and maintenance to any in-line or nearby equipment.

Potential Failure Mode	Probable causes	Action to take
Circuit breaker is tripped	1 Circuit breaker size is undersized.	- Check the design for start-up temperature and maximum circuit length allowed for the size of the circuit breaker used. Use proper power wire size to be compatible with circuit breaker. Make sure the length of the heating cable used does not exceed maximum circuit length, or replace the circuit breaker to allow longer circuit length. Check for defective parts or improper installations.
	2 Circuit is energized at too low temperatures.	
	3 Circuit length is longer than the design.	
	4 Damaged heating cable is causing short.	- Check insulation and heating cable for any physical damages and replace them.
	5 Short circuit/earth fault	- Check connections (power, splice/tee, end) for improper installations or any signs of moisture. Replace or reinstall as necessary and retest insulation resistance. Rework on end seals per installation instruction if bus wires are connected together at the end termination. Check remaining circuit for permanent damages. Watch out for a dead short as the heating cable may have been damaged due to excessive current. Replacement with new heating cables will be necessary.

Potential Failure Mode	Probable causes	Action to take
No or low power output	1 No or low supply voltage	- Check power supply lines and restore power to heating cable circuit.
	2 The circuit is shorter than specified in the design due to below reasons; - Splices or tees are not connected. - Heating cable is damaged or disconnected.	- Check and make sure the heating cable routing and length are as planned in the original design. - Connect splices or tees and recheck power output. - Find damaged section or disconnected connections of the heating cable circuit and fix them. Then, recheck the power output.
	3 High resistance connection due to bad connection.	- Locate faulty or loose connections. Reinstall and ensure connecting or crimping are correct.
	4 Pipe temperature exceeded than specified in the design.	- Check pipe temperature. Compare the power output of the heating cable in the design to the actual power output. Makes sure heating cable selection is correct.
	5 Heating cable is exposed to moisture or excessive temperature.	- Dry out moisture. Replace damaged section of heating cable, connections and end termination. Then recheck the power output. - Check the pipe temperature and verify the heating cable selection. In case of wrong selection, replace the heating cables.
Pipe temperature is low	1 Wet, damaged or missing insulation	- Replace with dry insulation and ensure weatherproof sealing.
	2 Insufficient heat tracing on valves, flanges and other heat sinks.	- Install additional heating cable with splice connections but make sure maximum circuit length is not exceeded.
	3 Improper thermal design	- Consult with your BERKO representative to verify the design and modify per recommendations.
	4 Thermostat setting is incorrect.	- Reset the thermostat.
Pipe temperature is high	1 Thermostat/controller failed.	- Replace sensor or thermostat/controller.
	2 Thermostat/controller continues to be on.	- Reset the setpoint.
	3 Sensor is improperly located.	- Avoid heat sinks and install on a pipe with proper insulation.
Low insulation resistance	1 Damaged heating cable or connections	- Find and replace damaged section of heating cable. Do not try to repair a damaged heating cable. Check connections for any damages or improper connections. If there is any moisture found, dry out and retest. If the heating cable is exposed to water, replace the heating cable.