Save This Manual
For Future Reference

SEARS

owners
manual

MODEL NO.
113.179430

8-GALLON
WET/DRY VAC

Serial
Number _____
Model and serial numbers may be found on the motor cover.
You should record both model and serial number in a safe place for future use.

CAUTION:
READ ALL
INSTRUCTIONS
CAREFULLY

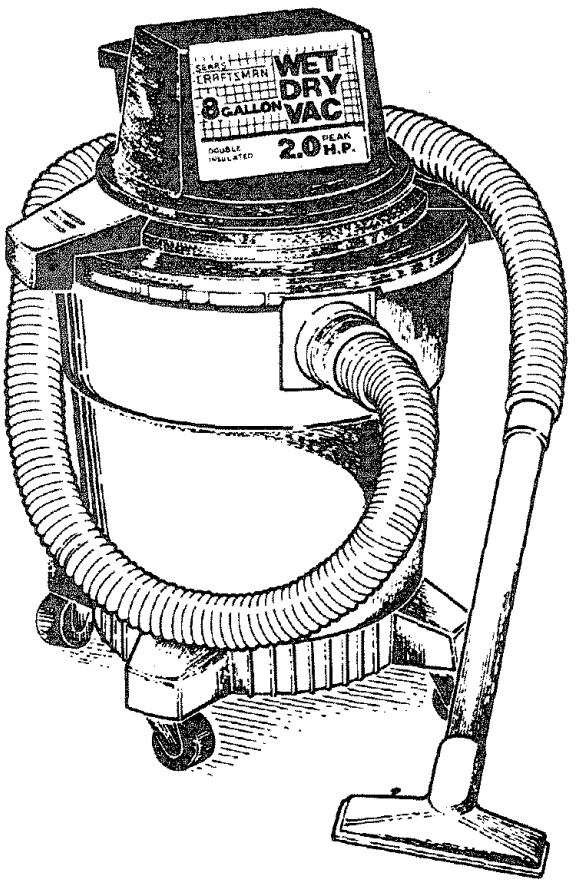

SEARS / CRAFTSMAN®

8-GALLON DOUBLE INSULATED WET/DRY VAC

- assembly
- operating
- repair parts

Sold by SEARS, ROEBUCK AND CO., Chicago, IL 60684 U.S.A.

Part No. SP5241

Printed in U.S.A.

FULL ONE YEAR WARRANTY ON CRAFTSMAN WET-DRY VACS

If within one year from the date of purchase, this Craftsman Wet-Dry Vac fails due to a defect in material or workmanship, Sears will repair it, free of charge.

WARRANTY SERVICE IS AVAILABLE BY SIMPLY CONTACTING THE NEAREST SEARS SERVICE CENTER/DEPARTMENT THROUGHOUT THE UNITED STATES.

This warranty applies only while this product is used in the United States.

This warranty gives you specific legal rights, and you may also have other rights which vary from state to state.

SEARS, ROEBUCK AND CO., Dept. 698/731A, Sears Tower, Chicago, IL 60684

IMPORTANT SAFETY INSTRUCTIONS

When using your Wet/Dry Vac, follow basic safety precautions including the following.

WARNING – To reduce the risk of fire, electric shock, or injury:

Read and understand this owner's manual and all labels on the Wet/Dry Vac before operating. Use only as described in this manual. To avoid personal injury or damage to Wet/Dry Vac, use only Sears Craftsman recommended accessories.

Sparks inside the motor can ignite flammable vapors or dust. To avoid fire or explosion:

- Do not vacuum, or use this Wet/Dry Vac near, flammable or combustible liquids, gases, or explosive dusts like gasoline or other fuels, lighter fluid, cleaners, oil-based paints, natural gas, hydrogen, coal dust, magnesium dust, grain dust, or gun powder.
- Do not use Wet/Dry Vac as a sprayer for any flammable or combustible liquid.

Do not vacuum anything that is burning or smoking, such as cigarettes, matches, or hot ashes.

To avoid health hazards from vapors or dusts, do not vacuum toxic materials.

Do not use or store near hazardous materials.

To avoid electric shock, do not expose to rain. Store indoors.

Do not allow to be used as a toy. Close attention is necessary when used by or near children.

Do not use this Wet/Dry Vac with a torn filter or without the filter installed except for vacuuming liquids as described in the operations section of this manual.

Do not leave Wet/Dry Vac when plugged in. Unplug from outlet when not in use and before servicing. Turn off Wet/Dry Vac before unplugging.

To avoid injury from accidental starting, unplug power cord before changing or cleaning filter.

Do not unplug by pulling on cord. To unplug, grasp the plug, not the cord.

Do not use with damaged cord, plug or other parts. If your Wet/Dry Vac is not working as it should, has missing parts, has been dropped, damaged, left outdoors, or dropped into water, return it to a Sears Service Center.

Do not pull or carry by cord, use cord as handle, close a door on cord, or pull cord around sharp edges or corners. Do not run Wet/Dry Vac over cord. Keep cord away from heated surfaces.

Do not handle plug or the Wet/Dry Vac with wet hands.

Do not put any object into ventilation openings. Do not vacuum with any ventilation openings blocked; keep free of dust, lint, hair or anything that may reduce air flow.

Keep hair, loose clothing, fingers, and all parts of body away from openings and moving parts.

To avoid falls, use extra care when cleaning on stairs.

This Wet/Dry Vac is double-insulated, eliminating the need for a separate grounding system. Use only identical replacement parts. Read the instructions for Servicing Double-Insulated Wet/Dry Vacs before servicing.

Extension cords in poor condition or that are too small can pose fire and shock hazards. When using an extension cord, be sure it is in good condition. Using any extension cord will cause some loss of power. To keep the loss to a minimum, use the table below to choose the minimum wire size extension cord.

Extension Cord Length	Wire Size
• 0-50 feet	No. 14
• 50-100 feet	No. 12

Observe the following warnings that appear on the motor housing of your Wet/Dry Vac.



DOUBLE INSULATED. GROUNDING NOT REQUIRED. WHEN SERVICING USE ONLY IDENTICAL REPLACEMENT PARTS

WARNING: TO AVOID ELECTRIC SHOCK—DO NOT EXPOSE TO RAIN—STORE INDOORS

WARNING: FOR YOUR OWN SAFETY, READ AND UNDERSTAND OWNER'S MANUAL. DO NOT PICK UP TOXIC OR FLAMMABLE MATERIALS, HOT ASHES OR COALS. DO NOT USE AROUND EXPLOSIVE LIQUIDS OR VAPORS.

SAVE THESE INSTRUCTIONS

The operation of any utility vac can result in foreign objects being blown into the eyes, which can result in severe eye damage. Always wear safety goggles complying with ANSI Z87.1 (shown on Package) before commencing operation. Safety Goggles are available at Sears retail or catalog stores.



INTRODUCTION

This Wet/Dry Vac is intended for either commercial or household use.

IMPORTANT NOTE
Please Read Carefully

Static Shocks Are Common — In dry areas or when the relative humidity of the air is low. To reduce the frequency of static shocks in your home the best remedy is to add moisture to the air with a console or installed humidifier.

OWNERS MANUAL CONTENTS

Item	Page
Warranty Information	2
Safety Instructions	2
Introduction	3
Unpacking and Checking Carton Contents	3
Assembly	4
Operation	7
Maintenance	9
Repair Parts	11

Unpacking and Checking Carton Contents

Remove entire contents of carton. Check each item against the Carton Contents List. Notify your Sears Store immediately if any parts are damaged or missing.

Carton Contents List

Key	Description	Qty.
A	Vac Assembly	1
B	Hose Assembly	1
C	Rectangular Nozzle	1
D	Filter	1
E	Filter Plate	1
F	Filter Nut	1
G	Float	1
H	Cage	1
I	Caster Foot	4
J	Caster	4

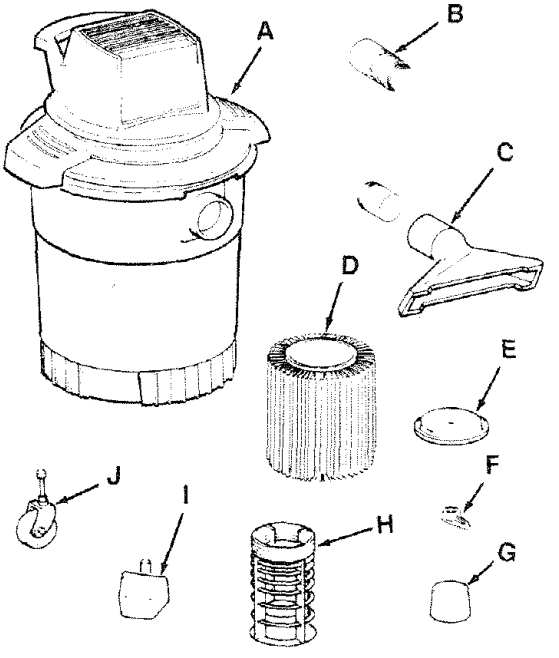

float/cage assembly

WARNING: For your own safety never connect plug to power source outlet until all assembly steps are complete and you have read and understood the safety and operation instructions. Do not operate vac with any parts damaged or missing.

1. Remove top section of the vac from the drum by lifting lid up out of the carton. Place the top section of vac upside down into the drum or on a clean smooth surface.

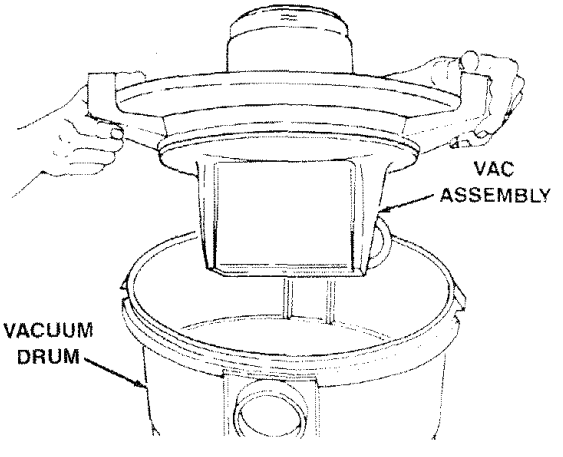

assembly

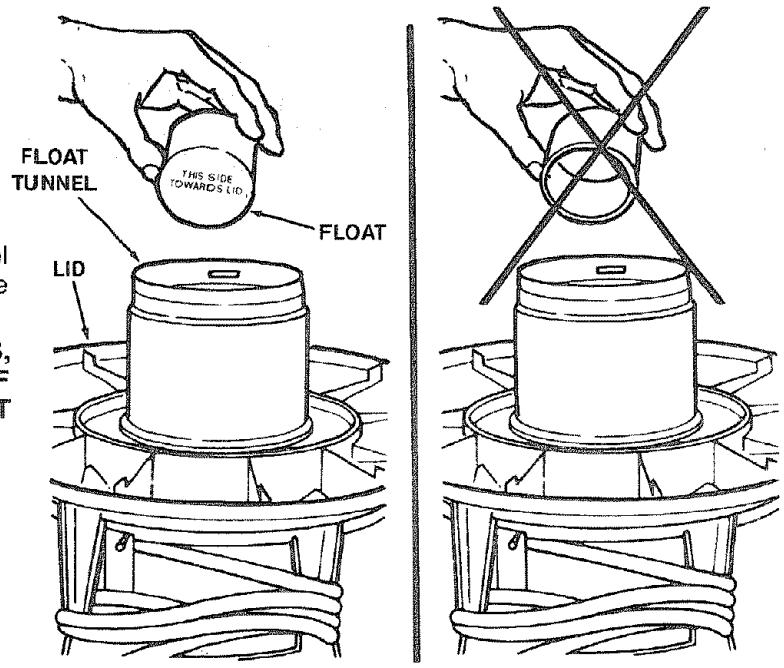

2. Locate the float. Place the float into the float tunnel with the words "This Side Towards Lid" laying face down on the lid.

WARNING: BE SURE TO KEEP HANDS, FINGERS, OR ANY OTHER FOREIGN OBJECTS OUT OF FLOAT TUNNEL WHEN ASSEMBLING THE FLOAT TO AVOID INJURY OR DAMAGE TO VAC.

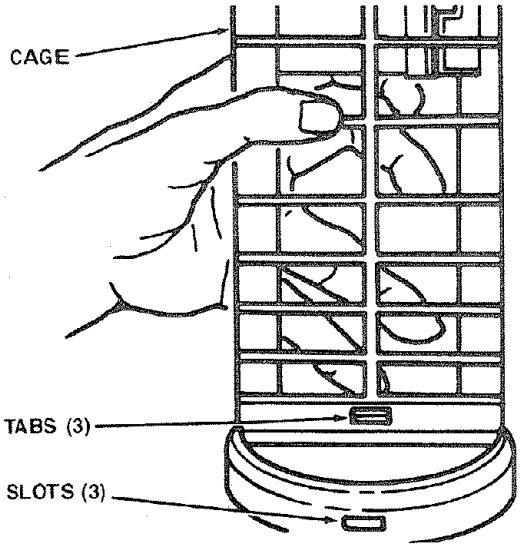

3. Line up cage tabs to the slots in the float tunnel of the lid assembly.
4. Push on the cage until the tabs snap into the slots for a secure fit.

NOTE: If the cage needs to be removed, because the float is placed in the wrong way use a slotted screwdriver and apply the slotted end to one of the cage tabs. Push in on the tab and lift the cage up. Tilt the cage slightly away from the open slot to release the other two tabs. Pull the cage away from the lid. To replace follow float cage assembly instructions.

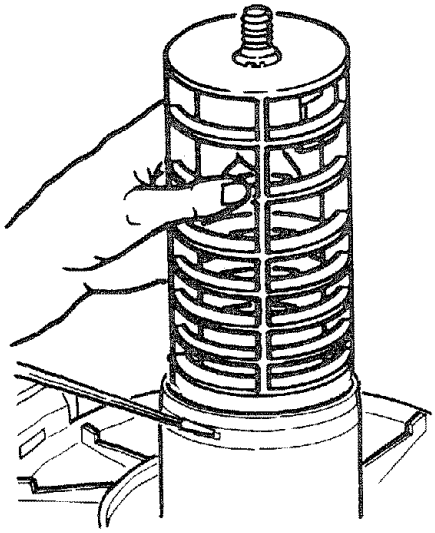

filter assembly

1. Carefully put the filter onto the cage by sliding it over the lip covering the 3 slots until it rests on the shoulder.
2. Place the hole of the filter plate over threaded screw of the cage.
3. Gently push on the filter plate in order for the rubber ring of the filter to seat inside the circular channel of the filter plate.
4. Place filter nut onto threaded screw and tighten it down. Finger tight only.

NOTE: Lever of nut should be away from plate as shown.

CAUTION: Do not overtighten as this will cause deformation or cracks in the filter plate or cage. Nut lever should be away from plate.

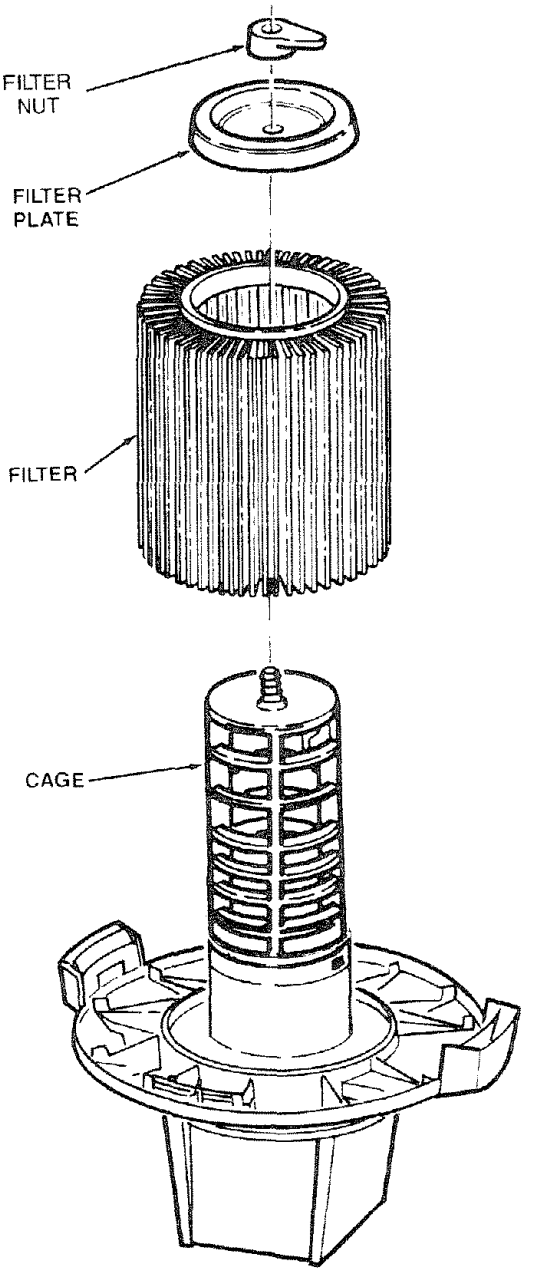

caster/caster foot assembly

1. Turn the dust drum upside down on the floor.
2. Insert the caster feet into the bottom of drum, as shown. (4 places)
3. Push on the caster foot until the foot is flush with bottom of the dust drum.
4. Insert the caster stem into the socket of the caster foot, as shown. (4 places)
5. Push on the caster until the ball on the caster stem is inserted all the way into the socket. You will be able to hear the ball snap into the socket and the caster will swivel easily when positioning is correct.
6. Turn the drum upright.

NOTE: If your casters are noisy you may put a drop of oil on the roller shaft to make them quieter.

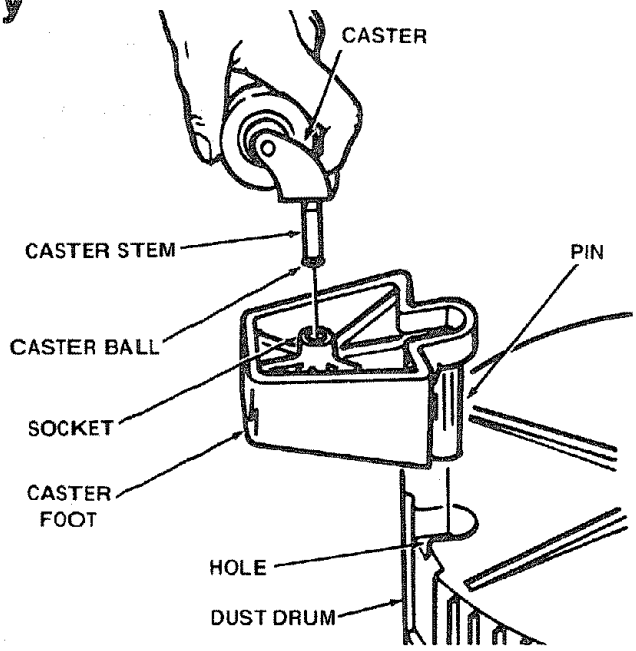

NOTE: If the occasion should arise the hose adaptor can be removed from the hose. This could be done by a twisting and pulling action of the adaptor from the hose.

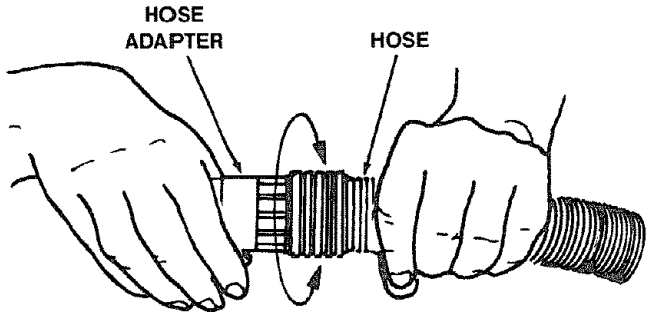

vac assembly

1. Line up diverter of top portion of vac with the vacuum inlet of the dust drum.
2. The handles with flexible latches inside are to be positioned to the locking tabs on the drum. Press down on the handles until the flexible latches snap onto the tabs on the drum.

NOTE: Latches will not snap on if top portion of vac assembly is on backwards.

3. Push flexible end into vacuum inlet of dust drum.
4. Put retangular nozzle onto end of hose.

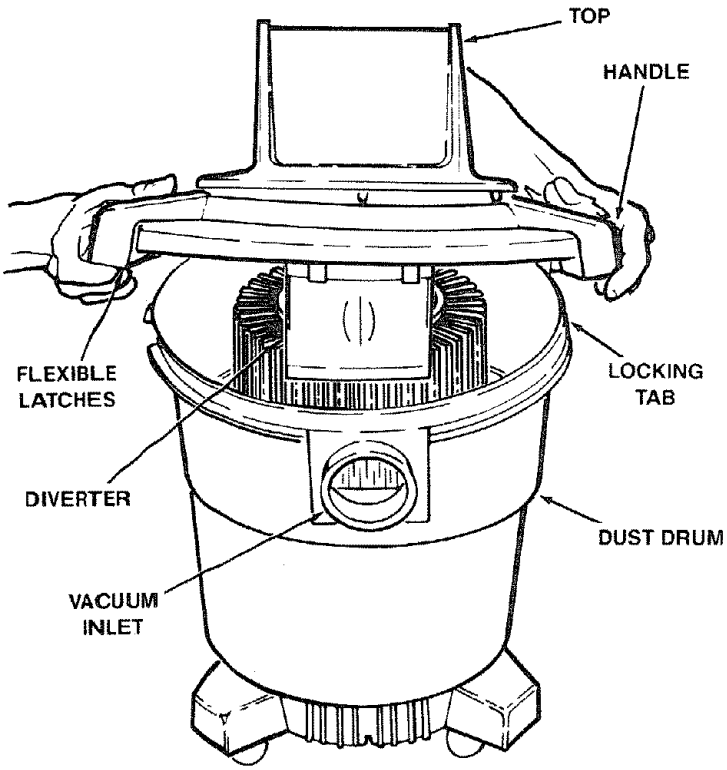

parts and features

1. Familiarize yourself with the controls and features of your vac.

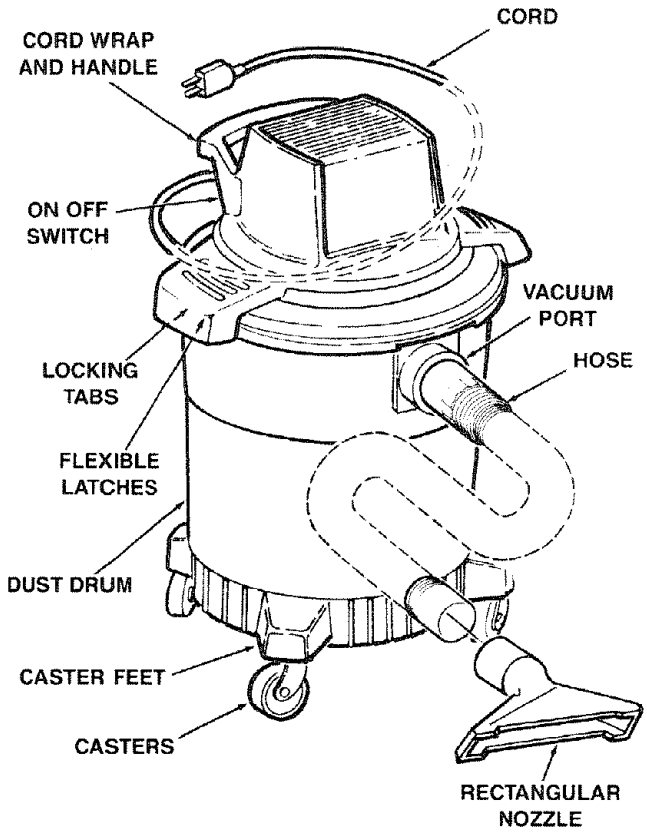

operations

WARNING

To avoid fire or explosion caused by the igniting of vapors or dust due to the arcing of the motor brushes, do not operate this vac in areas with flammable vapors such as lighter fluid, cleaners, oil-base paints, gasoline, alcohol or explosive dust such as coal, magnesium, grain or gun powder in the air. Do not vacuum explosive dust, flammable or combustible liquids or hot ashes. Do not use this vac as a sprayer for any flammable or combustible liquid. To avoid health hazards from vapors or dusts, do not vacuum toxic materials. To avoid electrical shock do not expose to rain. Store vac indoors. Unplug power cord before changing or cleaning filter or emptying the dust drum.

VACUUMING DRY MATERIALS

1. The filter must be in correct position at all times to avoid leaks and possible damage to vac.
2. When using your vac to pick up very fine sawdust from drywall type material it will be necessary for you to empty the drum and clean the filter at more frequent intervals to maintain peak vac performance.

NOTE: A dry filter is necessary to pick up dry material. If you use your vac to pick up dust when the filter is wet, the filter will clog quickly and be very difficult to clean.

3. If your filter is wet but you need to use the vac to pick up dry material, you can quickly dry the filter by running the vac without hose attached for 10 minutes. The clean air rushing through the vac will dry the filter enough for dry pick up.

VACUUMING LIQUIDS

1. When the liquid in the drum reaches a predetermined level, the vac which is equipped with a float mechanism which will rise automatically to cut off airflow. When the float has risen, turn off the vac, unplug the power cord, and empty the drum.
2. After using the vac to pick up liquids, the filter must be dried to avoid possible mildew and damage to the filter.
3. When picking up small amounts of liquid the filter may be left in place.
4. When picking up large amounts of liquid we recommend that the filter be removed. If the filter is not removed, it will become saturated and misting may appear in the exhaust air from the handles.

CAUTION: To avoid damage to the vac do not run motor with float in up position.

NOTE: You will know that the float has risen because vac airflow ceases and the motor noise will become higher in pitch—due to increase in the motor speed.

EMPTYING THE DRUM

WARNING: TO AVOID INJURY FROM ACCIDENTAL STARTING, UNPLUG POWER CORD BEFORE EMPTYING THE DRUM.

1. Remove top portion of the vac.
2. Dump the drum contents into the proper waste disposal container. Dump drum contents opposite the vacuum inlet to avoid spillage.

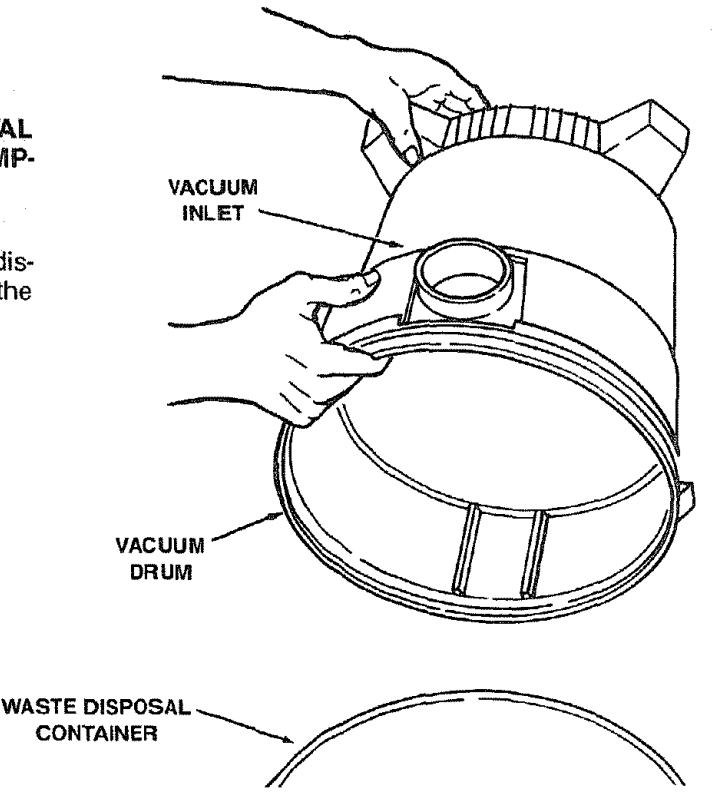

CORD USE INSTRUCTIONS

This vac comes with a double-insulated motor which allows the cord to plug in all receptacles. Be sure to have cord pulled completely off the cord wrap in order to vacuum maximum area. If more cord is needed use the proper gauge wire extension cord.

CAUTION: Do not run over cord with vacuum nor step on cord while vacuuming. This could cause plug to be pulled from outlet causing electrical or fire hazard.

CORD WRAP

The cord wrap provided on this vac enables you to wrap the cord for easy storage when not in use.

MOVING THE VAC

1. To avoid dropping the vac due to latch release or part breakage, pick the vac up by the lip of the dust drum.
2. DO NOT pick the vac up by the lid handles. For short transportation the cord wrap (not cord) can also be used for carrying the vac when the drum is empty.

CAUTION: Do not use the cord wrap or handles for carrying when vac contains debris or liquid because the weight may cause a separation of lid and drum, which could cause part breakage. Instead, roll the vac on it's casters or pick it up by the drum lip.

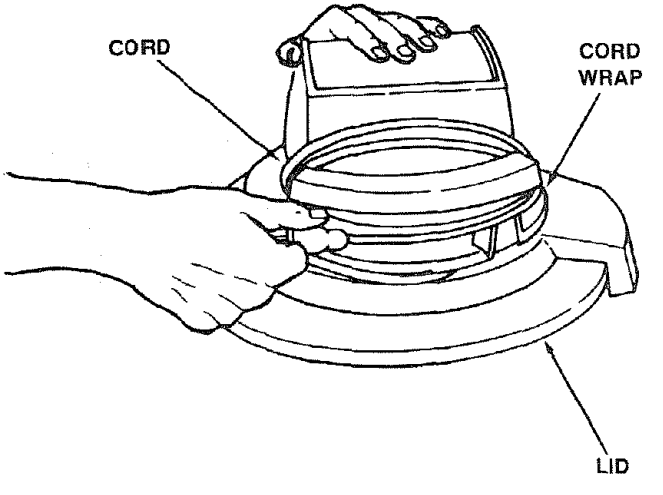

filter maintenance

WARNING: TO AVOID INJURY FROM ACCIDENTAL STARTING, UNPLUG POWER CORD BEFORE CHANGING OR CLEANING FILTER.

NOTICE: This filter is made of high quality paper designed to stop very small particles of dust. The filter can be used for wet or dry pick up. Handle the filter carefully when removing to clean or installing it. Creases in the filter pleats may occur from installation but creases will not affect the performance of the filter.

Removal

To remove the old filter for cleaning or replacement:

1. Remove the nut from the threaded screw on the filter and, lift the filter off the cage.

CAUTION: To avoid damage to the blower wheel, always reinstall the filter before using the vac for debris pick up.

Installation

To ensure a proper seal, clean the lid area where the filter will set. Slide the new filter over the cage. Replace plate then run nut down threads finger tight only. Do not overtighten as this will cause deformation or cracks in the filter. (See pg. 5)

WARNING: DO NOT REMOVE THE FILTER CAGE. IT IS THERE TO HELP PREVENT YOUR FINGERS FROM GETTING INTO THE BLOWER WHEEL.

Cleaning

Your filter should be cleaned often to maintain peak vac performance.

NOTE: Be sure to dry the filter before storing or picking up dry debris.

Dry Filter

1. Some removal of dry debris can be accomplished without removing the filter from the vac by slapping your hand on top of the lid while the vac is off.
2. After filter removal from vac, remove the dry debris by gently tapping the filter against the inside wall of your waste container and the debris will loosen and fall.

NOTE: For best results of cleaning due to accumulated dust, clean the filter in an open area. Cleaning SHOULD be done outdoors and not in the living quarters.

3. For thorough cleaning of dry filter with fine dust (no debris) you may run water through it as described under Wet Filter cleaning.

Wet Filter

After filter is removed a wet filter should be cleaned by running water through it from a hose or spigot. Take care that water pressure from the hose is not strong enough to damage the filter.

IMPORTANT: You can quickly dry the filter by running the vac without the hose assembly attached for approximately 10 minutes with filter in place to speed up drying. Check the filter for tears or small holes. Even a small hole can cause a lot of dust to come out of your vac. Do not use a filter with holes or tears in it. Replace it immediately.

WET/DRY VAC MAINTENANCE

CLEANING LID ASSEMBLY

To keep your Wet/Dry Vac looking its best, clean the outside with a cloth dampened with warm water and mild soap.

CLEANING DRUM

Dry dirty interior

1. Dump debris out.
2. Wash drum thoroughly.

Wet dirty interior

1. Dump debris out.
2. For sanitary reasons, never leave wet debris in vac drum after use.
3. The drum can be thoroughly washed by scrubbing when filled with warm soapy water.

IMPORTANT!—To assure product SAFETY and RELIABILITY, repairs and adjustment should be performed by Sears Service Centers, always using Sears replacement parts.

PARTS LIST FOR 8 GALLON WET/DRY VAC
MODEL NO. 113.179430

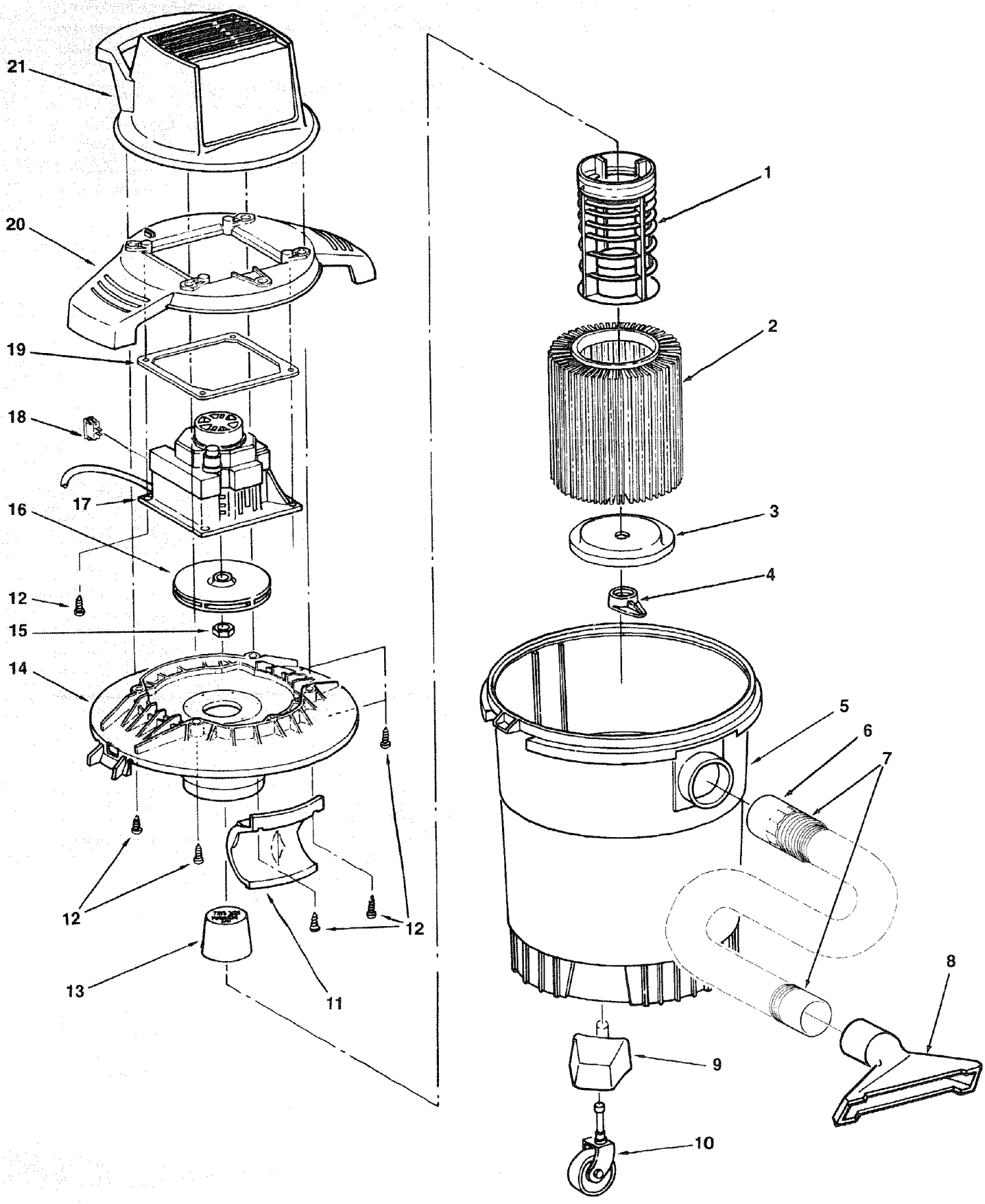

PARTS LIST FOR 8 GALLON WET/DRY VAC
MODEL NO. 113.179430

Always order by Part No. — Not by Key No.

Key No.	Part No.	Description
1	73362	Cage, Filter
2	9-17816	† Filter Assembly
3	73317	Plate, Filter
4	73316	Nut, Filter
5	817466	Drum, Dust
6	73324	Adapter, Hose
7	9-17820	† Hose
8	9-16922	† Nozzle, Rectangular
9	73164	Foot, Caster
10	73137	Caster
11	73348	Deflector
12	STD611007	* Screw, Pan Cross Type "AB" No. 10 x 3/4

Key No.	Part No.	Description
13	73349	Float
14	73379	Lid Assembly
15	73352	Nut, Hex Flange 1/4-20
16	815223-3	Wheel, Blower
17	818079	Motor Assembly (Includes Key Numbers 15 & 16)
18	73370	Switch
19	814948-1	Gasket-Motor
20	817987-4	Collector Assembly
21	73353	Cover Assembly, Motor
—	SP5241	Manual, Owners (Not Illustrated)

* Standard Hardware Item—May Be Purchased Locally.

† Stock Item - May be secured through the hardware Department of most Sears retail stores or catalog order houses.

SERVICING OF DOUBLE-INSULATED WET/DRY VAC

In a double-insulated Wet/Dry Vac, two systems of insulation are provided instead of grounding. No grounding means is provided on a double-insulated appliance, nor should a means for grounding be added. Servicing a double-insulated Wet/Dry Vac requires extreme care and knowledge of the system, and should be done only by qualified service personnel. Replacement parts for a double-insulated Wet/Dry Vac must be identical to the parts they replace. Your double-insulated Wet/Dry Vac is marked with the words "DOUBLE INSULATED" and the symbol  (square within a square) may also be marked on the appliances.

SEARS

owners manual

SERVICE

MODEL NO. 113.179430

8-GALLON WET/DRY VAC

HOW TO ORDER REPAIR PARTS

8-GALLON WET/DRY VAC

Now that you have purchased your 8-gallon Wet/Dry Vac, should a need ever exist for repair parts or service, simply contact any Sears Service Center and most Sears, Roebuck and Co. stores. Be sure to provide all pertinent facts when you call or visit.

Model and serial number may be found on the Motor Cover of your Wet/Dry Vac.

WHEN ORDERING REPAIR PARTS, ALWAYS GIVE THE FOLLOWING INFORMATION:

PART NUMBER	PART DESCRIPTION
MODEL NUMBER 113.179430	NAME OF ITEM WET/DRY VAC

All parts listed may be ordered from any Sears Service Center and most Sears stores. If the parts you need are not stocked locally, your order will be electronically transmitted to a Sears Repair Parts Distribution Center for handling.

Sold by SEARS, ROEBUCK AND CO., Chicago, IL 60684 U.S.A.

Part No. SP5241 Form No. SP5241-1 Printed in U.S.A. 12/89