Save This Manual
For Future Reference

SEARS

owner's manual

Model No.
113.179345

Serial
Number _____

Model and serial number may be found on the back side of vac top. You should record both model and serial number in a safe place for future use.

FOR YOUR SAFETY

READ ALL INSTRUCTIONS CAREFULLY

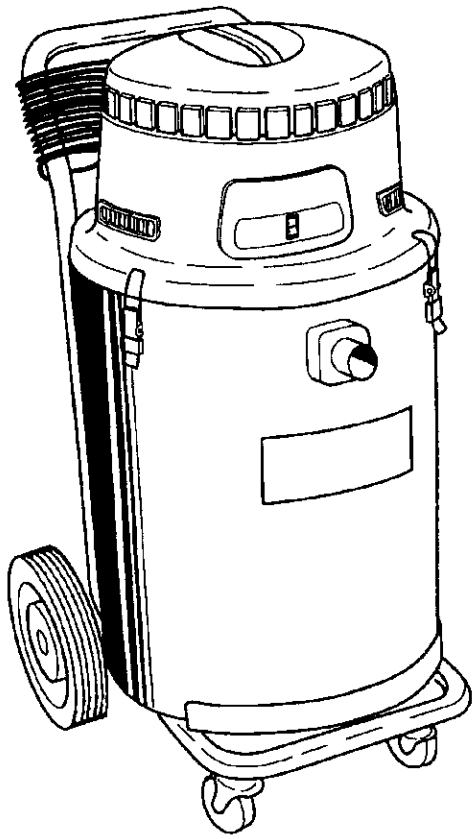

CRAFTSMAN®

PROFESSIONAL

18 GALLON COMMERCIAL WET/DRY VAC

- assembly
- operating
- repair parts

Sears, Roebuck and Co., Hoffman Estates, IL. 60179 U.S.A.

Part No. SP6225

Printed in Mexico 2/00

FULL ONE YEAR WARRANTY
ON CRAFTSMAN WET/DRY VAC

If within one year from the date of purchase, this Craftsman Vac fails due to a defect in material or workmanship, Sears will repair it, free of charge.

If this Craftsman Vac is used for commercial or rental purposes, this warranty coverage applies for only 90 days from date of purchase.

Warranty service is available by simply contacting the nearest Sears Service Center/Department throughout the United States.

This warranty applies only while this product is used in the United States.

This warranty gives you specific legal rights, and you may also have other rights which vary from state to state.

Sears, Roebuck and Co., D817 WA, Hoffman Estates, IL 60179

IMPORTANT SAFETY INSTRUCTIONS

Safety is a combination of common sense, staying alert and knowing how your vac works. Read this manual to understand the vac.

Safety Signal Words

DANGER: means if the safety information is not followed someone **will** be seriously injured or killed.

WARNING: means if the safety information is not followed someone **could** be seriously injured or killed.

CAUTION: means if the safety information is not followed someone **may** be injured.

When using your vac, follow basic safety precautions including the following.

WARNING - To reduce the risk of fire, electric shock, or injury:

Read and understand this owner's manual and all labels on the vac before operating. Use only as described in this manual. To avoid personal injury or damage to vac, use only Sears Craftsman recommended accessories.

Sparks inside the motor can ignite flammable vapors or dust. To reduce the risk of fire or explosion:

- Do not vacuum, or use this vac near, flammable or combustible liquids, gases, or explosive dusts such as gasoline or other fuels, lighter fluid, cleaners, oil-based paints, natural gas, hydrogen, coal dust, magnesium dust, grain dust, or gun powder.
- Do not use vac as a sprayer.

Do not vacuum anything that is burning or smoking, such as cigarettes, matches, or hot ashes.

Do not vacuum fireplace soot or ash, this is a very fine dust which will not be captured by the filter and may cause damage.

To reduce the risk of health hazards from vapors or dusts, do not vacuum toxic materials.

Do not use or store near hazardous materials.

To reduce the risk of electric shock, do not expose to rain. Store indoors.

Do not allow to be used as a toy. Close attention is necessary when used by or near children.

For dry pickup, do not use this vac with a torn filter or without the filter installed.

Do not leave vac when plugged in. Unplug from outlet when not in use and before servicing. Turn off vac before unplugging.

To reduce the risk of injury from accidental starting, unplug power cord before changing or cleaning filter.

Connect to a properly grounded outlet only. See "Grounding Instructions".

Do not unplug by pulling on cord. To unplug, grasp the plug, not the cord.

Do not use with damaged cord, plug or other parts. If your vac is not working as it should, has missing parts, has been dropped, damaged, left outdoors, or dropped into water, return it to a Sears Service Center.

Do not pull or carry by cord, use cord as handle, close a door on cord, or pull cord around sharp edges or corners.

Do not run Wet/Dry Vac over cord.

Keep cord away from heated surfaces.

Do not handle plug or the vac with wet hands.

Do not put any object into ventilation openings. Do not vacuum with any ventilation openings blocked; keep free of dust, lint, hair or anything that may reduce air flow.

Keep hair, loose clothing, fingers, and all parts of body away from openings and moving parts.

To reduce the risk of falls, use extra care when cleaning on stairs.

Observe the following warnings that appear on the motor housing of your vac.

WARNING: To reduce the risk of electric shock - do not expose to rain - store indoors.

⚠WARNING

For your own safety, read and understand owner's manual. Do not pick up hot ashes, coals, toxic, flammable or other hazardous material. Do not use around explosive liquids or vapors.

SAVE THESE INSTRUCTIONS

The operation of any utility vac can result in foreign objects being blown into the eyes, which can result in severe eye damage. Always wear safety goggles complying with ANSI Z87.1 (shown on package) before commencing operation. Safety Goggles are available at Sears retail stores.



To reduce the risk of hearing damage, wear ear protectors when using the vac for extended hours or when, using it in a noisy area.

For dusty operations, wear dust mask.Use only extension cords that are rated for outdoor use. Extension cords in poor condition or that are too small in wire size can pose fire and shock hazards. When using an extension cord, be sure it is in good condition. Using any extension cord will cause some loss of power. To keep the loss to a minimum, use the following table to choose the minimum wire size extension cord.

Extension Cord Length	Gauge (A.W.G.)
0-50 Ft.	14
50-100 Ft.	12

Grounding Instructions

This appliance must be grounded. If it should malfunction or breakdown, grounding provides a path of least resistance for electric current to reduce the risk of electric shock. This appliance is equipped with a cord having an equipment-grounding conductor and grounding plug. The plug must be inserted into an appropriate outlet that is properly installed and grounded in accordance with all local codes and ordinances.

WARNING: Improper connection of the equipment-grounding conductor can result in a risk of electric shock. Check with a qualified electrician or service person if you are in doubt as to whether the outlet is properly grounded. Do not modify the plug provided with the appliance - if it will not fit the outlet, have a proper outlet installed by a qualified electrician.

This appliance is for use on a nominal 120 volt circuit, and has a grounded plug that looks like the plug shown. A temporary adaptor that looks like the adaptor shown may be used to connect this plug to a 2-pole receptacle as shown if a properly grounded outlet is not available. The temporary adaptor should be used only until a properly grounded outlet can be installed by a qualified electrician. The green colored rigid ear, lug or the like extending from the adaptor must be connected to a permanent ground such as a properly grounded outlet box cover. Whenever the adaptor is used, it must be held in place by a metal screw.

NOTE: In Canada, the use of a temporary adaptor is not permitted by the Canadian Electrical Code.

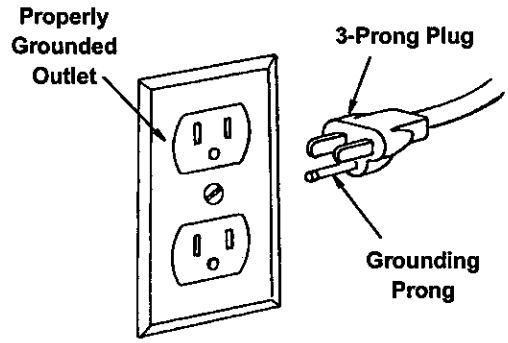

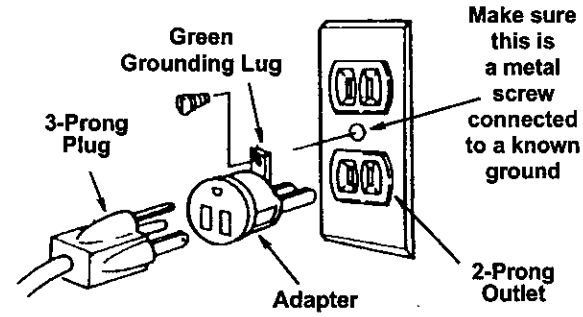

Introduction

This vac is intended for household or commercial use. It may be used for vacuuming of wet or dry media. Familiarize yourself with the following product features and read the entire owner's manual for specific usage of your new wet/dry vac.

This vac may also be used with catalog no. 17905 Squeegee Accessory, available through Sears Power & Hand Tool Catalog.

IMPORTANT NOTE
Please Read Carefully

Static Shocks Are Common - In dry areas or when the relative humidity of the air is low. To reduce the frequency of static shocks in your home the best remedy is to add moisture to the air with a console humidifier.

Table of Contents

Item	Page
Warranty	2
Safety Instructions	2
Safety Signal Words	2
Grounding Instructions	3
Introduction	3
Table of Contents	4
Unpacking and Checking Carton Contents	4
Getting to Know Your Vac	5
Cord Storage	5
Assembly	5
Tools Required	5
Rear Caster Assembly	5
Front Wheel Assembly	5
Cart Handle Spacer Assembly	5
Handle Assembly	6
Filter Assembly	6
Foam Filter	6
Cloth Filter Bag	6
Vac Assembly	7
Hose and Accessory Assembly	7
Operation	8
Vacuuming Dry Materials	8
Vacuuming Liquids	8
Emptying Dust Drum	8
Repair Parts	9
Maintenance	11
Cloth Bag Filter	11
Foam Filter	11
Installation	11

Unpacking and Checking Carton Contents

Remove entire contents of carton. Check each item against the Carton Contents List. Notify your Sears Store if any parts are damaged or missing.

Carton Contents List

Key	Description	Qty
A	18 Gallon Commercial Wet/Dry Vac	1
B	Handle	1
C	Hose	1
D	Wet Nozzle	1
E	Floor nozzle	1
F	Carpet Nozzle	1
G	Extension Wands	2
H	Foam Filter (may already be assembled)	1
J	Cloth Filter Bag (may already be assembled)	1
K	Hose End	2
L	Rear Wheel	2
M	Front Caster	2
N	Owners Manual	1
O	Squeegee Assembly (optional, provided with stock no. 179045 only).	

Key	Description	Qty
P	Bag Assembly (containing the following) (taped to handle of powerhead)	1
	Screw Pan Hd. 10-24 x 1-1/4	2
	Screw Pan Hd. 10-24 x 1/2	2
	Retaining Rings	2
	Flat Washer 3/16	2
	Lockwasher External 1/4	2
	Screws Hex Hd. 1/4-20 x 1/2	2
	Acorn Nut	2
	Flat Washer 3/8	2
	Lockwasher Internal 3/8	2
	Screws 10-24 x 3/4 (Stainless)	2
	Flat Washer 1/4	2
	Rubber Washer	4
	Cart Handle Spacer	2

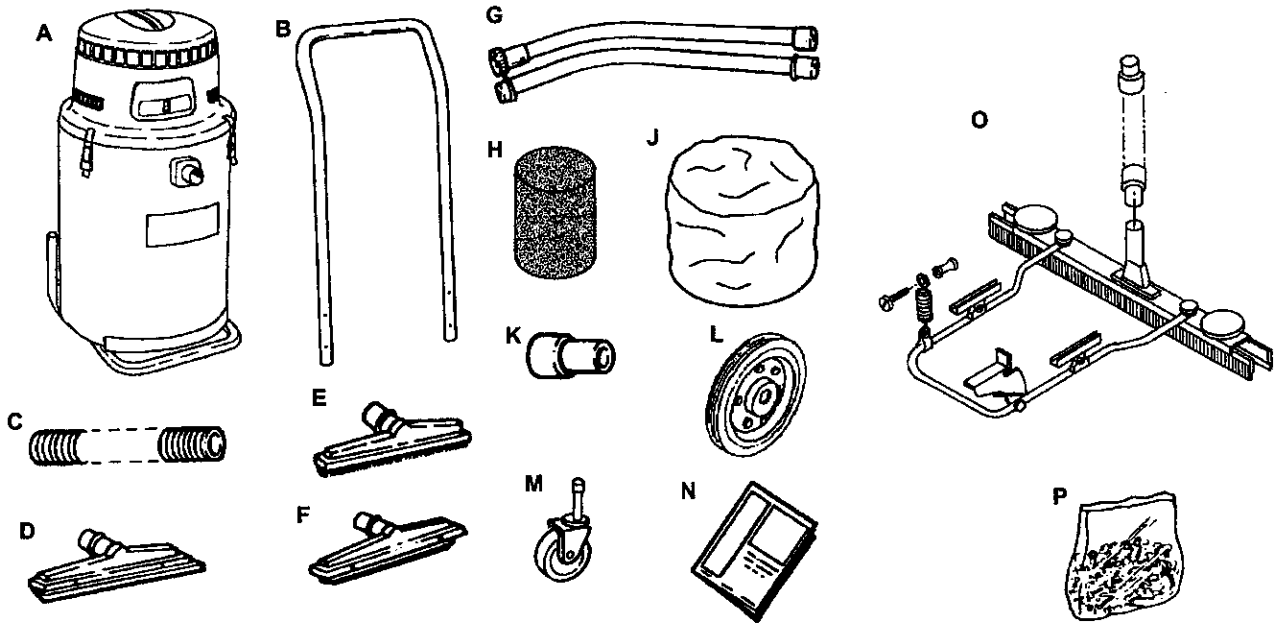

Getting to Know Your Vac

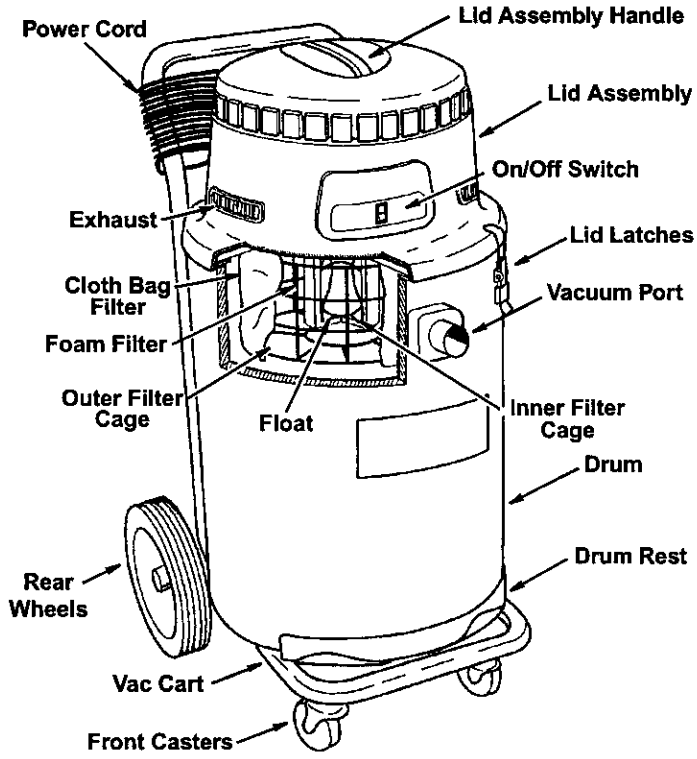

Optional Accessory

This vac may also be used with Catalog No. 17905 Squeegee accessory available in Sears Power & Hand Tool Catalog.

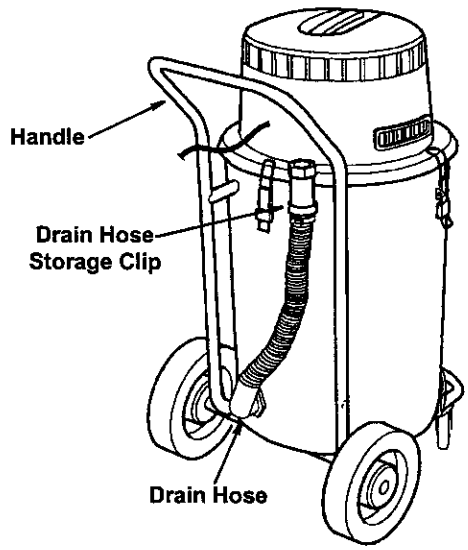

Cord Storage

When not in use, the power cord may be wrapped around the handle and held in place by the clip on the plug end.

CAUTION: A partially unwrapped cord may fall in coils near your feet. You could trip. To reduce the risk of this, always fully unwrap the cord before plugging it in.

Assembly

Tools Required

Flat blade screwdriver, pliers, 7/16 and 9/16 wrenches.

Rear Wheel Assembly

1. Turn drum upside down and lay on a clean, flat surface.
2. Using pliers, snap one retaining ring into groove 1-1/8" from the end of axle, repeat on other end.
3. Using a 7/16 wrench, attach rear wheel to drum caddy with a 1/4 flat washer, 1/4 external lockwasher and hex head 1/4-20 x 1/2 screw as shown.

Front Caster Assembly

1. Insert the front casters into the drum caddy, separated by a 3/8 internal lockwasher.
2. Using a 9/16 wrench, fasten each caster with a 3/8 flat washer and acorn nut as shown.

Cart Handle Spacer Assembly

1. Return drum to upright position.
2. Using a flat blade screwdriver, attach cart handle spacers to drum with rubber washers, 3/16 flat washer and 10-24 x 3/4 screw as shown.

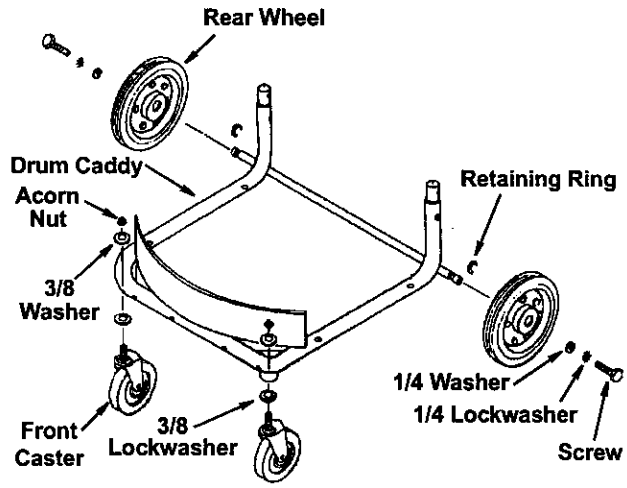

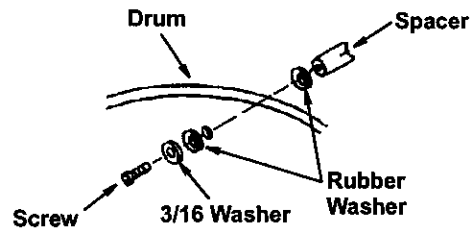

Assembly (continued)

Handle Assembly

1. Slide handle completely on to vac cart pegs at rear of the unit. Align holes on handle with holes on vac cart pegs and cart handle spacers.
2. Fasten the handle to the vac cart pegs with the 10-24 x 1/2 screws.
3. Fasten the handle to the cart handle spacers with the 10-24 x 1-1/4 screws.

NOTE: Do not completely tighten screws until all screws are in place.

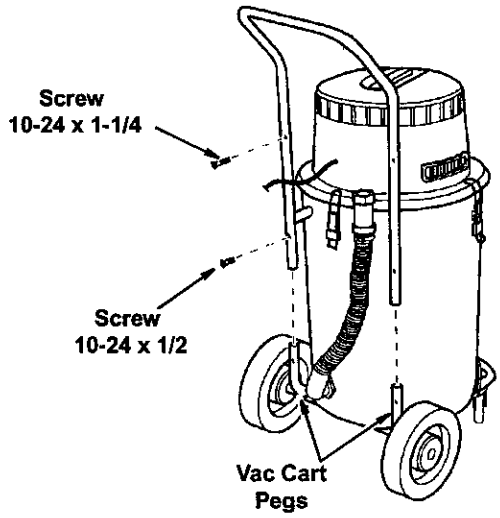

Filter Assembly

NOTE: Be sure filters are properly installed before using vac. Filters may come pre-assembled.

Foam Filter

1. Place the lid assembly of the vac upside down into the drum or on a clean, smooth surface.
2. Slide bottom of the foam filter into circular opening of outer filter cage.
3. Gently push down on sides, then top of foam filter until filter is secured completely under the outer filter cage.
4. The filter must be in correct position at all times to avoid leaks and possible damage to the vac. Be certain that the foam filter completely covers the inner filter cage and that the bottom of the filter rests against the lid, making sure there are no gaps between the filter and the lid.

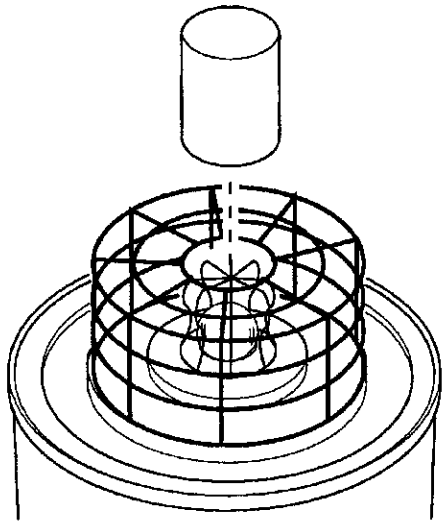

Cloth Filter Bag

1. Once foam filter is in place, stretch cloth filter bag over the outer filter cage.
2. Be sure the seams on the filter bag are facing the inside.
3. Pull down on the sides of the filter bag so that the elastic rests under the bottom lip of the outer filter cage.
4. The filter bag should completely cover the outer filter cage and the bottom of the filter bag should rest against the lid, making sure there are no gaps between the filter and the lid.

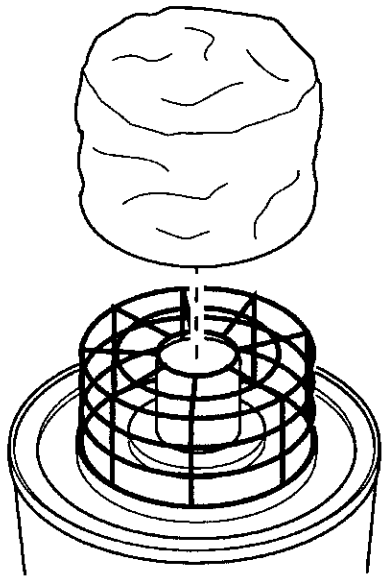

Vac Assembly

1. Locate the lid assembly and the drum.
2. Position the lid assembly with the on/off switch in the front, in line with the vacuuming port and the drum label on the vac. Allow the lid assembly to rest securely on the vac drum.
3. Rotate the three lid latches over the lid and fasten them by pressing down on the latch grip until latch is secure.

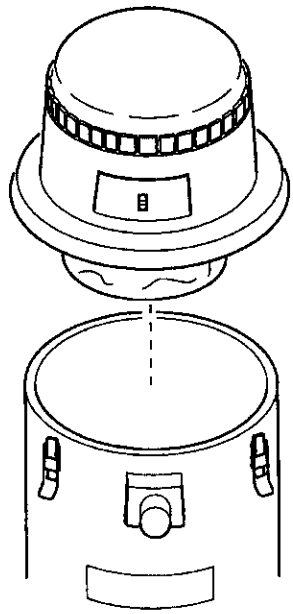

Hose and Accessory Assembly

1. Twist a hose end onto each end of the hose.
2. Press one plastic hose end into the vacuum port.
3. Press the other end of the hose into the upper extension wand (the one without the coupling ring).
4. Join the two wands, aligning the button and hole so they snap together.
5. To connect the accessories, loosen the ring on the extension wand (do not take if off), and insert the accessory of your choice. Tighten the ring to secure the accessory in place.
6. All nozzles can also connect directly to the hose.

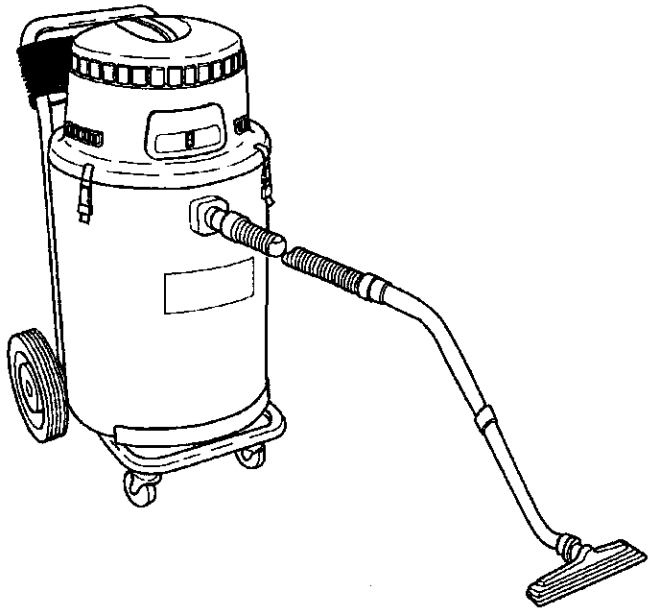

Operation

WARNING

To reduce the risk of fire or explosion, do not operate this vac in areas with flammable gases or flammable vapors such as lighter fluid, cleaners, oil-base paints, gasoline, alcohol or explosive dust such as coal, magnesium, grain or gun powder in the air. Do not vacuum explosive dust, flammable or combustible liquids or hot ashes. Do not use this vac as a sprayer. To reduce the risk of health hazards from vapors or dusts, do not vacuum toxic materials. To reduce the risk of electrical shock do not expose to rain. Store vac indoors. Unplug power cord before changing or cleaning filter or emptying the dust drum.

CAUTION: To reduce the risk of hearing damage wear ear protectors when using the vac or blower for extended hours or when using it in a noisy area. The operation of any utility vac or blower can result in foreign objects being blown into the eyes, which can result in severe eye damage. Always wear safety goggles complying with ANSI Z87.1 (shown on Package) before commencing operation. Safety Goggles are available at Sears retail stores.

Vacuuming Dry Materials

1. Both the foam filter and the cloth bag filter must be in the correct position at all times to reduce the risk of leaks and possible damage to the vac.
2. When using your vac to pick up very fine dust, it will be necessary for you to empty the drum and clean the filter at more frequent intervals to maintain peak vac performance.

NOTE: A dry filter is necessary to pick up dry material. If you use your vac to pick up dust when the filter is wet, the filter will clog quickly and be very difficult to clean.

3. If your filter is wet but you need to use the vac to pick up dry material, you can quickly dry the filter by running the vac without hose attached for about 10 minutes. The clean air rushing through the vac will help dry the filter.

Vacuuming Liquids

1. Remove cloth bag filter, leave foam filter in place, and reattach lid assembly to drum.
2. After using the vac to pick up liquids, the filter must be dried to reduce the risk of possible mildew and damage to the filter.
3. When the liquid in the drum reaches a predetermined level, the float mechanism will rise automatically to cut off airflow. When this happens, turn off the vac, unplug the power cord, and empty the drum. You will know that the float has risen because vac airflow ceases and the motor noise will become higher in pitch, due to increased motor speed.

IMPORTANT: To reduce the risk of damage to the vac do not run motor with float in raised position.
NOTE: Never vacuum liquids with the cloth bag filter in place.

Emptying Dust Drum

WARNING: To reduce the risk of injury from accidental starting, unplug power cord before emptying the drum.

1. To remove the lid to empty the contents of the dust drum, simply lift up on the three latch grips and unhook the lid latches from the lid.
2. Pick up the lid assembly by the lid assembly handle and lay the lid assembly down on a clean, dry area while emptying the drum or changing the filter.
3. Dump the contents of the dust drum into a proper waste disposal container.
4. If the contents are liquid, you may dispose by using the drain provided at the rear of the drum for easy emptying. Simply pull out the drain plug at the end of the drain hose and allow the liquid to drain out of the vac drum.

WARNING: To reduce the risk of back injury or falls, do not lift a vac heavy with liquid or debris. Scoop or drain enough contents out to make the vac light enough to lift comfortably.

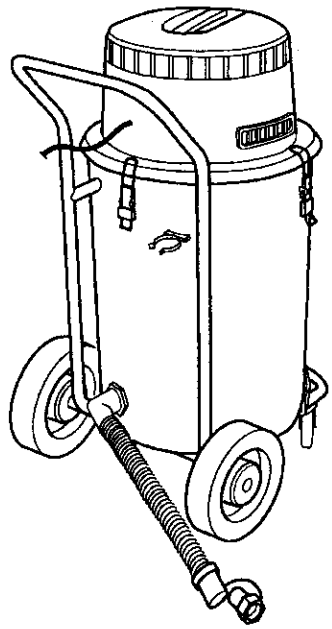

Repair Parts

Craftsman Professional 18 Gallon Commercial Wet/Dry Vac
Model Number 113.179345

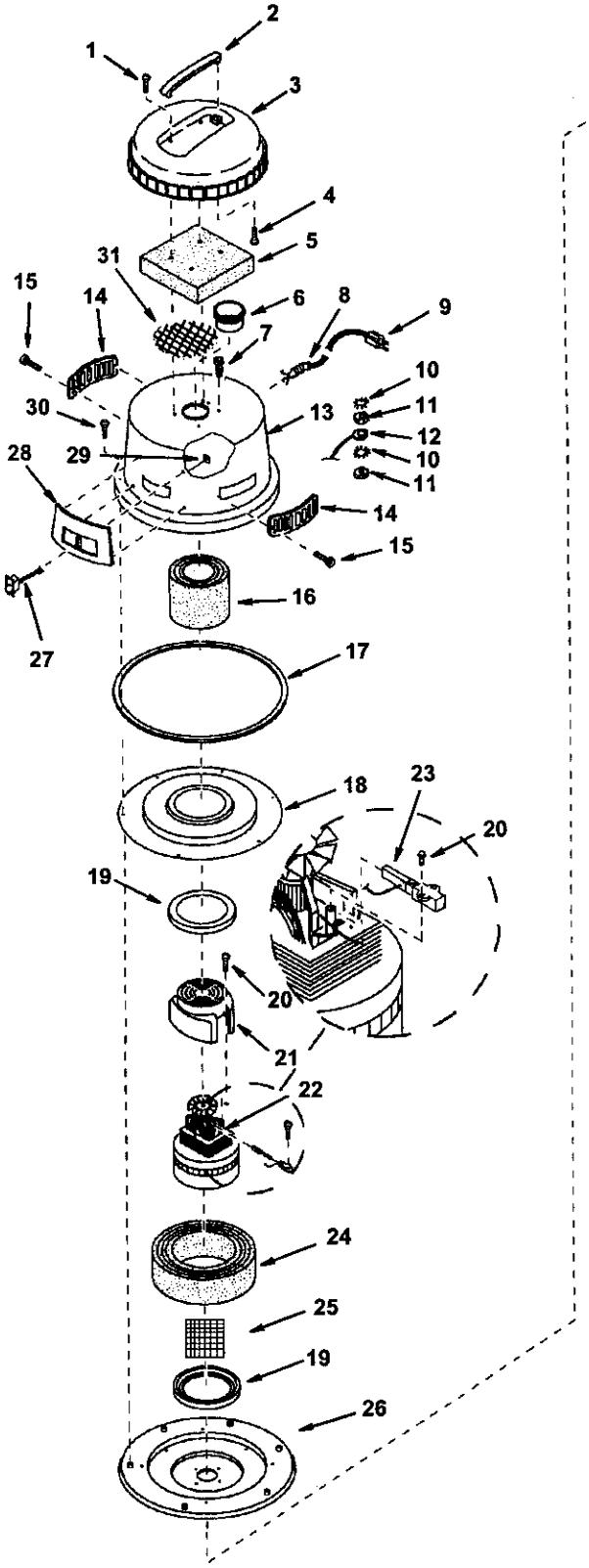

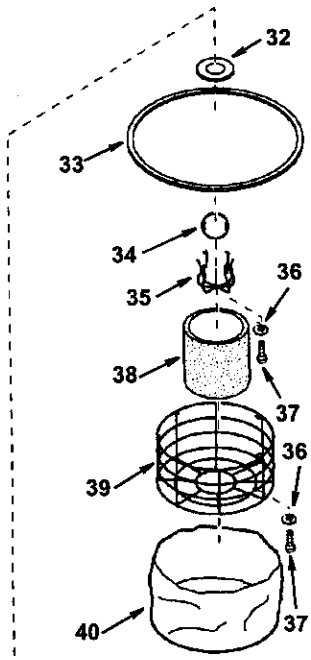

Always order by Part Number -
Not by Key Number

Key No.	Part No.	Description
1	826896	Screw Ty AB #10 x 1-3/4
2	826893	Cover Handle
3	826892	Motor-Cover
4	STD611007	* Screw #10 x 3/4
5	826895	Motor Cover Sound Foam
6	827401	Motor Inlet Grommet
7	STD510807	* Screw #8-32 x 3/4
8	827412	Strain Relief
9	827411	Cord w/Plug
10	STD551208	* External Lockwasher #8
11	STD541008	* Nut 8-32
12	826894	Lead Asm - Ground
13	826897	Motor Enclosure
14	826898	Exhaust Grill
15	STD610603	* Screw Type AB #6 x 3/8
16	827410	Motor Sound Foam
17	826899	Gasket Collector
18	827414	Collector
19	827415	Motor Gasket
20	STD610805	* Screw Hex Hd. Ty AB #8x1/2
21	827406	Motor Fan Cover
22	827416	Motor Assembly
23	827407	Brush & Brush Holder Asm.
24	827418	Blower Sound Foam
25	827425	Blower Guard
26	827417	Lid Assembly
27	827404	Switch
28	827402	Switch Panel
29	827403	Speed Nut
30	STD510803	* Screw #8-32 x 3/8
31	827574	Inlet Grill
32	827420	Float Gasket
33	827419	Lid Gasket
34	825738	Float
35	827421	Float Cage
36	STD551050	* Flat Washer 1/2x.203x1/16
37	STD611005	* Screw #10 x 3/8
38	827426	Foam Filter
39	827427	Filter Cage
40	827428	Fabric Filter
—	SP6225	Owners Manual (Not Illustrated)

* Standard Hardware Item - May Be Purchased Locally.

Repair Parts

Craftsman Professional 18 Gallon Commercial Wet/Dry Vac
Model Number 113.179345

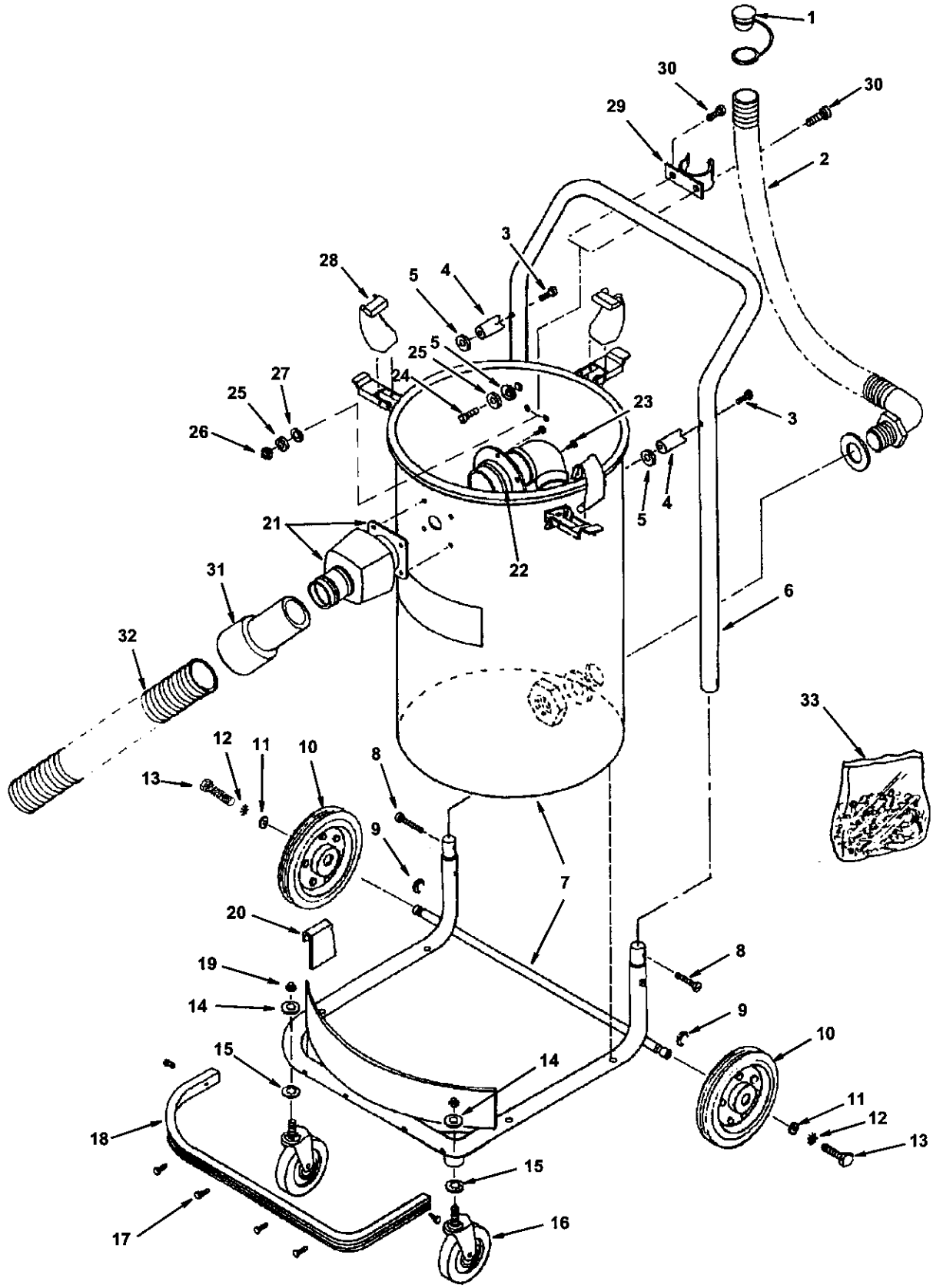

Repair Parts

Craftsman Professional 18 Gallon Commercial Wet/Dry Vac
Model Number 113.179345

Always order by Part Number - Not by Key Number

Key No.	Part No.	Description
1	826884	Hose Plug
2	827448	Hose Drain
3	805512-2	Screw 10-24 x 1-1/4
4	827441	Spacer Cart Handle
5	827443-1	Washer Rubber 5/32 x 7/16
6	827440	Cart Handle
7	827429	Drum & Chassis Assembly
8	805512	Screw 10-24 x 1/2
9	805641-4	Retaining Ring
10	827431	Wheel 10"
11	STD551025	* Washer Flat 1/4
12	STD551250	* Lockwasher External 1/4
13	STD512505	* Screw Hex Hd.1/4-20 x 1/2
14	STD551037	* Washer Flat 3/8
15	STD827438	* Lockwasher Internal 3/8
16	827437	Front Caster
17	827423	Screw Type AB #4 x 1/2

Key No.	Part No.	Description
18	826889	Bumper Front
19	STD541837	* Acorn Nut 3/8-16
20	826888	Molding-Chassis Trim
21	827424	Vacuum Inlet
22	827436	Inlet Elbow
23	827435	Screw Hex Hd. 8-32 x 3/4 (Stainless)
24	STD511107	* Screw Pan Hd 10-24 x 3/4 (Stainless)
25	STD551008	* Washer Flat 3/16 x 1/2 x 1/16
26	827408	Nut 8-32
27	827443	Washer Rubber 3/16 x 1/2
28	826877	Rubber Latch Tip
29	826881	Clamp Hose
30	STD510805	* Screw Hex Hd. 8-32 x 1/2 (Stainless)
31	73241	Hose End Soft
32	73249	Hose 1-1/2 Dia. x 10Ft.
33	828229	Bag Asm - Hardware

* Standard Hardware Item - May Be Purchased Locally.

WARNING: Do not attempt to service your wet/dry vac beyond that described in the owner's manual. For all other servicing contact your local Sears Service Center.

Maintenance

WARNING: To avoid injury from accidental starting, unplug power cord before changing or cleaning filters.

Your filters should be cleaned often to maintain peak vac performance.

IMPORTANT: After cleaning, check the filters for tears or small holes. Do not use a filter with holes or tears in it. Even a small hole can cause a lot of dust to come out of your vac. Replace it immediately.

IMPORTANT: To reduce the risk of damage to the blower wheel and motor, always reinstall the proper filters before using the vac.

CAUTION: Do not remove the filter cages or float. They are there to shut off airflow when the drum is full of liquids.

Cloth Bag Filter

1. For best results of cleaning accumulated dust, clean the filter in an open area. Cleaning **should** be done outdoors and not in living or working quarters.
2. Remove cloth filter from outer filter cage by gently pulling up on the bottom of the filter.
3. After the filter is removed from the vac, remove dry debris by simply shaking the filter.
4. Never wash cloth bag filter.
5. Make sure that the bottom of the cloth bag filter always fits well around the outer filter cage.

Foam Filter

1. Remove foam filter by pulling up on the top of the foam filter, so that the filter is pulled through the circular opening of the outer filter cage.
2. After the foam filter is removed, run cold water through the filter from a hose or spigot. Take care that the water pressure from the hose is not strong enough to damage the filter.
3. Let the foam filter dry completely before placing it on the vac again.

Installation

Refer to "Filter Assembly". Allow the filter to dry before reinstalling and storing the vac.

SEARS

owner's manual

Model No.
113.179345

Model and serial number may be found on the back side of vac top. You should record both model and serial number in a safe place for future use.

When requesting service or ordering parts, always provide the following information:

- Product Type
- Model Number
- Part Number
- Part Description

18 GALLON COMMERCIAL WET/DRY VAC

For in-home major brand repair service:
Call 24 hours a day, 7 days a week
1-800-4-MY-HOME (1-800-469-4663)
Para pedir servicio de reparación a domicilio – 1-800-676-5811

For the repair or replacement parts you need:
Call 6 am – 11 pm CST, 7 days a week
PartsDirect
1-800-366-PART (1-800-366-7278)
Para ordenar piezas con entrega a domicilio – 1-800-659-7084

For the location of a Sears Parts and Repair Center in your area:
Call 24 hours a day, 7 days a week
1-800-488-1222

For information on purchasing a Sears Maintenance Agreement or to inquire about an existing Agreement:
Call 9 am – 5 pm, Monday – Saturday
1-800-827-6655

SEARS HomeCentral℠

Sears Roebuck and Co., Hoffman Estates, IL. 60179 U.S.A.

© 1999 Emerson Electric Co.
Part No. SP6225 Form No. SP6225-2 Printed in Mexico 2/00