Save This Manual
For Future Reference

SEARS

owner's manual

MODEL NO.
113.177825

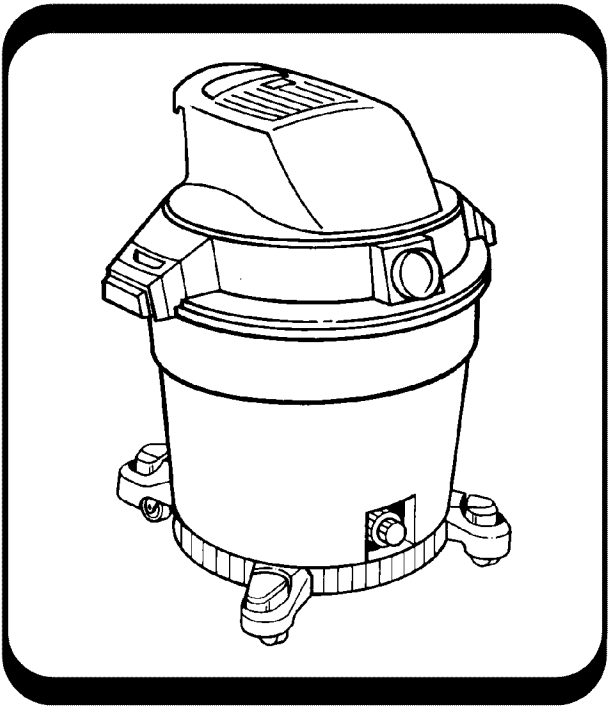

Serial
Number_____
Model and serial numbers may be found on the handle. You should record both model and serial numbers in a safe place for future use.

FOR YOUR SAFETY

READ ALL INSTRUCTIONS CAREFULLY

CRAFTSMAN®

12 GALLON FULL BLOWING WET/DRY VAC

- assembly
- operating
- repair parts

Sears, Roebuck and Co., Hoffman Estates, IL. 60179 U.S.A.

Part No. SP6113 Printed in Canada

FULL ONE YEAR WARRANTY ON CRAFTSMAN WET/DRY VACS

If within one year from the date of purchase, this Craftsman Wet/Dry Vac fails due to a defect in material or workmanship, Sears will repair it, free of charge.

If this Craftsman Wet/Dry Vac is used for commercial or rental purposes, this warranty coverage applies for only 90 days from date of purchase.

WARRANTY SERVICE IS AVAILABLE BY SIMPLY CONTACTING THE NEAREST SEARS SERVICE CENTER/DEPARTMENT THROUGHOUT THE UNITED STATES.

This warranty applies only while this product is used in the United States.

This warranty gives you specific legal rights, and you may also have other rights which vary from state to state.

Sears, Roebuck and Co., D817 WA, Hoffman Estates, IL. 60179

IMPORTANT SAFETY INSTRUCTIONS

Safety is a combination of common sense, staying alert and knowing how your vac works. Read this manual to understand the vac.

Safety Signal Words

DANGER: means if the safety information is not followed someone **will** be seriously injured or killed.

WARNING: means if the safety information is not followed someone **could** be seriously injured or killed.

CAUTION: means if the safety information is not followed someone **may** be injured.

When using your Wet/Dry Vac, follow basic safety precautions including the following.

WARNING - To reduce the risk of fire, electric shock, or injury:

Read and understand this owner's manual and all labels on the Wet/Dry Vac before operating. Use only as described in this manual. To avoid personal injury or damage to Wet/Dry Vac, use only Sears Craftsman recommended accessories. Sparks inside the motor can ignite flammable vapors or dust. To avoid fire or explosion:

- Do not vacuum, or use this Wet/Dry Vac, near flammable or combustible liquids, gases, or explosive dusts, such as gasoline or other fuels, lighter fluid, cleaners, oil- based paints, natural gas, hydrogen, coal dust, magnesium dust, grain dust, or gun powder.
- Do not use Wet/Dry Vac as a sprayer.

Do not vacuum anything that is burning or smoking, such as cigarettes, matches, or hot ashes.

Do not vacuum fireplace soot or ash. This is a very fine dust which will not be captured by the filter and may cause damage.

To avoid health hazards from vapors or dusts, do not vacuum toxic materials.

Do not use or store near hazardous materials.

To avoid electric shock, do not expose to rain. Store indoors.

Do not allow Wet/Dry Vac to be used as a toy. Close attention is necessary when used by or near children.

Do not use this Wet/Dry Vac with a torn filter or without the filter installed except when vacuuming liquids as described in the operation section of this manual.

Do not leave Wet/Dry Vac when plugged in. Unplug from outlet when not in use and before servicing. Turn off Wet/Dry Vac before unplugging.

To avoid injury from accidental starting, unplug power cord before changing or cleaning filter.

Do not unplug by pulling on cord. To unplug, grasp the plug, not the cord.

Do not use with damaged cord, plug or other parts. If your Wet/Dry Vac is not working as it should, has missing parts, has been dropped, damaged, left outdoors, or dropped into water, return it to a Sears Service Center.

Do not pull or carry by cord, use cord as handle, close a door on cord, or pull cord around sharp edges or corners. Do not run Wet/Dry Vac over cord. Keep cord away from heated surfaces.

Do not handle plug or the Wet/Dry Vac with wet hands.

Do not put any object into ventilation openings. Do not vacuum with any ventilation openings blocked; keep free of dust, lint, hair or anything that may reduce air flow.

Keep hair, loose clothing, fingers, and all parts of body away from openings and moving parts.

To avoid falls, use extra care when cleaning on stairs.

This Wet/Dry Vac is double-insulated, eliminating the need for a separate grounding system. Use only identical replacement parts. Read the instructions for Servicing Double-Insulated Wet/Dry Vacs before servicing.

Observe the following warnings that appear on the motor housing of your Wet/Dry Vac.



DOUBLE INSULATED — GROUNDING NOT REQUIRED

WHEN SERVICING USE ONLY IDENTICAL REPLACEMENT PARTS

WARNING: To reduce the risk of electric shock - do not expose to rain - store indoors.

WARNING: For your own safety, read and understand owner's manual. Do not pick up hot ashes, coals, toxic, flammable or other hazardous materials. Do not use around explosive liquids or vapors.

SAVE THESE INSTRUCTIONS

The operation of any utility vac or blower can result in foreign objects being blown into the eyes, which can result in severe eye damage. Always wear safety goggles complying with ANSI Z87.1 (shown on package) before commencing operation. Safety Goggles are available at Sears retail stores.



To avoid hearing damage, wear ear protectors when using the vac for extended hours or when using it in a noisy area. For dusty operations, wear dust mask.

Use only extension cords that are rated for outdoor use. Extension cords in poor condition or that are too small in wire size can pose fire and shock hazards. When using an extension cord, be sure it is in good condition. Using any extension cord will cause some loss of power. To keep the loss to a minimum, use the following table to choose the minimum wire size extension cord.

Extension Cord Length	A.W.G.
0-50 Ft.	14
50-100 Ft.	12

Introduction

This Wet/Dry Vac is intended for household use only.

IMPORTANT NOTE
Please Read Carefully

Static Shocks Are Common - In dry areas or when the relative humidity of the air is low. To reduce the frequency of static shocks in your home the best remedy is to add moisture to the air with a console humidifier.

Owner's Manual Contents

Item	Page
Warranty Information	2
Safety Instructions	2
Introduction	4
Unpacking and Checking Carton Contents	4
Assembly	5
Operation	8
Maintenance	10
Repair Parts	12

Unpacking and Checking Carton Contents

Remove entire contents of carton. Check each item against the Carton Contents List. Some units may include accessories not shown. Notify your Sears Store immediately if any parts are damaged or missing.

Carton Contents List

Key	Description	Qty.
A	Vac Assembly	1
B	Hose Assembly	1
C	Utility Nozzle	1
D	Wet Nozzle	1
E	Car Nozzle	1
F	Hose Lock	1
G	Filter Nut	1
H	Filter Plate	1
J	Filter (Red Stripe)	1
K	Filter Cage	1
L	Float	1
M	Extension Wands	2
N	Caster Foot For Storage	4
O	Caster	4
P	Owners Manual	1

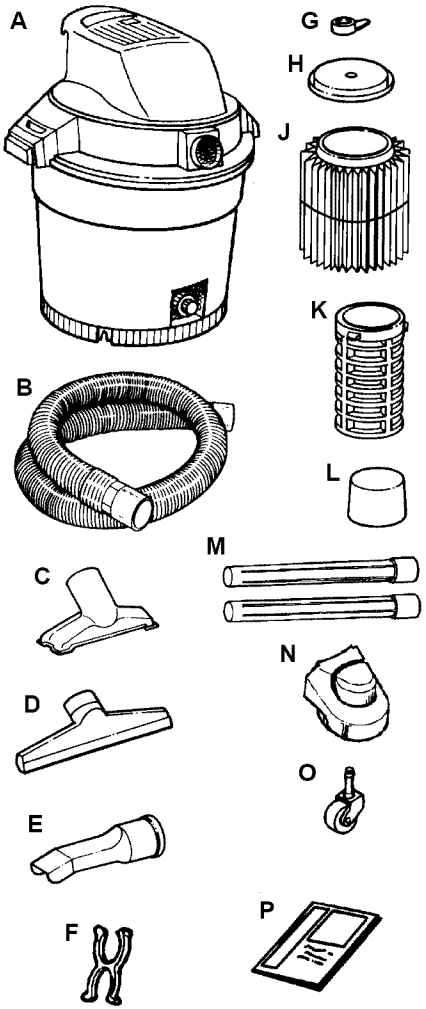

Float/Cage Assembly

WARNING: For your own safety, never connect plug to power source outlet until all assembly steps are complete and you have read and understood the safety and operation instructions. Do not operate vac with any parts damaged or missing.

1. Place the power assembly of vac upside down into the drum.
2. Locate the float. Place the float over the opening in the center of the lid with the words "This Side Towards Lid" laying face down over the hole.

WARNING: To reduce the risk of personal injury or damage to vac be sure to keep hands, fingers, or any other foreign objects out of the center opening when assembling the float.

3. Line up filter cage tabs with the slots in the center ring of the lid.
4. Push on the filter cage until the tabs snap into the slots for a secure fit.

NOTE: If filter cage needs to be removed, because the float is placed in the wrong way, use a slotted screwdriver and insert the blade near one of the tabs between the filter cage and the center ring of the lid. Pry the tab out of the slot. Tilt the cage and lift away from the lid. To replace, follow float/cage assembly instructions.

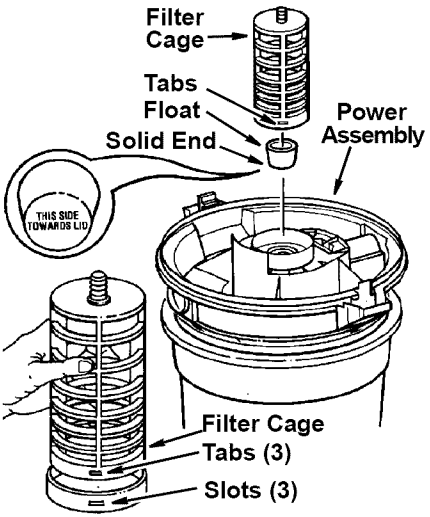

Filter Assembly

1. Carefully slide the filter over the filter cage, sliding it over the center ring covering the 3 slots until the filter stops against the lid.
2. Place the hole in the filter plate over threaded screw of the filter cage.
3. Gently push on the filter plate to seat the rubber ring of the filter inside the circular channel of the filter plate.
4. Place filter nut onto threaded screw and tighten it down. Finger tighten only.

NOTE: Lever of filter nut should be away from plate as shown.

IMPORTANT: Do not overtighten as this may deform or crack the filter plate or filter cage.

NOTE: Your filter has a red stripe that matches an in-store displayer. When you visit your local Sears store, just remember the color of your stripe for the correct size filter.

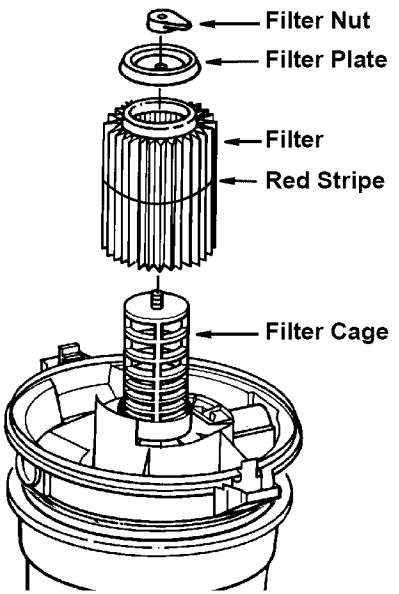

Caster/Caster Foot Assembly

1. Remove the power assembly from the dust drum and set aside.
2. Turn the dust drum upside down on the floor.
3. Insert the caster feet into the bottom of drum, as shown (4 places).
4. Push on the caster foot until the foot is flush with bottom of the dust drum.
5. Insert the caster stem into the socket of the caster foot, as shown (4 places).
6. Push on the caster until the ball on the caster stem is inserted all the way into the socket. You will hear the ball snap into the socket and the caster will swivel easily when positioning is correct.
7. Turn the drum upright.

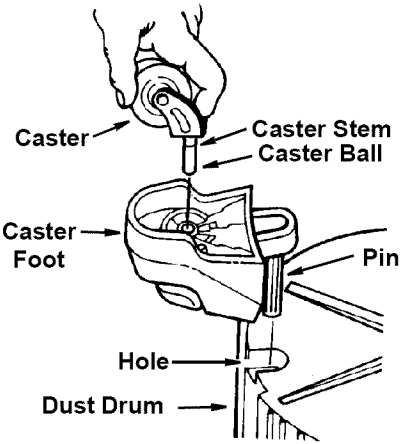

Vac Assembly

1. Line up vacuum port in power assembly with drain cap located on the front of the drum.
2. Place power assembly on top of drum with the handles snug against the drum channel.
3. Be sure power assembly completely covers the top of the drum so leakage does not occur.
4. Push down on top of the handles to cause the flexible locking tabs to hook onto the drum lip of the channel.
5. Make sure that the locking tabs are snapped in place to prevent the power assembly from coming off. (See inset below.)

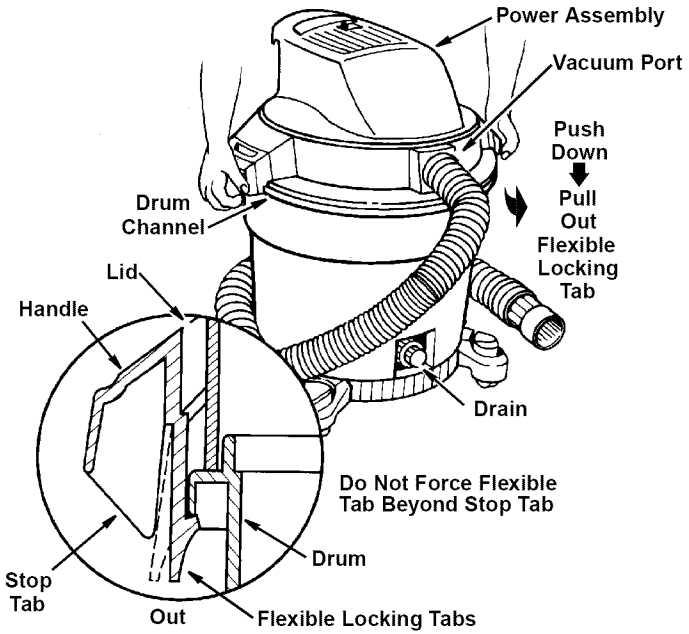

6. Insert the soft end of the hose, which is opposite the swivel end, into the vacuum port directly above the drain.
7. Place the utility nozzle securely on the swivel end of the hose and the vac is ready for use.

NOTE: The swivel end of the hose is removable if more hoses need to be attached for more length from the vac. To remove the swivel portion of the hose, grasp the hose swivel and firmly pull it out of the flexible hose. Connect the soft end of a second hose (accessory #9-17820) into the swivel end of the original hose by forcing the sections together until they fit tightly.

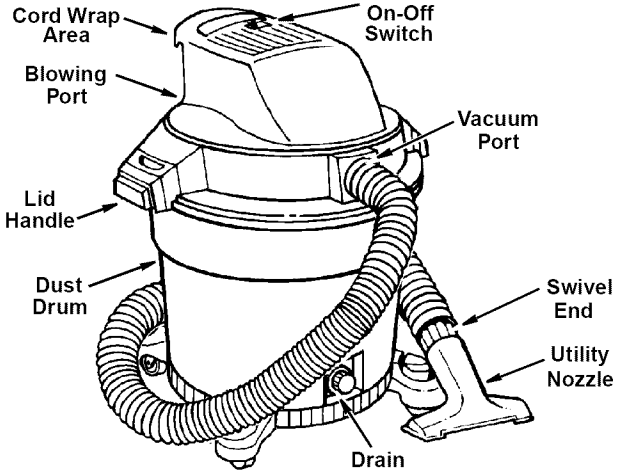

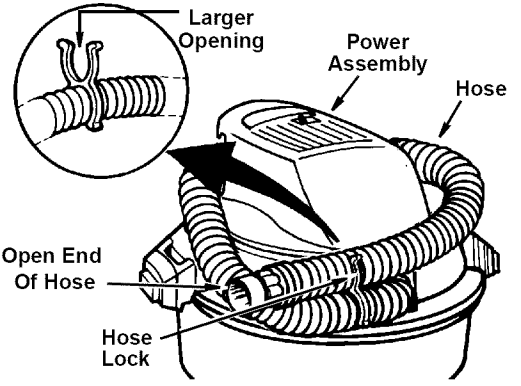

To Store Your Accessories

1. Slide extension handles and accessories into the slotted areas of the caster feet for storage.
2. To remove the accessories, lightly rotate and pull upward.

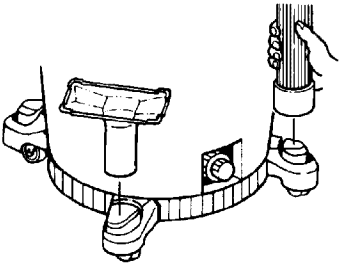

Operation

WARNING

To reduce the risk of fire or explosion, do not operate this vac in areas with flammable gases, vapors or explosive dust in the air. Flammable gases or vapors include but are not limited to; lighter fluid, solvent type cleaners, oil-base paints, gasoline, alcohol or aerosol sprays. Explosive dusts include but are not limited to; coal, magnesium, grain or gun powder. Do not vacuum explosive dust, flammable or combustible liquids or hot ashes. Do not use this vac as a sprayer. To reduce the risk of health hazards from vapors or dusts, do not vacuum toxic materials.

CAUTION: To reduce risk of hearing damage wear ear protectors when using the vac for extended hours or when using it in a noisy area. The operation of any utility vac can result in foreign objects being blown into the eyes, which can result in severe eye damage. Always wear safety goggles complying with ANSI Z87.1 (shown on Package) before commencing operation. Safety Goggles are available at Sears retail stores.

To reduce the risk of electric shock, this appliance has a polarized plug (one blade is wider than the other). This plug will fit in a polarized outlet only one way. If the plug does not fit fully in the outlet, reverse the plug. If it still does not fit, contact a qualified electrician to install the proper outlet. Do not change the plug in any way.

After you plug the power cord into the outlet, turn the unit on by pushing the switch from position "O" to position "I". The symbols used on the motor cover are international "On & Off" symbols. "O" is the symbol for "OFF" and "I" is the symbol for "ON".

O = OFF | = ON

Vacuuming Dry Materials

1. The filter must always be in correct position to avoid leaks and possible damage to vac.
2. When using your vac to pick up very fine dust, it will be necessary for you to empty the drum and clean the filter at more frequent intervals to maintain peak vac performance.

NOTE: A dry filter is necessary to pick up dry material. If you use your vac to pick up dust when the filter is wet, the filter will clog quickly and be very difficult to clean.

3. If your filter is wet but you need to use the vac to pick up dry material, you can quickly dry the filter by running the vac without hose attached for about 10 minutes. The clean air rushing through the vac will help dry the filter.

NOTE: The optional Craftsman Fine Particle Filter, stock number 9-17916 will do a better job stopping the very fine particles than the 9-17816 filter. This filter will stop 99.99% of all particles as small as .75 micron.

Vacuuming Liquids

1. When picking up small amounts of liquid the filter may be left in place.
2. When picking up large amounts of liquid we recommend that the filter be removed. If the filter is not removed, it will become saturated and misting may appear in the exhaust.
3. After using the vac to pick up liquids, the filter must be dried to avoid possible mildew and damage to the filter.
4. When the liquid in the drum reaches a predetermined level, the float mechanism will rise automatically to cut off airflow. When this happens, turn off the vac, unplug the power cord, and empty the drum. You will know that the float has risen because vac airflow ceases and the motor noise will become higher in pitch, due to increased motor speed.

IMPORTANT: To avoid damage to the vac do not run motor with float in raised position.

Emptying the Drum

WARNING: To reduce the risk of injury from accidental starting, unplug power cord before emptying the drum.

1. The vac comes equipped with a drain for easy emptying of liquids. Simply unscrew the drain cap and lift the opposite side slightly to empty the drum.
2. Another option is to remove the power assembly. Pull the flexible latches outward on each side of the lid to release from the drum.
3. While holding the latches out, lift the power assembly up and away from the drum.
4. Lay power assembly upside down on a clean area while emptying drum.
5. Dump the drum contents into the proper waste disposal container.

WARNING: To reduce the risk of back injury or falls, do not lift a vac heavy with liquid or debris. Scoop or drain enough contents out to make the vac light enough to lift comfortably.

Cord Wrap/Carry Handle

The wet/dry vac has a convenient cord wrap area/carry handle designed on the rear of the vac. Simply, wrap the power cord around the handle and snap the connector on the plug to a wrap of the cord and the cord is wrapped for storage.

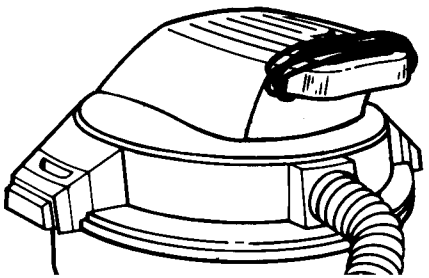

Moving the Vac

1. Should it become necessary to pick the vac up to move it, DO NOT pick the vac up by the lid handles unless dust drum is empty. To avoid dropping the vac due to latches releasing or possible part breakage, pick the vac up by the lip of the dust drum.

Blowing Feature

Your vac features "Full Blowing". It can blow sawdust and other debris. Follow the steps below to use your vac as a blower.

WARNING: Always wear safety goggles complying with ANSI Z87.1 before using as a blower.

WARNING: To reduce the risk of injury to bystanders, keep them clear of blowing debris.

1. Locate blowing port of your vac.
2. Insert soft end of your hose into blowing port.
3. (Optional) Attach extension wand to swivel end of hose, then place a blower nozzle on the wand.
4. Turn vac on and you are ready to use your vac as a blower.

Sears recommended accessories are available at Sears retail stores. The Sears Blower Nozzle Stock No. 9-16933 and extension handles Stock No. 9-16964 are recommended for blowing debris.

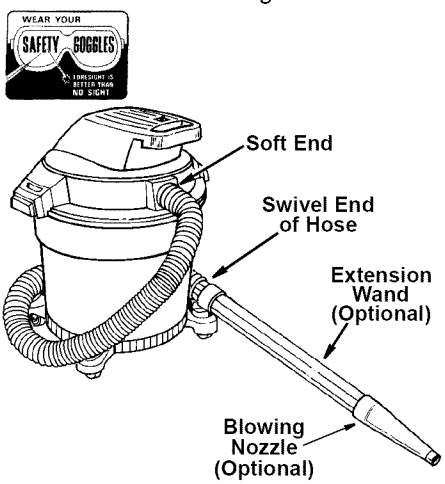

Maintenance

Filter

WARNING: To reduce the risk of injury from accidental starting, unplug power cord before changing or cleaning filter.

NOTE: This filter is made of high quality paper designed to stop very small particles of dust. The filter can be used for wet or dry pick up. Handle the filter carefully when removing to clean or installing it. Creases in the filter pleats may occur from installation but creases will not affect the performance of the filter.

Cleaning

Your filter should be cleaned often to maintain peak vac performance.

Be sure to dry the filter before storing or picking up dry debris.

IMPORTANT: After cleaning, check the filter for tears or small holes. Do not use a filter with holes or tears in it. Even a small hole can cause a lot of dust to come out of your vac. Replace it immediately.

Removal

To remove the filter for cleaning or replacement, unscrew the filter nut from the filter cage, remove filter plate and lift off filter.

WARNING: Do not remove the filter cage. It is there to help prevent your fingers from getting into the blower wheel.

IMPORTANT: To avoid damage to the blower wheel and motor, always reinstall the filter before using the vac for dry material pickup.

Dry Filter

1. Some removal of dry debris can be accomplished without removing the filter from the vac. Slap your hand on top of the power assembly while the vac is turned off.
2. For best cleaning results due to accumulated dust, clean the filter in an open area. Cleaning SHOULD be done outdoors and not in the living quarters.
3. After filter removal from vac, remove the dry debris by gently tapping the filter against the inside wall of your dust drum. The debris will loosen and fall.
4. For thorough cleaning of dry filter with fine dust (no debris), run water through it as described under "Wet Filter".

Wet Filter

After filter is removed, run water through the filter from a hose or spigot. Take care that water pressure from the hose is not strong enough to damage filter. Remember: To dry a filter quickly, reinstall the filter on the vac and allow the unit to run for approximately 10 minutes. The clean air rushing through the filter will dry it.

Installation

Refer to page 5, "Filter Assembly".

Allow the filter to dry before storing the vac.

Wet/Dry Vac

To keep your Wet/Dry Vac looking its best, clean the outside with a cloth dampened with warm water and mild soap.

To clean the drum:

1. Dump debris out.
2. Wash drum thoroughly with warm water and mild soap.
3. Wipe out with dry cloth.

WARNING: To assure product SAFETY and RELIABILITY, repairs and adjustment should be performed by Sears Service Centers, always using Sears replacement parts.

NOTE: If your casters are noisy, you may put a drop of oil on the roller shaft to make them quieter.

Wet Nozzle

To pick up liquids off a smooth surface, use the 2-1/2" wet nozzle accessory supplied with your wet/dry vac. To use this nozzle, simply attach the nozzle to the end of an extension wand.

Connect a second extension wand to the first, and connect the 2-1/2" x 7' hose to the extension wand.

Liquids may be picked up by dragging the nozzle across the surface. The squeegee will dry the surface as you vacuum.

Replacement rubber for the squeegee nozzle may be obtained through Sears Parts. If the rubber becomes worn, it may be flipped over for use on the opposite side or replaced. (Replacement service part #822256). To reverse or replace the squeegee:

1. Lay the wet nozzle on a flat surface with the round inlet opening facing up and the two latches close to you as shown.

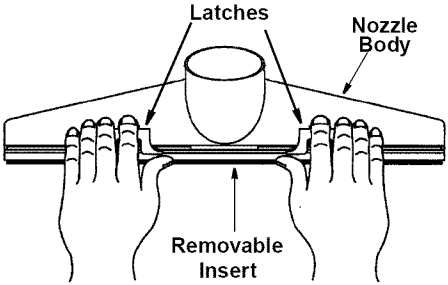

2. Using both hands, position each thumb on the removable insert, (below the latches) and two fingers of each hand on each latch, lift and disengage the two latches from the tabs on the nozzle body.
3. Gently pull the latches toward yourself to remove the insert.

To reinstall the removable insert correctly, follow these steps:

1. Place the removable insert on a flat surface with the pins positioned upward and the latches close to you as shown. Place the rubber squeegee on the insert, with the pins fitting through the matching holes in the squeegee. (Make sure the new working edge is located farthest from you.)



2. Using both hands, lower the nozzle body onto the insert and squeegee with the round opening of the nozzle closest to you. With fingers on the far side and thumbs holding the latches of the removable insert, flip the nozzle over so the latches are on the top and the round inlet opening is facing away from you. Make sure the squeegee stays on the insert pins.

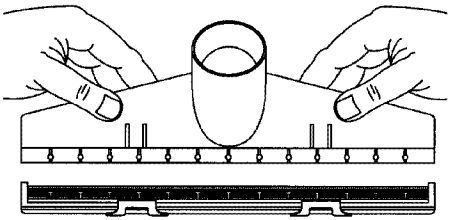

3. Press down with each thumb below the latching tabs until you see and hear the removable insert snap into the nozzle body. Snap the latches over the locking tabs into their original position.

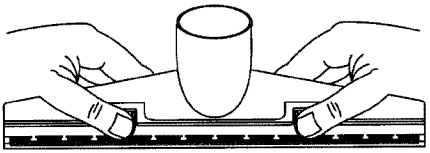

4. Inspect the pins of the insert to make sure they fit through the holes of the squeegee and fit into the matching slots in the nozzle body.

   NOTE: If the pins are out of position, hold the nozzle assembly with both hands and gently twist in opposite directions. The insert pins should snap into proper position.

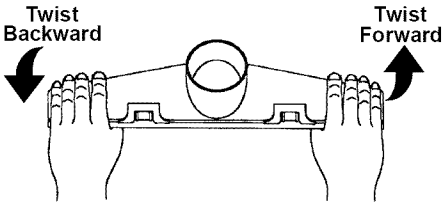

The wet nozzle assembly is ready for wet pickup use.

Repair Parts

12 Gallon Wet/Dry Vac
Model Number 113.177825

Always order by Part Number - Not by Key Number

WARNING

SERVICING OF DOUBLE-INSULATED WET/DRY VAC

In a double-insulated Wet/Dry Vac, two systems of insulation are provided instead of grounding. No grounding means is provided on a double-insulated appliance, nor should a means for grounding be added. Servicing a double-insulated Wet/Dry Vac requires extreme care and knowledge of the system, and should be done only by qualified service personnel. Replacement parts for a double-insulated Wet/Dry Vac must be identical to the parts they replace. Your double-insulated Wet/Dry Vac is marked with the words "DOUBLE INSULATED" and the symbol ⧈ (square within a square) may also be marked on the appliance.

Key No.	Part No.	Description
1	73180	Toggle Switch
2	824941	Motor Cover
3	823687-2	Cord w/plug
4	824967	Motor (Includes Key No's 7,thru 10)
5	STD611007	* Screw, Pan Hd. Ty "AB" 10x3/4
6	818793	Lid Gasket
7	818961	Spacer
8	818413-2	Blower Wheel
9	15534-1	Washer
10	73316	Nut, Hex Flange 1/4-20
11	823683-4	Lid
12	509238	Float/Filter Cage
13	9-17816	† Filter (Red Stripe)
14	9-16937	† Filter Plate
15	9-16938	† Filter Nut
16	73332	Dust Drum
17	73185	Drain Cap
18	9-16990	† Caster Foot w/Storage
19	73102	Casters
20	9-17820	† Hose 2-1/2" x 7'
—	822256	Squeegee (Not Illustrated)
—	SP6113	Owners Manual (Not illustrated)

† Stock Item - May Be Secured Through The Hardware Department Of Most Sears Retail Stores

* Standard Hardware Item - May Be Purchased Locally.

Repair Parts

12 Gallon Wet/Dry Vac
Model Number 113.177825

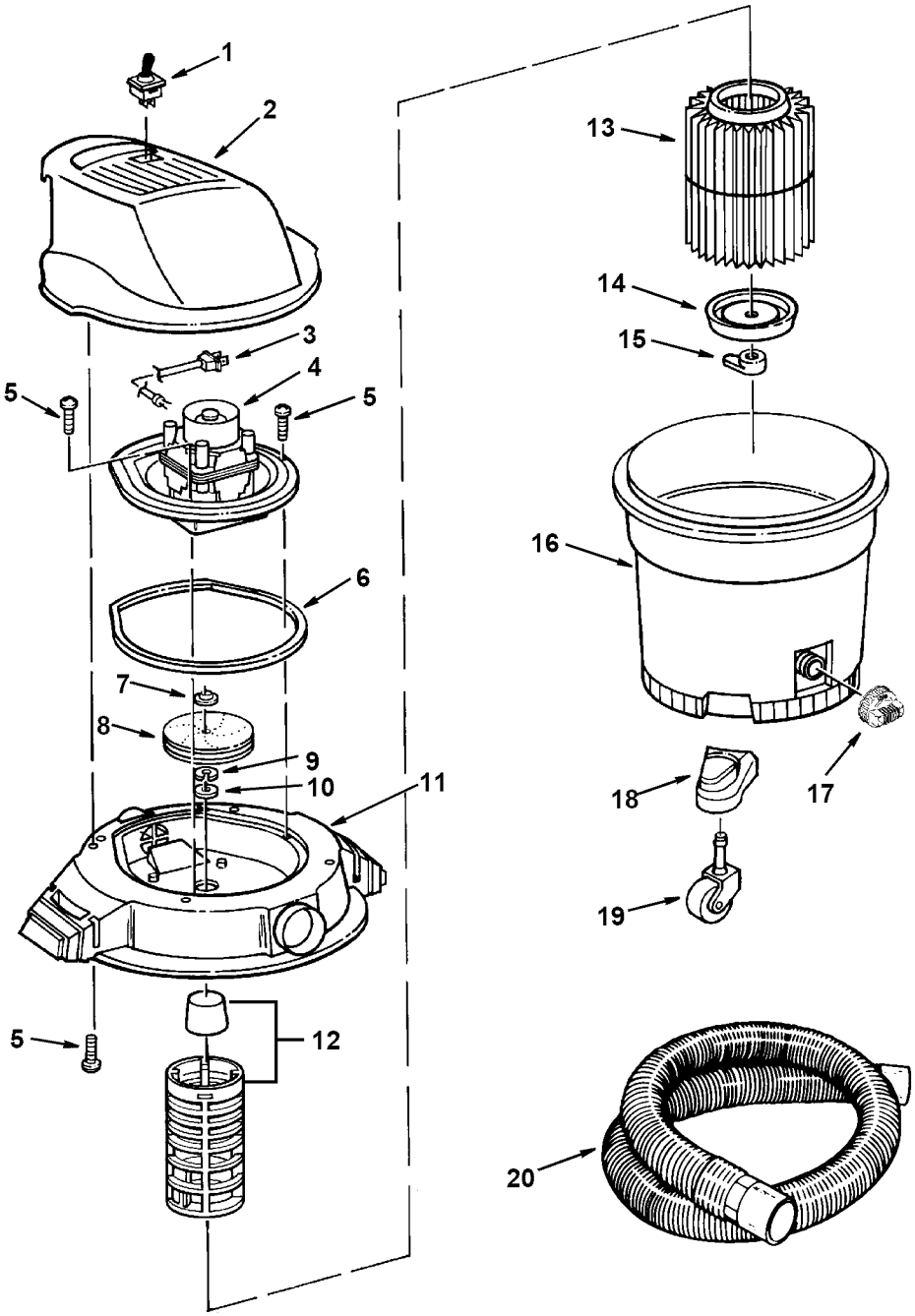

CRAFTSMAN®

Accessories and Attachments

Get more versatility from your Craftsman wet/dry vacuum by adding these accessories.

Additional wet/dry vac accessories may be purchased at your local Sears retail store or Sears/Craftsman Power and Hand Tool Catalog.

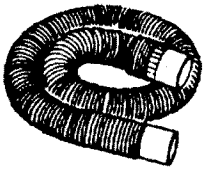

17820 2-1/2"x7' Hose



16964 Extension Wands



16931/16990 Caster Feet for Storage

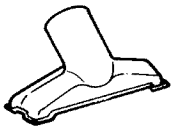

16922 Utility Nozzle

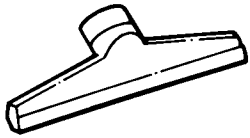

17817 Wet Nozzle

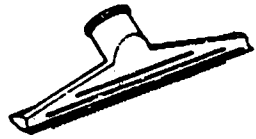

16925 Dry Nozzle

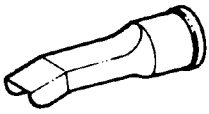

16978 Car Nozzle

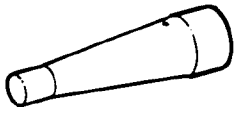

16933 Blower Nozzle



16902 Crevice Tool



16915 Multipurpose Floor Tool

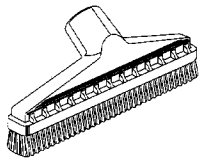

16926 14" Floor Brush



16901 Dusting Brush

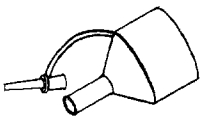

16947, 16948 Inflator Nozzle

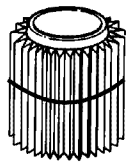

17816 Paper Pleated Filter



16939 & 16940 Drum Liners

NOTE: Most Accessories Are Available In 2-1/2 Inch And 1-1/4 Inch Sizes

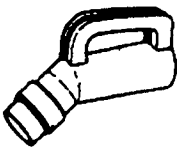

16934 Hose Grip



16917 Hose Joiner

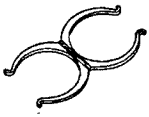

16930 Hose Lock



16935 Gutter Nozzle

Sawdust Collection Series

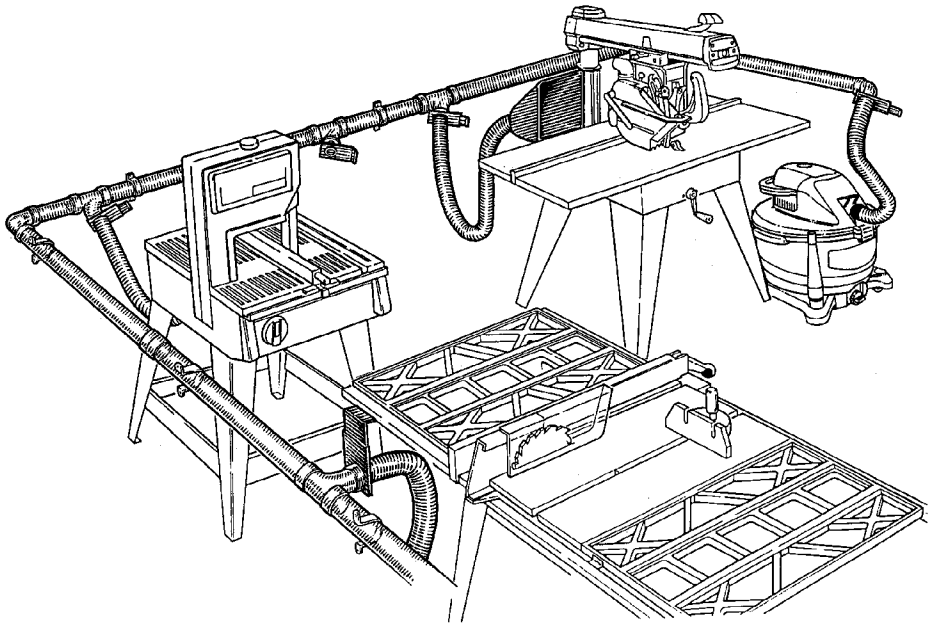

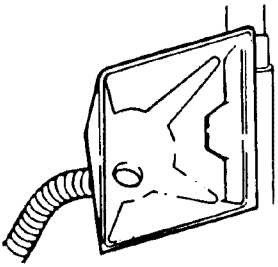

Radial Arm Saw
Dust Collection Kit
29963

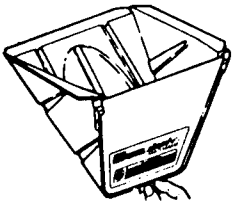

Table Saw Dust
Collection Kit
29962

For the repair or replacement parts you need
Call 7 am - 7 pm, 7 days a week
1-800-366-PART
(1-800-366-7278)

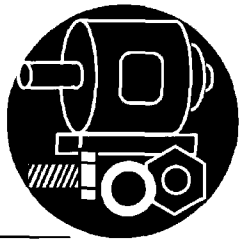

For in-home major brand repair service
Call 24 hours a day, 7 days a week
1-800-4-REPAIR
(1-800-473-7247)



For the location of a Sears Repair Service Center in your area
Call 24 hours a day, 7 days a week
1-800-488-1222

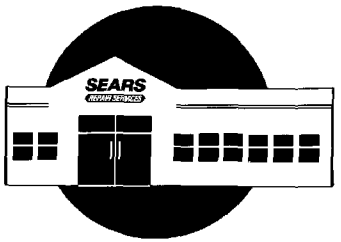

For information on purchasing a Sears Maintenance Agreement or to inquire about an existing Agreement
Call 9 am - 5 pm, Monday-Saturday
1-800-827-6655



SEARS
REPAIR SERVICES
America's Repair Specialists

The model and serial numbers will be found on the handle.

When requesting service or ordering parts, always provide the following information:

- **Product Type**
- **Part Number**
- **Model Number**
- **Part Description**

©1999 Emerson Electric Co.

Sears, Roebuck and Co., Chicago, IL. 60179 U.S.A.

Part No. SP6113 Form No. SP6113-1 Printed in Canada 10/00