Save This Manual
for Future Reference

SEARS

owner's manual

MODEL NO.

113.177311
12 Gallon

113.177331
16 Gallon

Serial
Number _____
Model and serial numbers may be found on the handle. You should record both model and serial numbers in a safe place for future use.

FOR YOUR SAFETY

READ ALL INSTRUCTIONS CAREFULLY

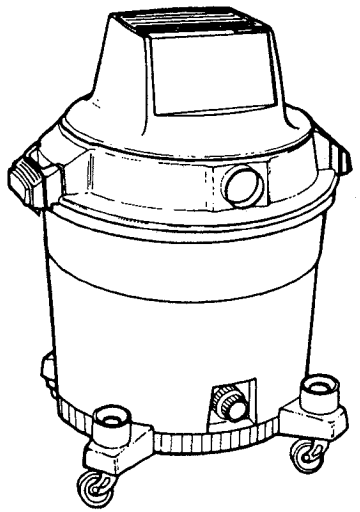

SEARS/CRAFTSMAN

12 or 16 GALLON FULL BLOWING WET/DRY VAC

- assembly
- operating
- repair parts

Sears, Roebuck and Co., Hoffman Estates, IL. 60179 U.S.A.

Part No. SP5535

Printed in U.S.A.

FULL ONE YEAR WARRANTY ON CRAFTSMAN WET/DRY VACS

If within one year from the date of purchase, this Craftsman Wet/Dry Vac fails due to a defect in material or workmanship, Sears will repair it, free of charge.

If this Craftsman Wet/Dry Vac is used for commercial or rental purposes, this warranty coverage applies for only 90 days from date of purchase.

Warranty Service is available by simply contacting the nearest Sears Service Center/Department throughout the United States.
This warranty applies only while this product is used in the United States.

This warranty gives you specific legal rights, and you may also have other rights which vary from state to state.

Sears, Roebuck and Co., D817 WA,Hoffman Estates, IL. 60179

IMPORTANT SAFETY INSTRUCTIONS

Safety Signal Words

DANGER: means if the safety information is not followed someone **will** be seriously injured or killed.

WARNING: means if the safety information is not followed someone **could** be seriously injured or killed.

CAUTION: means if the safety information is not followed someone **might** be injured.

When using your Wet/Dry Vac, follow basic safety precautions including the following.

WARNING - To reduce the risk of fire, electric shock, or injury:

Read and understand this owner's manual and all labels on the Wet/Dry Vac before operating. Use only as described in this manual. To avoid personal injury or damage to Wet/Dry Vac, use only Sears Craftsman recommended accessories.
Sparks inside the motor can ignite flammable vapors or dust. To avoid fire or explosion:

- Do not vacuum, or use this Wet/Dry Vac near, flammable or combustible liquids, gases, or explosive dusts like gasoline or other fuels, lighter fluid, cleaners, oil- based paints, natural gas, hydrogen, coal dust, magnesium dust, grain dust, or gun powder.
- Do not use Wet/Dry Vac as a sprayer for any flammable or combustible liquid.

Do not vacuum anything that is burning or smoking, such as cigarettes, matches, or hot ashes.
To avoid health hazards from vapors or dusts, do not vacuum toxic materials.
Do not use or store near hazardous materials.
To avoid electric shock, do not expose to rain. Store indoors.
Do not allow to be used as a toy. Close attention is necessary when used by or near children.
Do not use this Wet/Dry Vac with a torn filter or without the filter installed except for vacuuming liquids as described in the operation section of this manual.
Do not leave Wet/Dry Vac when plugged in. Unplug from outlet when not in use and before servicing. Turn off Wet/Dry Vac before unplugging.
To avoid injury from accidental starting, unplug power cord before changing or cleaning filter.
Do not unplug by pulling on cord. To unplug, grasp the plug, not the cord.
Do not use with damaged cord, plug or other parts. If your Wet/Dry Vac is not working as it should, has missing parts, has been dropped, damaged, left outdoors, or dropped into water, return it to a Sears Service Center.
Do not pull or carry by cord, use cord as handle, close a door on cord, or pull cord around sharp edges or corners. Do not run Wet/Dry Vac over cord. Keep cord away from heated surfaces.
Do not handle plug or the Wet/Dry Vac with wet hands.
Do not put any object into ventilation openings. Do not vacuum with any ventilation openings blocked; keep free of dust, lint, hair or anything that may reduce air flow.
Keep hair, loose clothing, fingers, and all parts of body away from openings and moving parts.
To avoid falls, use extra care when cleaning on stairs.

This Wet/Dry Vac is double-insulated, eliminating the need for a separate grounding system. Use only identical replacement parts. Read the instructions for Servicing Double-Insulated Wet/Dry Vacs before servicing.
Extension cords in poor condition or that are too small can pose fire and shock hazards. When using an extension cord, be sure it is in good condition. Using any extension cord will cause some loss of power. To keep the loss to a minimum, use the following table to choose the minimum wire size extension cord.

Extension Cord Length	Wire Size
0-50 feet	No. 14
50-100 feet	No. 12

Observe the following warnings that appear on the motor housing of your Wet/Dry Vac.



DOUBLE INSULATED, GROUNDING NOT REQUIRED. WHEN SERVICING USE ONLY IDENTICAL REPLACEMENT PARTS.

WARNING: To avoid electric shock- do not expose to rain-store indoors.

WARNING: For your own safety, read and understand owner's manual. Do not pick up hot ashes, coals, toxic, flammable or other hazardous materials. Do not use around explosive liquids or vapors.

SAVE THESE INSTRUCTIONS

The operation of any utility vac can result in foreign objects being blown into the eyes, which can result in severe eye damage. Always wear safety goggles complying with ANSI Z87.1 (shown on package) before commencing operation. Safety Goggles are available at Sears retail stores.
To avoid hearing damage, wear ear protectors when using the vac for extended hours or when, using it in a noisy area.



Introduction

This Wet/Dry Vac is intended for either commercial or household use.

IMPORTANT NOTE
Please Read Carefully

Static Shocks Are Common - In dry areas or when the relative humidity of the air is low. To reduce the frequency of static shocks in your home the best remedy is to add moisture to the air with a console humidifier.

Owner's Manual Contents

Item	Page
Warranty Information	2
Safety Instructions	2
Introduction	4
Unpacking and Checking Carton Contents	4
Assembly	4
Operation	7
Maintenance	9
Repair Parts	10

Unpacking and Checking Carton Contents

Remove entire contents of carton. Check each item against the Carton Contents List. Notify your Sears Store immediately if any parts are damaged or missing.

Carton Contents List

Key	Description	Qty.
A	Vac Assembly	1
B	Hose Assembly	1
C	Utility Nozzle	1
*D	Caster Foot with Storage	4
E	Caster	4
F	Owners Manual	1
G	Filter Cage	1
H	Filter (Red Stripe)	1
I	Float	1
J	Filter Plate	1
K	Filter Nut	1

*Some models provided with caster feet.

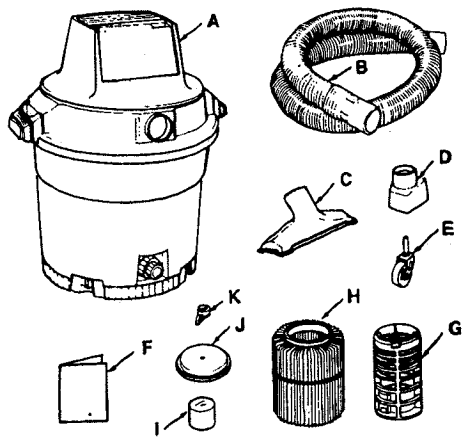

Caster/Caster Foot Assembly

1. Turn the dust drum upside down on the floor.
2. Insert the caster feet into the bottom of drum, as shown (4 places).
3. Push on the caster foot until the foot is flush with bottom of the dust drum.
4. Insert the caster stem into the socket of the caster foot, as shown (4 places).
5. Push on the caster until the ball on the caster stem is inserted all the way into the socket. You will be able to hear the ball snap into the socket and the caster will swivel easily when positioning is correct.
6. Turn the drum upright.

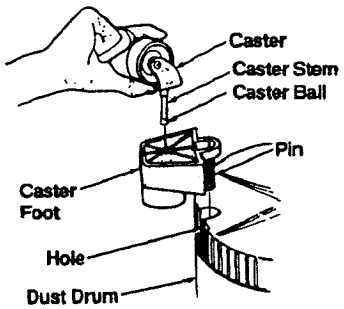

Float/Cage Assembly

WARNING: For your own safety, never connect plug to power source outlet until all assembly steps are complete and you have read and understood the safety and operation instructions. Do not operate vac with any parts damaged or missing.

1. Place the lid assembly of vac upside down into the drum or on a clean smooth surface.
2. Locate the float. Place the float over the opening in the center of the lid with the words "This Side Towards Lid" laying face down over the hole.

WARNING: To avoid personal injury or damage to vac be sure to keep hands, fingers, or any other foreign objects out of the center opening when assembling the float.

3. Line up filter cage tabs with the slots in the center ring of the lid assembly.
4. Push on the filter cage until the tabs snap into the slots for a secure fit.

NOTE: If filter cage needs to be removed, because the float is placed in the wrong way, use a slotted screwdriver and insert the blade near one of the tabs between the filter cage and the center ring of the lid. Pry the tab out of the slot. Tilt the cage and lift away from the lid. To replace, follow float/cage assembly instructions.

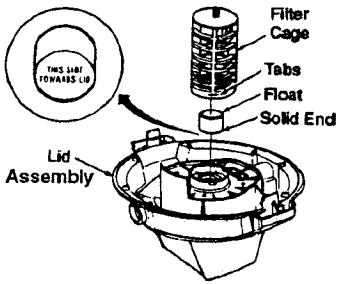

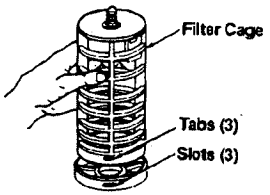

Filter Assembly

1. Carefully slide the filter over the filter cage, sliding it over the center ring covering the 3 slots until the filter stops against the lid.
2. Place the hole in the filter plate over threaded screw of the filter cage.
3. Gently push on the filter plate to seat the rubber ring of the filter inside the circular channel of the filter plate.
4. Place filter nut onto threaded screw and tighten it down. Finger tighten only.

NOTE: Lever of filter nut should be away from plate as shown.

IMPORTANT: Do not overtighten as this may deform or crack the filter plate or filter cage.

NOTE: Your filter has a red stripe that matches an in-store displayer. When you visit your local Sears store, just remember the color of your stripe for the correct size filter.

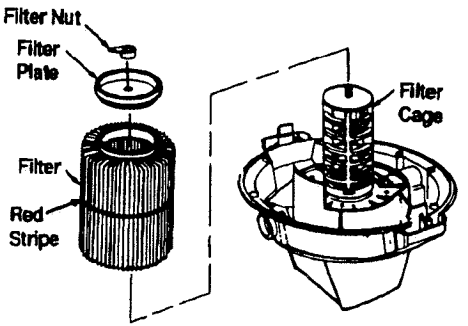

Vac Assembly

1. Line up vacuum port in top assembly with drain cap located on the front of the drum.
2. Place lid on top of drum with the handles snug against the drum channel.
3. Be sure lid completely covers the top of the drum so leakage does not occur.
4. Push down on top of the handles to cause the flexible locking tabs to hook onto the drum lip of the channel.
5. Make sure that the locking tabs are snapped in place to prevent the lid from coming off. (See inset below.)
6. Insert the flexible plastic end of the hose, which is opposite the swivel end, into the vacuum port directly above the drain.
7. Place the utility nozzle securely on the swivel end of the hose and the vac is ready for use.

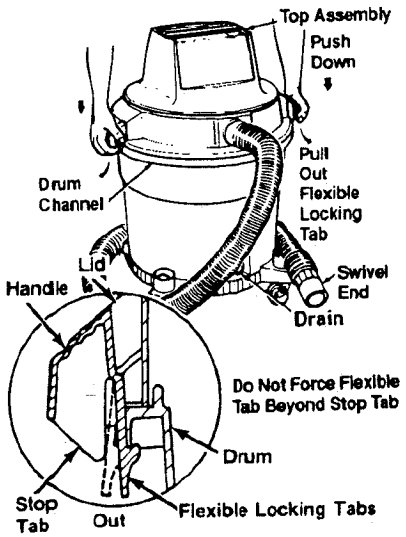

NOTE: The swivel end of the hose is removable if more hoses need to be attached for more length from the vac. To remove the swivel portion of the hose, grasp the hose swivel and firmly pull it out of the flexible hose. Connect the soft end of a second hose (accessory #9-17820) into the swivel end of the original hose by forcing the sections together until they fit tightly.

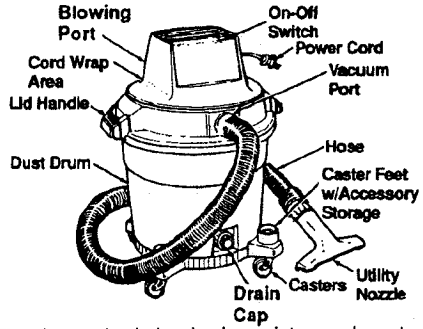

The hose lock is designed to make storage of your vac more convenient. Simply wrap hose around power head, and attach as illustrated. Larger opening should be toward open end of hose for easy release. **NOTE:** Hose lock not provided on all models.

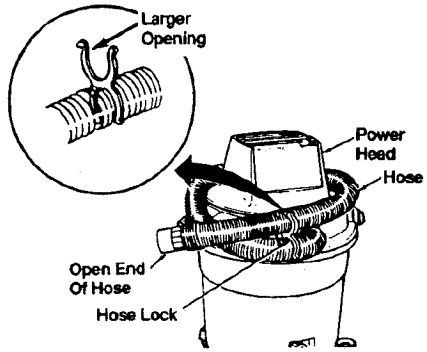

To Store Your Accessories

1. Slide extension handles and accessories over the rings on the caster feet. 1-1/4" accessories fit over the inner ring, and the 2-1/2" accessories fit over the outer ring.
2. To remove handles and accessories, lightly rotate and pull upward.

NOTE: Not provided on all models.

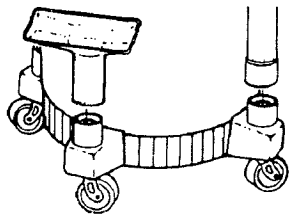

Operation

WARNING

To avoid fire or explosion, do not operate this vac in areas with flammable gases or flammable vapors such as lighter fluid, cleaners, oil-base paints, gasoline, alcohol or explosive dust such as coal, magnesium, grain or gun powder in the air. Do not vacuum explosive dust, flammable or combustible liquids or hot ashes. Do not use this vac as a sprayer for any flammable or combustible liquid. To avoid health hazards from vapors or dusts, do not vacuum toxic materials. To avoid electrical shock do not expose to rain. Store vac indoors. Unplug power cord before changing or cleaning filter or emptying the dust drum.

CAUTION: To reduce the risk of hearing damage wear ear protectors when using the vac for extended hours or when using it in a noisy area. The operation of any utility vac can result in foreign objects being blown into the eyes, which can result in severe eye damage. Always wear safety goggles complying with ANSI Z87.1 (shown on Package) before commencing operation. Safety Goggles are available at Sears retail stores.

To reduce the risk of electric shock, this appliance has a polarized plug (one blade is wider than the other). This plug will fit in a polarized outlet only one way. If the plug does not fit fully in the outlet, reverse the plug. If it still does not fit, contact a qualified electrician to install the proper outlet. Do not change the plug in any way.

Vacuuming Dry Materials

1. The filter must be in correct position at all times to avoid leaks and possible damage to vac.
2. When using your vac to pick up very fine dust, it will be necessary for you to empty the drum and clean the filter at more frequent intervals to maintain peak vac performance.

NOTE: A dry filter is necessary to pick up dry material. If you use your vac to pick up dust when the filter is wet, the filter will clog quickly and be very difficult to clean.

3. If your filter is wet but you need to use the vac to pick up dry material, you can quickly dry the filter by running the vac without hose attached for about 10 minutes. The clean air rushing through the vac will help dry the filter.

Vacuuming Liquids

1. When picking up small amounts of liquid the filter may be left in place.
2. When picking up large amounts of liquid we recommend that the filter be removed. If the filter is not removed, it will become saturated and misting may appear in the exhaust.
3. After using the vac to pick up liquids, the filter must be dried to avoid possible mildew and damage to the filter.
4. When the liquid in the drum reaches a predetermined level, the float mechanism will rise automatically to cut off air-flow. When this happens, turn off the vac, unplug the power cord, and empty the drum. You will know that the float has risen because vac airflow ceases and the motor noise will become higher in pitch, due to increased motor speed.

IMPORTANT: To avoid damage to the vac do not run motor with float in raised position.

Emptying Dust Drum

WARNING: To avoid injury from accidental starting, unplug power cord before emptying the drum.

1. To remove lid to empty contents of drum, simply pull the flexible latches outward on each side of the lid to release from the drum.
2. While holding the latches out, lift the top assembly up and away from the drum.
3. Lay top assembly upside down on a clean area while emptying drum or changing filter.
4. Dump the drum contents into the proper waste disposal container.
5. Another option is to use the drain provided in the drum for easy emptying of liquids. Simply unscrew the drain cap and tilt the drum in a manner so the liquid flows out the drain hole.

WARNING: To avoid back injury or falls, do not lift a vac heavy with liquid or debris. Scoop or drain enough contents out to make the vac light enough to lift comfortably.

Cord Wrap

When vacuuming is complete, unplug the cord and wrap it around the motor cover.

Moving the Vac

Should it become necessary to pick the vac up to move it, DO NOT pick the vac up by the lid handles. To avoid dropping the vac due to latches releasing, or possible part breakage, pick up the vac by the lip of the dust drum.

Blowing Feature

Your vac features "Full Blowing". It has the capability to blow sawdust and other debris. Follow the steps below to use your vac as a blower.

WARNING: Always wear safety goggles complying with ANSI Z87.1 before using as a blower.

WARNING: To avoid injury to bystanders, keep them clear of blowing debris.

1. Locate blowing port of your vac.
2. Insert soft end of your hose into blowing port.
3. (Optional) Attach extension wand to swivel end of hose, then place a blower nozzle on the wand.
4. Turn vac on and you are ready to use your vac as a blower.

Sears recommended accessories are available at Sears retail stores. The Sears Blower Nozzle Stock No. 9-16933 and extension handles Stock No. 9-16964 are recommended for blowing debris.

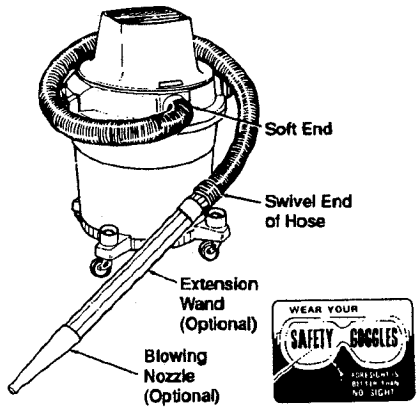

Filter Maintenance

WARNING: To avoid injury from accidental starting, unplug power cord before changing or cleaning filter.

Cleaning

Your filter should be cleaned often to maintain peak vac performance.
Be sure to dry the filter before storing or picking up dry debris.

NOTE: This filter is made of high quality paper designed to stop very small particles of dust. The filter can be used for wet or dry pick up. Handle the filter carefully when removing to clean or installing it. Creases in the filter pleats may occur from installation but creases will not affect the performance of the filter.

Removal

To remove the filter for cleaning or replacement, remove filter nut from the screw on the filter cage, remove filter plate and lift off filter.

IMPORTANT: To avoid damage to the blower wheel and motor, always reinstall the filter before using the vac for dry material pick-up.

WARNING: Do not remove the filter cage. It is there to help prevent your fingers from getting into the blower wheel.

Dry Filter

1. Some removal of dry debris can be accomplished without removing the filter from the vac by slapping your hand on top of the lid while the vac is turned off.
2. For best results of cleaning due to accumulated dust, clean the filter in an open area. Cleaning SHOULD be done outdoors and not in the living quarters.
3. After filter removal from vac, remove the dry debris by gently tapping the filter against the inside wall of your dust drum and the debris will loosen and fall.
4. For thorough cleaning of dry filter with fine dust (no debris) you may run water through it as described under "Wet Filter".

Wet Filter

After filter is removed, a wet filter should be cleaned by running water through it from a hose or spigot. Take care that water pressure from the hose is not strong enough to damage filter.

IMPORTANT: After cleaning, check the filter for tears or small holes. Do not use a filter with holes or tears in it. Even a small hole can cause a lot of dust to come out of your vac. Replace it immediately.

Installation

Refer to page 5, "Filter Assembly".
Allow the filter to dry before re-installing and storing the vac.

Wet/Dry Vac Maintenance

To keep your Wet/Dry Vac looking its best, clean the outside with a cloth dampened with warm water and mild soap.

To clean the drum:

1. Dump debris out.
2. Wash drum thoroughly.
3. Wipe out with dry cloth.

WARNING: To assure product SAFETY and RELIABILITY, repairs and adjustment should be performed by Sears Service Centers, always using Sears replacement parts.

NOTE: If your casters are noisy, you may put a drop of oil on the roller shaft to make them quieter.

Repair Parts

12 or 16-GALLON WET/DRY VACS
Always order by Part Number - Not by Key Number
Model Numbers 113.177311 & 113.177331

WARNING
SERVICING OF DOUBLE-INSULATED WET/DRY VAC

In a double-insulated Wet/Dry Vac, two systems of insulation are provided instead of grounding. No grounding means is provided on a double-insulated appliance, nor should a means for grounding be added. Servicing a double-insulated Wet/Dry Vac requires extreme care and knowledge of the system, and should be done only by qualified service personnel. Replacement parts for a double-insulated Wet/Dry Vac must be identical to the parts they replace. Your double-insulated Wet/Dry Vac is marked with the words "DOUBLE INSULATED" and the symbol ⧈ (square within a square) may also be marked on the appliances.

Key No.	12 Gallon 113.177311 Part No.	16 Gallon 113.177331 Part No.	Description
1	73180	73180	Toggle Switch
2	818806	818806	Motor Cover
3	818802-1	818802-1	Motor (Includes Key No's 8,9,10 &11)
4	820506	820506	Motor Gasket
5	STD611007	STD611007	* Screw, Pan Hd. Ty "AB" 10x3/4
6	820505	820505	Collector
7	818793	818793	Lid Gasket
8	818961	818961	Spacer
9	818413-2	818413-2	Blower Wheel
10	15534-1	15534-1	Washer
11	73352	73352	Nut, Hex Flange 1/4-20
12	819451-4	819450-4	Lid
13	9-17816	9-17816	† Filter (Red Stripe)
14	73317	73317	Filter Plate
15	73316	73316	Filter Nut
16	73164	73164	Caster Foot
17	-----	9-16931	† Caster Foot with Storage
18	73102	73102	Caster
19	73185	73185	Drain Cap
20	9-16922	9-16922	† Utility Nozzle
21	73324	73324	Hose Swivel
22	9-17820	9-17820	† Hose (Includes Key No. 20)
23	73362	73362	Filter Cage
24	73349	73349	Float
25	814567	809544-3	Dust Drum
-	SP5535	SP5535	Owners Manual

† Stock Item - May Be Secured Through The Hardware Department Of Most Sears Retail Stores
* Standard Hardware Item - May Be Purchased Locally.

Repair Parts

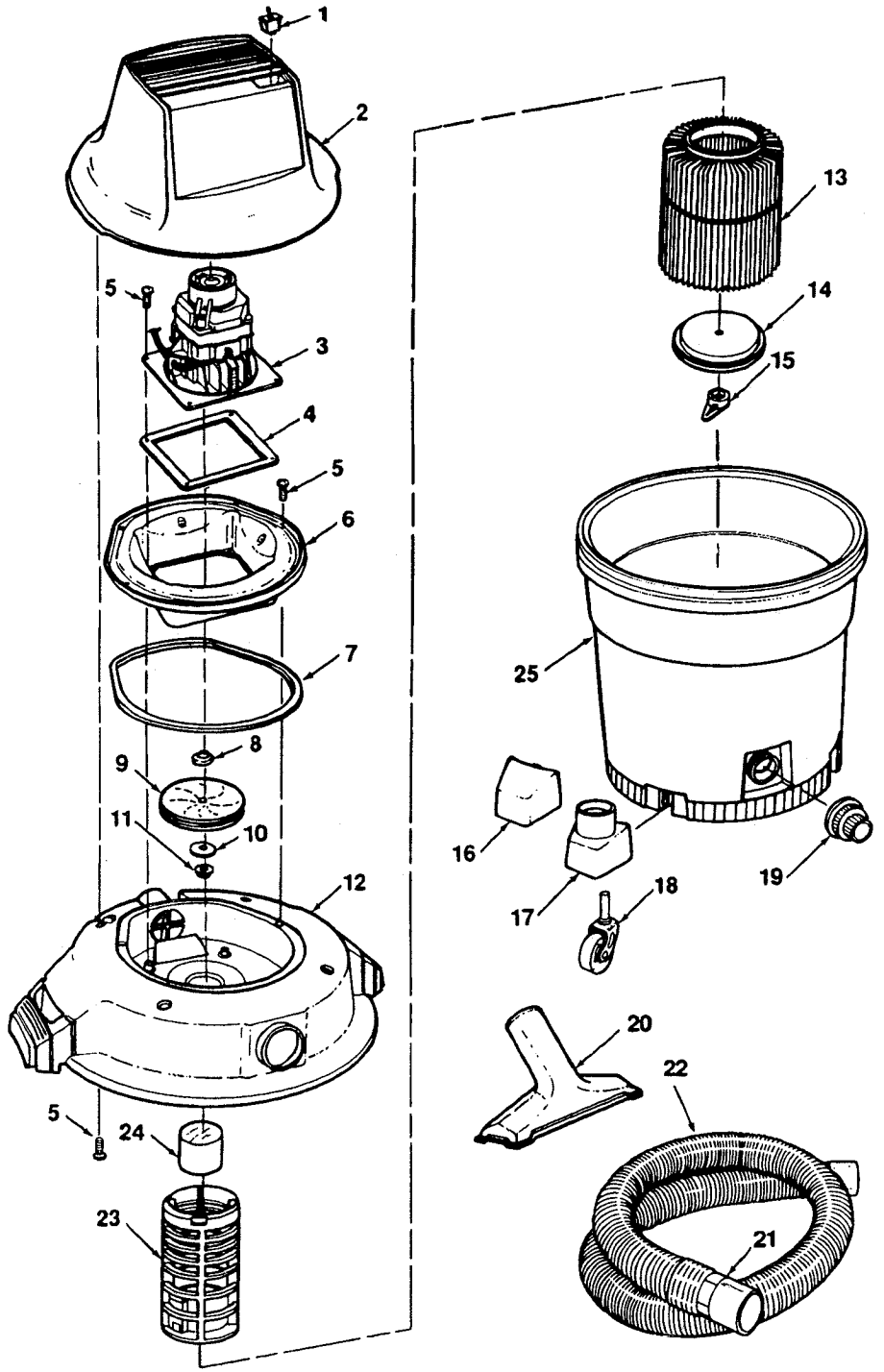

SEARS
owner's manual

SERVICE

MODEL NOS.

113.177311
12 Gallon

113.177331
16 Gallon

12 or 16 GALLON FULL BLOWING WET/DRY VAC

Service is available by returning this Vac to the nearest Sears Service Center/Department throughout the United States.

Model and serial numbers may be found on the handle.

IF YOU NEED REPAIR SERVICE OR PARTS:

For Repair Service, Call this Toll Free Number:

1-800-4-REPAIR

(1-800-473-7247)

For replacement parts information and ordering, call this toll free number:

1-800-FON-PART

(1-800-366-7278)

When ordering repair parts, always give the following information:

PART NUMBER	PART DESCRIPTION
MODEL NUMBER	**NAME OF ITEM**
113.177311 (12-Gallon) 113.177331 (16-Gallon)	Wet/Dry Vac

All parts listed may be ordered from any Sears Service Center and most Sears stores. If the parts you need are not stocked locally, your order will be electronically transmitted to a Sears Repair Parts Distribution Center for handling.

Sears, Roebuck and Co., Hoffman Estates, IL. 60179 U.S.A.

Part No. SP5535 Form No. SP5535-2 Printed in U.S.A. 3/95