SAVE THIS MANUAL FOR FUTURE REFERENCE

SEARS

owner's manual

MODEL NO.
113.177135

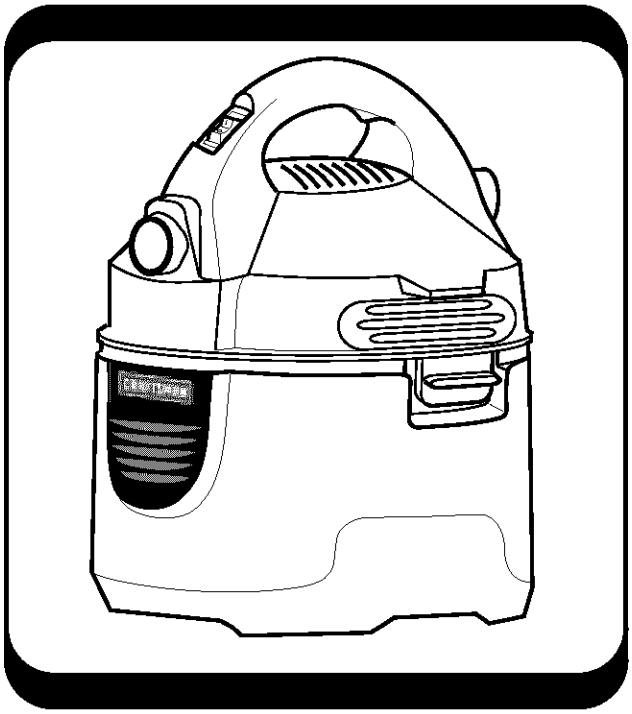

CRAFTSMAN®

2 GALLON WET/DRY VAC

- operating
- maintenance

Serial Number _____

Model and serial numbers may be found on the handle. You should record both model and serial numbers in a safe place for future use.

FOR YOUR SAFETY

READ ALL INSTRUCTIONS CAREFULLY

Sears, Roebuck and Co., Hoffman Estates, IL 60179 U.S.A.

Part No. SP6523 Printed in China

FULL ONE YEAR WARRANTY ON CRAFTSMAN WET/DRY VACS

If this Craftsman Wet/Dry Vac fails due to a defect in material or workmanship within one year from the date of purchase, return it to your nearest Sears Store, and it will be replaced or repaired, at Sears option, free of charge.

If this Craftsman Wet/Dry Vac is used for commercial or rental purposes, this warranty applies for only 90 days from the date of purchase.

This warranty applies only while this product is used in the United States.

This warranty gives you specific legal rights, and you may also have other rights which vary from state to state.

Sears, Roebuck and Co., D817 WA, Hoffman Estates, IL. 60179

IMPORTANT SAFETY INSTRUCTIONS

Safety is a combination of common sense, staying alert and knowing how your vac works. Read this manual to understand the vac.

Safety Signal Words

DANGER: means if the safety information is not followed someone **will** be seriously injured or killed.

WARNING: means if the safety information is not followed someone **could** be seriously injured or killed.

CAUTION: means if the safety information is not followed someone **might** be injured.

When using your Wet/Dry Vac, follow basic safety precautions including the following.

WARNING - To reduce the risk of fire, electric shock, or injury:

Read and understand this owner's manual and all labels on the Wet/Dry Vac before operating. Use only as described in this manual. To reduce the risk of personal injury or damage to Wet/Dry Vac, use only Sears Craftsman recommended accessories.

Sparks inside the motor can ignite flammable vapors or dust. To reduce the risk of fire or explosion:

- Do not vacuum, or use this Wet/Dry Vac, near flammable or combustible liquids, gases, or explosive dusts, such as gasoline or other fuels, lighter fluid, cleaners, oil- based paints, natural gas, hydrogen, coal dust, magnesium dust, grain dust, or gun powder.
- Do not use Wet/Dry Vac as a sprayer.
- Do not vacuum anything that is burning or smoking, such as cigarettes, matches, or hot ashes.
- Do not vacuum fireplace soot or ash. This is a very fine dust which will not be captured by the filter and may cause damage.
- To reduce the risk of health hazards from vapors or dusts, do not vacuum toxic materials.
- Do not use or store near hazardous materials.
- To reduce the risk of electric shock, do not expose to rain. Store indoors.
- Do not allow Wet/Dry Vac to be used as a toy. Close attention is necessary when used by or near children.
- Do not use this Wet/Dry Vac with a torn filter or without the filter installed except when vacuuming liquids as described in the operation section of this manual.
- Do not leave Wet/Dry Vac when plugged in. Unplug from outlet when not in use and before servicing. Turn off Wet/Dry Vac before unplugging.

WARNING: To reduce the risk of fire or electric shock, do not run vac unattended.

- To reduce the risk of injury from accidental starting, unplug power cord before changing or cleaning filter.
- Do not unplug by pulling on cord. To unplug, grasp the plug, not the cord.
- Do not use with damaged cord, plug or other parts. If your Wet/Dry Vac is not working as it should, has missing parts, has been dropped, damaged, left outdoors, or dropped into water, return it to a Sears Service Center.
- Do not pull or carry by cord, use cord as handle, close a door on cord, or pull cord around sharp edges or corners. Do not run Wet/Dry Vac over cord. Keep cord away from heated surfaces.
- Do not handle plug or the Wet/Dry Vac with wet hands.
- Do not put any object into ventilation openings. Do not vacuum with any ventilation openings blocked; keep free of dust, lint, hair or anything that may reduce air flow.
- Keep hair, loose clothing, fingers, and all parts of body away from openings and moving parts.
- To reduce the risk of falls, use extra care when cleaning on stairs.

Observe the following warnings that appear on the motor housing of your Wet/ Dry Vac.

WARNING: To reduce the risk of electric shock - do not expose to rain - store indoors.

WARNING: For your own safety, read and understand owner's manual. Do not pick up hot ashes, coals, toxic, flammable or other hazardous materials. Do not use around explosive liquids or vapors.

SAVE THESE INSTRUCTIONS

The operation of any utility vac or blower can result in foreign objects being blown into the eyes, which can result in severe eye damage. Always wear safety goggles complying with ANSI Z87.1 (shown on package) before commencing operation. Everyday eyeglasses have only impact resistant lenses. They are not safety glasses. Safety Goggles are available at Sears retail stores. Glasses or goggles not in compliance with ANSI or CSA could seriously hurt you when they break.

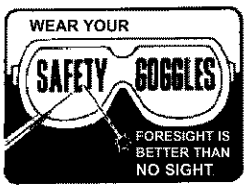

To reduce the risk of hearing damage, wear ear protectors when using the vac for extended hours or when using it in a noisy area.

For dusty operations, wear dust mask.

Use only extension cords that are rated for outdoor use. Extension cords in poor condition or that are too small in wire size can pose fire and shock hazards. When using an extension cord, be sure it is in good condition. Using any extension cord will cause some loss of power. To keep the loss to a minimum, use the following table to choose the minimum wire size extension cord.

Extension Cord Length	Gauge A.W.G.
0-50 Ft.	14
50-100 Ft.	12

Grounding Instructions

This appliance must be grounded. If it should malfunction or breakdown, rounding provides a path of least resistance for electric current to reduce the risk of electric shock. This appliance is equipped with a cord having an equipment-grounding conductor and grounding plug. The plug must be inserted into an appropriate outlet that is properly installed and grounded in accordance with all local codes and ordinances.

WARNING: Improper connection of the equipment grounding conductor can result in a risk of electric shock. Check with a qualified electrician or service person if you are in doubt as to whether the outlet is properly grounded. Do not modify the plug provided with the appliance - if it will not fit the outlet, have a proper outlet installed by a qualified electrician.

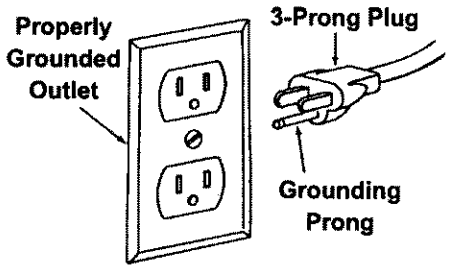

This appliance is for use on a nominal 120 volt circuit, and has a grounded plug that looks like the plug shown. A temporary adaptor that looks like the adaptor shown may be used to connect this plug to a 2-pole receptacle, as shown. If a properly grounded outlet is not available, the temporary adaptor should be used only until a properly grounded outlet can be installed by a qualified electrician. The green colored rigid ear, lug or the like extending from the adaptor must be connected to a permanent ground such as a properly grounded outlet box cover. Whenever the adaptor is used, it must be held in place by a metal screw.

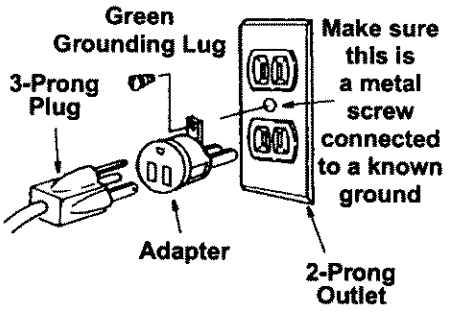

NOTE: In Canada, the use of a temporary adaptor is not permitted by the Canadian Electrical Code.

Introduction

This vac is intended for household use only. It may be used for light vacuuming of wet or dry media and may also be used as a blower. The light weight design allows usage for most small household vacuuming chores. Familiarize yourself with the following product features and read the entire owner's manual for specific usage of your new wet/dry vac.

IMPORTANT NOTE
Please Read Carefully

Static Shocks Are Common - In dry areas or when the relative humidity of the air is low. To reduce the frequency of static shocks in your home, the best remedy is to add moisture to the air with a console humidifier.

Table of Contents

Item	Page
Warranty	2
Important Safety Instructions	2
Safety Signal Words	2
Grounding Instructions	4
Introduction	5
Table of Contents	5
Unpacking and Checking Carton Contents	5
Getting to Know Your Vac	6
Cord Storage	6
Hose Storage	6
Operation	7
Vacuuming Dry Materials	8
Vacuuming Liquids	8
Emptying the Dust Drum	9
Blowing Feature	9
Maintenance	10
Filter	10
Removal	10
Installation	10
Cleaning	11
Storage	11
Accessories	11
Troubleshooting	11

Unpacking and Checking Carton Contents

Remove entire contents of carton. Check each item against the Carton Contents List. Notify your Sears Store immediately if any parts are damaged or missing.

Carton Contents Lists

Key	Description	Qty.
A	Vac	1
B	Hose	1
C	Car Nozzle	1
D	Owners Manual	1

Replacement filters and retainer band (already assembled)

Sears retail replacement filters are sold by stock no. 9-16949.

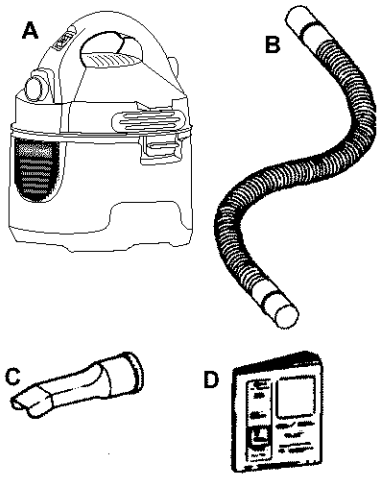

Getting to Know Your Vac

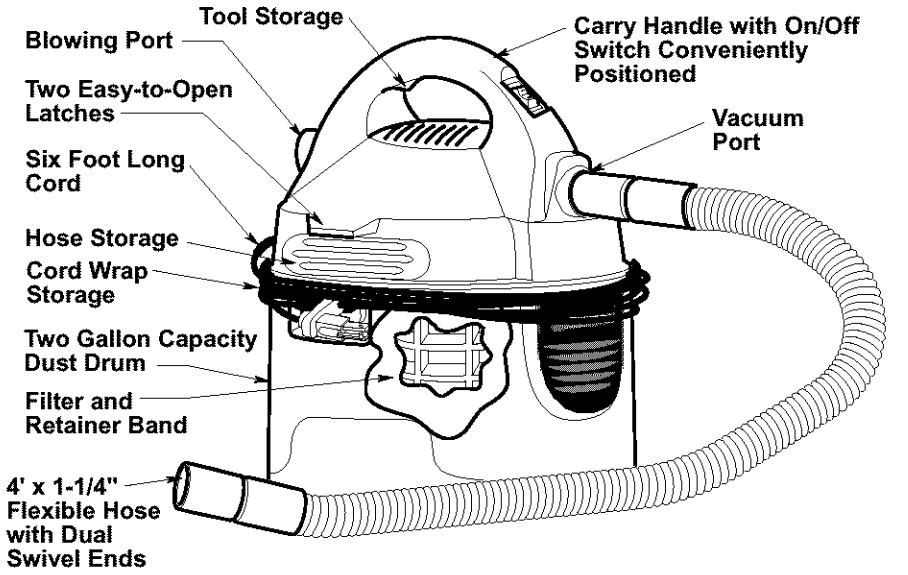

Cord Storage

Coil the power cord tightly around the dust drum.

CAUTION: A partially unwrapped cord may fall in coils near your feet. To avoid this tripping hazard, always fully unwrap the cord before plugging it in.

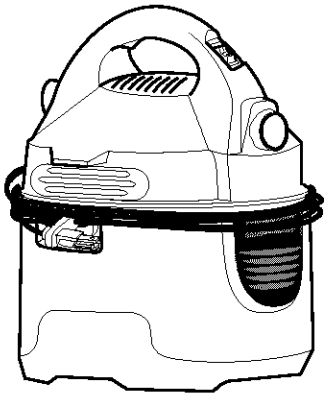

Hose Storage

The power head has recesses on each side for hose storage.

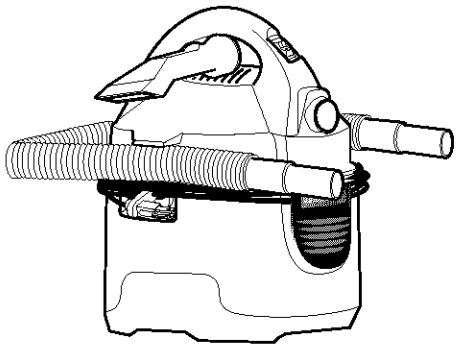

Operation

WARNING

To reduce the risk of fire or explosion, do not operate this vac in areas with flammable gases, vapors or explosive dust in the air. Flammable gases or vapors include but are not limited to: lighter fluid, solvent type cleaners, oil-base paints, gasoline, alcohol or aerosol sprays. Explosive dusts include but are not limited to: coal, magnesium, grain or gun powder. Do not vacuum explosive dust, flammable or combustible liquids or hot ashes. Do not use this vac as a sprayer for any flammable or combustible liquid. To reduce the risk of health hazards from vapors or dusts, do not vacuum toxic materials.

CAUTION: To reduce the risk of hearing damage, wear ear protectors when using the vac for extended hours or when using it in a noisy area.

The operation of any utility vac can result in foreign objects being blown into the eyes, which can result in severe eye damage. Always wear safety goggles complying with ANSI Z87.1 (shown on package) before commencing operation. Safety goggles are available at Sear retail stores.

Your Craftsman two-gallon wet/dry vac is assembled at the factory and ready for use when you remove it from the carton. The unit is ready for dry vacuuming or blowing. After you plug the power cord into the wall receptacle, turn the unit "ON" by pushing the switch from position **"O"** to position **"I"**. The symbols used on the switch are international symbols. The **"O"** is the "OFF" position and the **"I"** is the "ON" position.

◯ = OFF **| = ON**

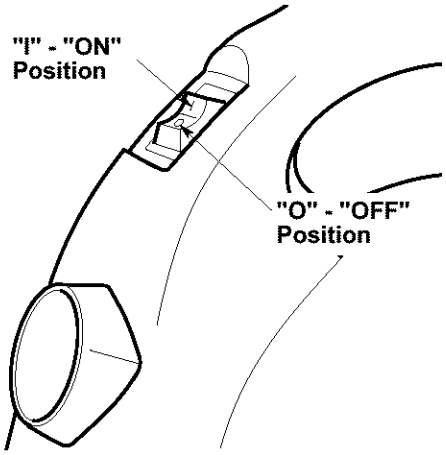

Operation (continued)

Vacuuming Dry Materials

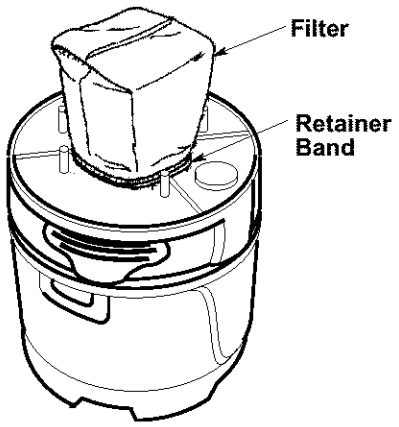

1. The filter must always be in correct position to reduce the risk of leaks and possible damage to vac. Make sure that the filter is completely covering the filter cage and that the retainer band is as close to the lid as possible. Make sure there are no gaps between the filter and the lid. (See illustration). **It is very important to assemble the filter to the cage without allowing any possible leaks or tears. Any leaks will allow the picked up media to be blown out of the blower port and back into the surrounding environment.**
2. When using your vac to pick up very fine dust, it will be necessary for you to empty the dust drum and clean or replace the filter at more frequent intervals to maintain peak vac performance.

NOTE: A dry filter is necessary to pick up dry material. If you use your vac to pick up dust when the filter is wet, the filter will clog quickly and be very difficult to clean.In case the filter gets wet, replace it before continuing to do dry pickups.

Vacuuming Liquids

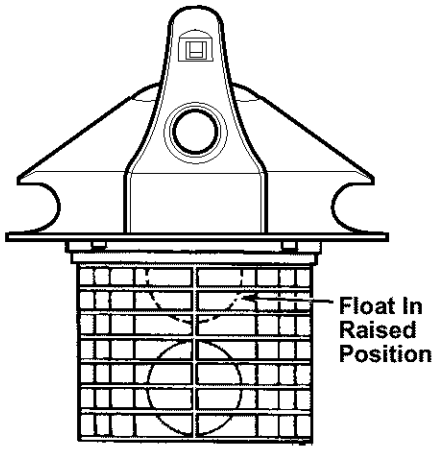

1. Removal of the filter is highly recommended for wet pickups.
2. This wet/dry vac is equipped with a float mechanism which will rise automatically to cut off the airflow when the liquid in the drum reaches a predetermined level. When this happens, turn off vac, unplug the power cord, and empty the dust drum. You will know that the float has shut the airflow off because the suction ceases and the motor noise becomes higher in pitch, due to increased motor speed. The liquid capacity may vary with the rate of pickup.

IMPORTANT: To reduce the risk of damage to the vac, do not run motor with float in raised position.

Emptying the Drum

WARNING: To reduce the risk of injury from accidental starting, unplug power cord before emptying the drum.

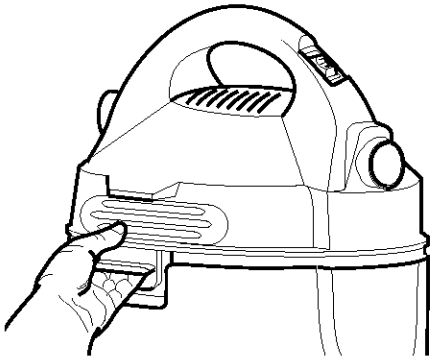

1. Remove the power head assembly of the wet/dry vac by pulling outward on the latches located on each side of the vac. Lift off the power head assembly.
2. Dump the drum contents into the proper waste disposal container.

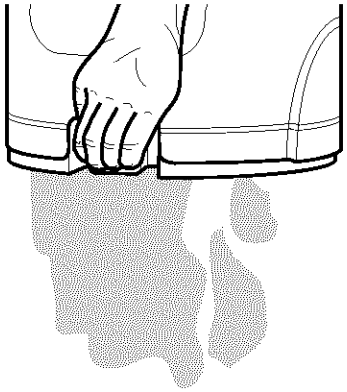

Blowing Feature

Your vac contains a blowing feature. It has the capability to blow sawdust and other debris. It is excellent to use to blow dust and debris out of garages or off patios and driveways. Follow the steps below to use your vac as a blower.

1. Locate blowing port of your vac.
2. Insert one end of the 4 foot x 1-1/4 inch hose into the blowing port.
4. Turn vac "ON"and you are ready to use your vac as a blower.

NOTE: If you need additional length at the end of the hose, extension wands are available at Sears retail stores as stock no. 9-17861.

WARNING: Always wear safety goggles complying with ANSI Z87.1 when using as a blower.

WARNING: Wear a dust mask if blowing creates dust which might be inhaled.

CAUTION: To reduce the risk of hearing damage, wear ear protectors when using the vac/blower for extended hours or when using it in a noisy area.

WARNING: To avoid injury to bystanders, keep them clear of blowing debris.

Maintenance

Filter

WARNING: To reduce the risk of injury from accidental starting, unplug power cord before changing or cleaning filter.

Your filter should be cleaned often to maintain peak vac performance.

Easy to Replace Filter

1. Extend the retainer band around the plastic posts on the lid.
2. Remove filter bag off the filter cage.
3. Place the replacement filter on the filter cage until open end touches bottom of lid.
4. Release the retainer band from the plastic post on the lid, holding the filter bag secure to the lid.
5. Make sure the retainer band is positioned on the filter bag covering the black printed line.

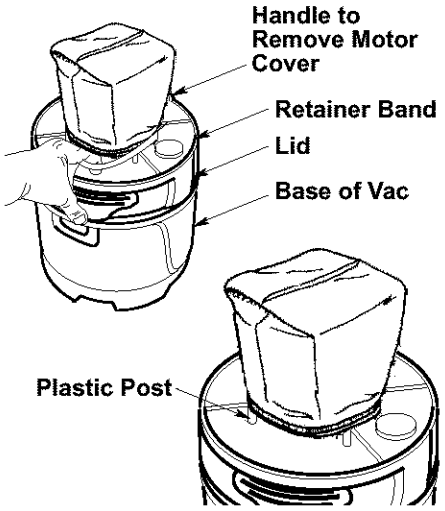

IMPORTANT: To avoid damage to the blower wheel and motor, always reinstall the filter before using the vac for dry material pick-up.

Take the dirty filter to a disposal container and gently brush away small dirt particles that may be adhering to the filter material.

IMPORTANT: After cleaning, check the filter for tears or small holes. Do not use a filter with holes or tears in it. Even a small hole can cause a lot of dust to come out of your vac. Replace it immediately.

Installation

New filters may be purchased at area Sears retail stores, Sears retail replacement filters ar sold by stock no. 9-16949.

NOTE: Before installing the filter on the vac, clean the area of the lid so that the retainer band will seal the bag against the lid and stop small particles from bypassing the filter bag.

If the filter is clean and not damaged, replace it on the filter cage. If it cannot be reused, place a new filter over the filter cage.

Replace the retainer band around the filter. Make sure the retainer band is positioned on the filter, and the filter completely covers the filter cage. Also, make sure the edges of the filter are completely secured under the retainer band.

NOTE: Clean the filter in an open area. Cleaning should be done outdoors and not in the living quarters.

WARNING: Do not remove the filter cage. It is there to help prevent your fingers from getting into the blower wheel.

Maintenance (continued)

Cleaning

To keep your Wet/Dry Vac looking its best, clean the outside with a cloth dampened with warm water and mild soap.

To clean the drum:

1. Dump debris out.
2. Wash drum thoroughly with warm water and mild soap.
3. Wipe out with dry cloth.

Storage

Before storing your vac, the dust drum should be emptied and cleaned. The cord should be wrapped around the unit and the hose should be stored as described in the cord/hose storage section in this manual. Accessories should be kept in the same area as the vac so they can be readily available. The vac should be stored indoors.

Accessories

Sears offers many specialized 1-1/4" non-mechanical cleaning accessories that may be used with this wet/dry vac.

Wet/dry vac accessories may be found at all Sears retail stores and may also be ordered from the Sears "Power and Hand Tool" Catalog.

Troubleshooting

Problem	Cause	Remedy
Vac will not pick up dirt	1. Clogged filter	1. Clean or replace filter (follow instructions on page 10)
	2. Clogged hose	2. Remove hose and clear debris.
	3. Air leak	3. Make sure power head is securely attached to dust drum.
Vac will not run	1. No electricity	1. Make sure electrical outlet has voltage. (A qualified electrician may need to be contacted).

WARNING: If any of the power head assembly parts should become detached or broken, exposing motor or any other electrical components, operation should be discontinued immediately to avoid personal injury or further damage to the vacuum. Repairs should be made before reusing the vacuum.

For the repair or replacement parts you need
Call 7 am - 7 pm, 7 days a week
1-800-366-PART
(1-800-366-7278)

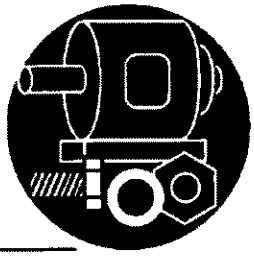

For in-home major brand repair service
Call 24 hours a day, 7 days a week
1-800-4-REPAIR
(1-800-473-7247)



For the location of a Sears Repair Service Center in your area
Call 24 hours a day, 7 days a week
1-800-488-1222



For information on purchasing a Sears Maintenance Agreement or to inquire about an existing Agreement
Call 9 am - 5 pm, Monday-Saturday
1-800-827-6655



SEARS
REPAIR SERVICES
America's Repair Specialists

The model and serial numbers will be found on the motor cover.

When requesting service or ordering parts, always provide the following information:

- **Product Type**
- **Model Number**
- **Part Number**
- **Part Description**

© 2003 Emerson

Sears, Roebuck and Co., Chicago, IL 60179 U.S.A.

Part No. SP6523 Form No. SP6523 Printed in China. 07/03