Save This Manual
for Future Reference

SEARS

owner's manual

MODEL NO.
113.170370

Serial
Number _____
Model and serial numbers may be found on the side of the detachable blower. You should record both model and serial numbers in a safe place for future use.

FOR YOUR SAFETY

READ ALL INSTRUCTIONS CAREFULLY

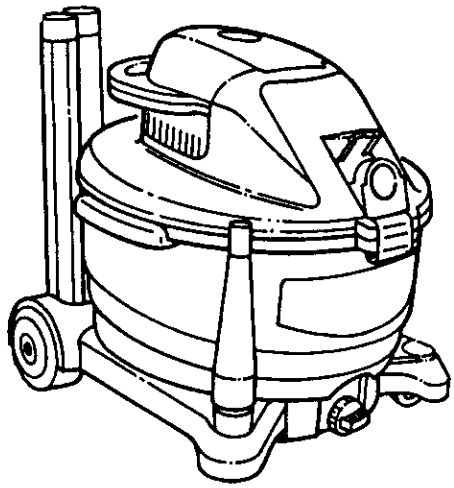

CRAFTSMAN®

16 GALLON WET/DRY VAC WITH DETACHABLE BLOWER

- assembly
- operating
- repair parts

Sears, Roebuck and Co., Hoffman Estates, IL. 60179 U.S.A.
Part No. SP6516 Printed in U.S.A.

FULL ONE YEAR WARRANTY ON CRAFTSMAN WET/DRY VACS

If within one year from the date of purchase, this Craftsman Wet/Dry Vac fails due to a defect in material or workmanship, Sears will repair it, free of charge.

If this Craftsman Wet/Dry Vac is used for commercial or rental purposes, this warranty coverage applies for only 90 days from date of purchase.

Warranty Service Is Available By Simply Contacting The Nearest Sears Service Center/department Throughout The United States.

This warranty applies only while this product is in the United States.

This warranty gives you specific legal rights, and you may also have other rights which vary from state to state.

Sears, Roebuck and Co., D/817 WA, Hoffman Estates, IL 60179

IMPORTANT SAFETY INSTRUCTIONS

Safety is a combination of common sense, staying alert and knowing how your vac works. Read this manual to understand the vac.

Safety Signal Words

DANGER: means if the safety information is not followed someone **will** be seriously injured or killed.

WARNING: means if the safety information is not followed someone **could** be seriously injured or killed.

CAUTION: means if the safety information is not followed someone **may** be injured.

When using your Wet/Dry Vac, follow basic safety precautions including the following.

WARNING - To reduce the risk of fire, electric shock, or injury:

Read and understand this owner's manual and all labels on the Wet/Dry Vac before operating. Use only as described in this manual. To reduce the risk of personal injury or damage to Wet/Dry Vac, use only Sears Craftsman recommended accessories. Sparks inside the motor can ignite flammable vapors or dust. To reduce the risk of fire or explosion:

- Do not vacuum, or use this Wet/Dry Vac near, flammable or combustible liquids, gases, or explosive dusts like gasoline or other fuels, lighter fluid, cleaners, oil-based paints, natural gas, hydrogen, coal dust, magnesium dust, grain dust, or gun powder.
- Do not use Wet/Dry Vac as a sprayer.
- Do not vacuum anything that is burning or smoking, such as cigarettes, matches, or hot ashes.
- Do not vacuum fireplace soot or ash. This is a very fine dust which will not be captured by the filter and may cause damage.
- To reduce the risk of health hazards from vapors or dusts, do not vacuum toxic materials.
- Do not use or store near hazardous materials.
- To reduce the risk of electric shock, do not expose to rain. Store indoors.
- Do not allow to be used as a toy. Close attention is necessary when used by or near children.
- Do not use this Wet/Dry Vac with a torn filter or without the filter installed except for vacuuming liquids as described in the operation section of this manual.
- Do not leave Wet/Dry Vac when plugged in. Unplug from outlet when not in use and before servicing. Turn off Wet/Dry Vac before unplugging.

WARNING: To reduce the risk of fire or electric shock, do not run vac unattended.

- To reduce the risk of injury from accidental starting, unplug power cord before changing or cleaning filter.
- Do not unplug by pulling on cord. To unplug, grasp the plug, not the cord.
- Do not use with damaged cord, plug or other parts. If your Wet/Dry Vac is not working as it should, has missing parts, has been dropped, damaged, left outdoors, or dropped into water, return it to a Sears Service Center.
- Do not pull or carry by cord, use cord as handle, close a door on cord, or pull cord around sharp edges or corners. Do not run Wet/Dry Vac over cord. Keep cord away from heated surfaces.
- Do not handle plug or the Wet/Dry Vac with wet hands.
- Do not put any object into ventilation openings. Do not vacuum with any ventilation openings blocked; keep free of dust, lint, hair or anything that may reduce air flow.
- Keep hair, loose clothing, fingers, and all parts of body away from openings and moving parts.
- To reduce the risk of falls, use extra care when cleaning on stairs.

This Wet/Dry Vac is double-insulated, eliminating the need for a separate grounding system. Use only identical replacement parts. Read the instructions for Servicing Double-Insulated Wet/Dry Vacs before servicing.

Use this Wet/dry Detachable Blower Vac as described in this manual.

When using as detached blower:

- Turn unit off before setting on ground or releasing grasp from handle.
- Do not use on wet surfaces, electric shock could occur.
- Direct air discharge only at work area.
- Do not direct air at bystanders.
- Keep children away when blowing.
- Do not use blower for any job except blowing dirt and debris.

Observe the following warnings that appear on the motor housing of your Wet/Dry Vac.



DOUBLE INSULATED
GROUNDING NOT REQUIRED
WHEN SERVICING USE ONLY
IDENTICAL REPLACEMENT PARTS

WARNING: To reduce the risk of electric shock- do not expose to rain-store indoors.

WARNING: For your own safety, read and understand owner's manual. Do not pick up hot ashes, coals, toxic, flammable or other hazardous materials. Do not use around explosive liquids or vapors.

SAVE THESE INSTRUCTIONS

The operation of any utility vac or blower can result in foreign objects being blown into the eyes, which can result in severe eye damage. Always wear safety goggles complying with ANSI Z87.1 (shown on package) before commencing operation. Safety Goggles are available at Sears retail stores.



To reduce the risk of hearing damage, wear ear protectors when using the vac for extended hours or when, using it in a noisy area.

For dusty operations, wear dust mask.

Use only extension cords that are rated for outdoor use. Extension cords in poor condition or that are too small in wire size can pose fire and shock hazards. When using an extension cord, be sure it is in good condition. Using any extension cord will cause some loss of power. To keep the loss to a minimum, use the following table to choose the minimum wire size extension cord.

Extension Cord Length	Gauge (A.W.G.)
0-50 Ft.	14
50-100 Ft.	12

Introduction

This Wet/Dry Vac is intended for household use only.

IMPORTANT NOTE
Please Read Carefully

Static Shocks Are Common - In dry areas or when the relative humidity of the air is low. To reduce the frequency of static shocks in your home the best remedy is to add moisture to the air with a console humidifier.

Table of Contents

Item	Page
Warranty Information	2
Safety Instructions	2
Introduction	4
Unpacking and Checking Carton Contents	4
Assembly	5
Operation	9
Maintenance	13
Repair Parts	16

Unpacking and Checking Carton Contents —

Remove entire contents of carton. Check each item against the Carton Contents List. Some units may include accessories not shown. Notify your Sears Store immediately if any parts are damaged or missing.

Carton Contents List

Key	Description	Qty.
A	16 Gallon Wet/Dry Vac	1
B	Hose	1
C	Blower Adapter	1
D	Diffuser	1
E	Blower Nozzle	1
F	Utility Nozzle	1
G	Wet Nozzle	1
H	Car Nozzle	1
J	Crevice Tool	1
K	Extension Wands	2
L	Accessory Caddy	1
M	Float	1
N	Filter Cage	1
P	Filter (Red Stripe)	1
R	Filter Plate	1
S	Filter Nut	1
T	Single Wheel Caster	2
U	Wheel Assembly	2
V	Owners Manual	11

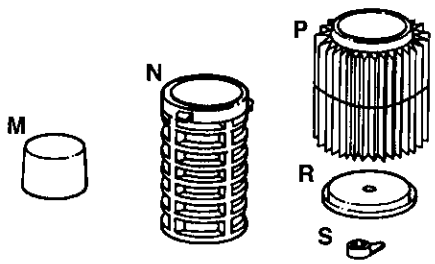

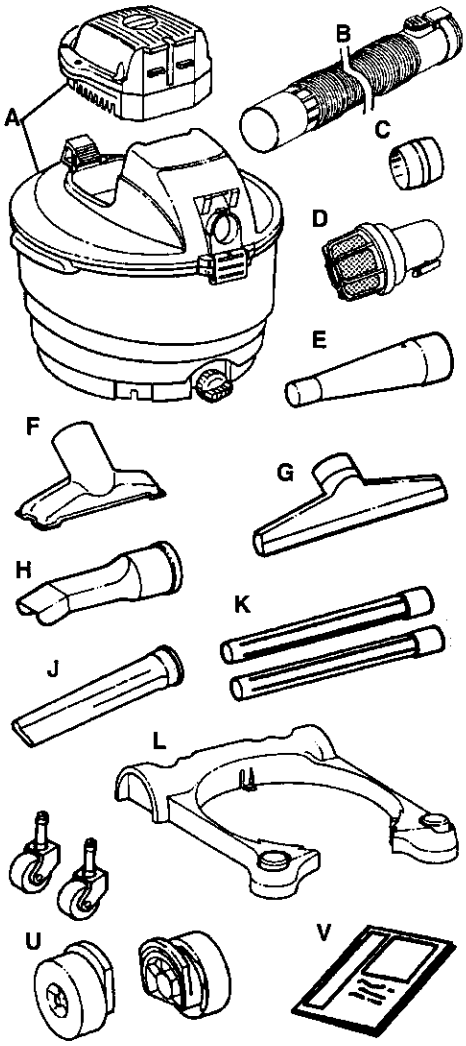

Accessory Caddy Assembly

1. Unlatch the drum latches on the front and rear of unit. The drum latches hold the lid onto the drum. Lift the lid off the drum. Place the lid upside down on a clean smooth surface.
2. Flip the drum upside down on the floor.
3. Take the accessory caddy and position it on the vac drum. The open end of horseshoe shaped caddy should be positioned under the drain cap.
4. Slide the caddy down onto the drum, the open end of the caddy has two dovetail slides that will press into the molded area of the drum. The caddy will press onto the drum until it rests against the first step of the drum. The bottom edge of the caddy will be even with the bottom edge of the vac drum. If it is not even with the bottom of the drum, tap the edge until it is flush with the drum bottom. The tab lock located at the rear of the caddy will latch into the recessed area at the rear of the vac drum.

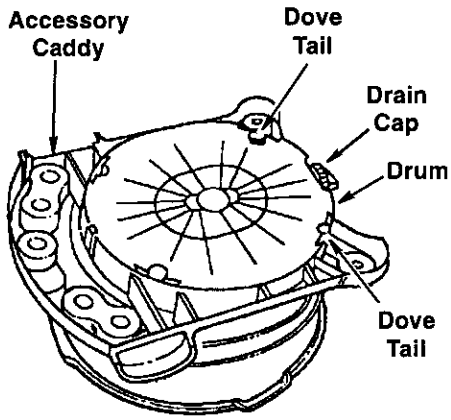

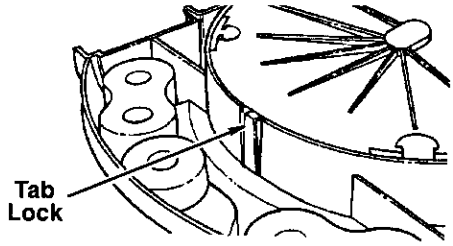

To Install the Wheels/Casters

1. Locate the two 5-1/4" wheel assemblies and the single wheel casters.
2. Insert the single wheel casters into the bottom of the accessory caddy as shown (2 places).
3. Push on the caster until the end of the caster stem is inserted all the way into the socket. You will be able to hear the end of the caster snap into the socket of the caddy. The caster will rotate easily when positioning is correct.
4. Position the dovetail section of one of the wheel assemblies into the accessory caddy as illustrated. Tap the wheel support of the assembly with a soft mallet if necessary. Repeat for the second wheel assembly.

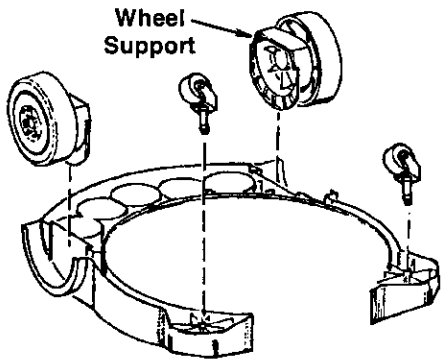

5. Flip the drum/caddy assembly upright with the wheels of the caddy resting on the floor.

NOTE: When emptying debris from the wet/dry drum, it is not necessary to remove the vac caddy.

Float/Cage Assembly

WARNING: For your own safety, never connect plug to power source outlet until all assembly steps are complete and you have read and understood the safety and operation instructions. Do not operate vac with any parts damaged or missing.

1. Remove the detachable blower from the power head assembly by pressing down on the power head latch beneath the carry handle of the detachable blower. Set the detachable blower off to the side. Place lid upside down on drum.
2. Locate the float and filter cage.
3. Place the float over the center opening in the lid with the words "This side towards lid" laying face down over the hole. (See illustration.)

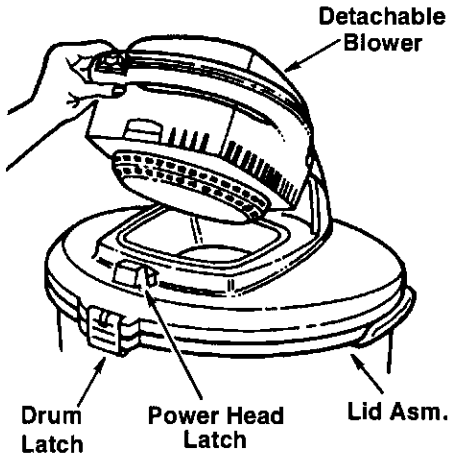

WARNING: To reduce the risk of personal injury or damage to vac be sure to keep hands, fingers, or any other foreign objects out of the center opening when assembling the float.

4. Line up the filter cage tabs as shown with the slots in the center ring of the lid assembly. Push on the filter cage until the tabs snap into the slots for a secure fit.

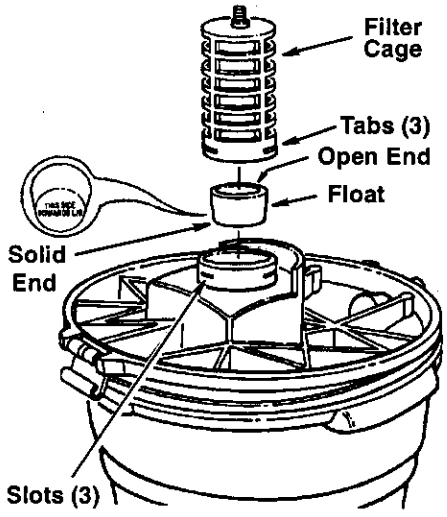

NOTE: If filter cage needs to be removed, because the float is placed in the wrong way, use a flat blade screwdriver and insert the blade near one of the tabs between the filter cage and the center ring of the lid. Pry the tab out of the slot. Tilt the cage and lift away from the lid. To replace, follow float/cage assembly instructions.

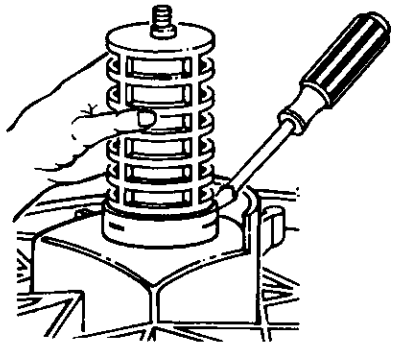

Filter Assembly

1. Carefully slide the filter over the filter cage, sliding it over the center ring covering the 3 slots until the filter stops against the lid.
2. Place the hole in the filter plate over threaded screw of the filter cage.
3. Gently push on the filter plate to seat the rubber ring of the filter inside the circular channel of the filter plate.
4. Place filter nut onto threaded screw and tighten it down. Finger tighten only.

NOTE: Lever of filter nut should be away from plate as shown.

IMPORTANT: Do not overtighten as this may deform or crack the filter plate, filter cage or the filter.

NOTE: Your filter has a red stripe that matches an in-store displayer. When you visit your local Sears store, just remember the color of your stripe for the correct size filter.

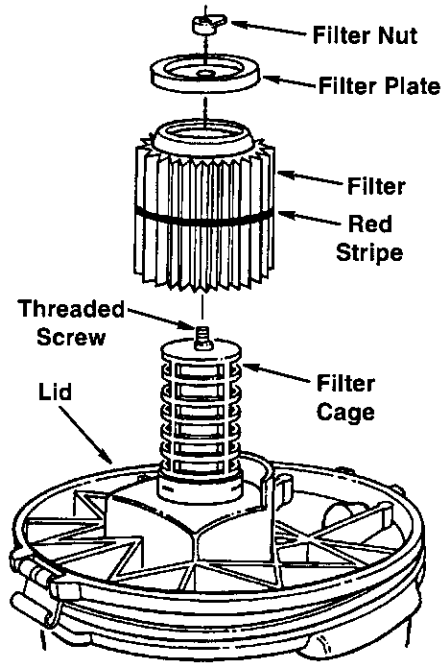

Vac Assembly

1. Locate the lid assembly and the drum/caddy assemblies (assembled earlier).
2. Position the lid assembly with the inlet of the unit located in line with the drain cap and the drum label on the vac. Allow the assembly to rest on the vac drum.
3. Rotate both latches down until you hear the latches snap over the lip of the drum.

   NOTE: For best appearance of the unit, the inlet of the vac should be located above the drain.

Cord Storage

Simply wrap the power cord around the lid assembly and snap the connector on the plug to a wrap of the cord.

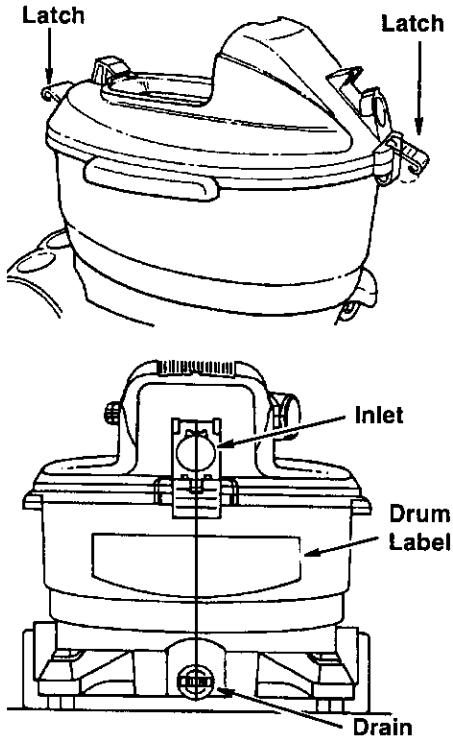

Positioning Detachable Blower (Power Head Assembly)

1. Locate the detachable blower of your Craftsman wet/dry vac.
2. On top of the blower (opposite the handle side of the blower); there is molded plastic lead that is used to assist assembling the unit. Position the lead into the indented area above the label.

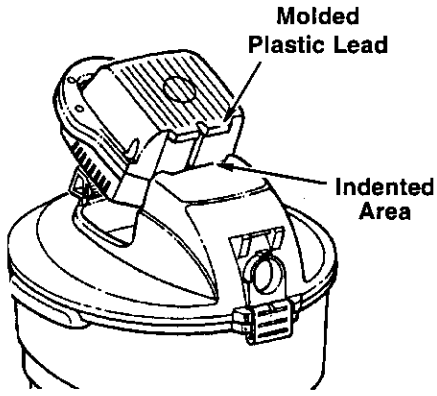

3. Rotate the detachable blower down until the travel of the unit stops.
4. Lightly press down on the carry handle of the detachable blower until the power head latch engages the blower. The detachable blower is now latched to the lid assembly.

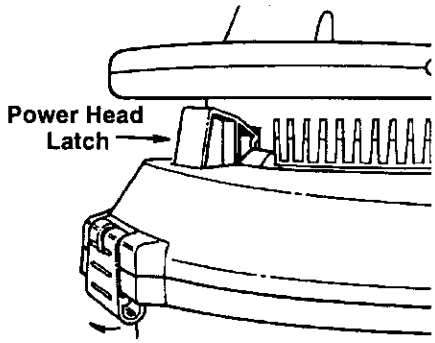

Your new wet/dry vac is ready for use.

With the wet/dry vac completely assembled and ready for use, insert the push button end of the hose assembly into the inlet of the vac. The hose should snap into place. To remove the hose from the vac press the release button in the hose assembly and pull the hose out of the vac inlet.

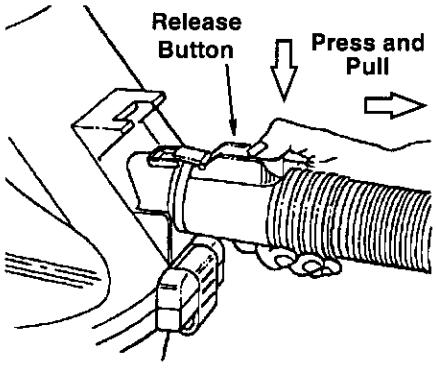

Operation

WARNING

To reduce the risk of fire or explosion, do not operate this vac in areas with flammable gases or flammable vapors such as lighter fluid, cleaners, oil-base paints, gasoline, alcohol or explosive dust such as coal, magnesium, grain or gun powder in the air. Do not vacuum explosive dust, flammable or combustible liquids or hot ashes. Do not use this vac as a sprayer. To reduce the risk of health hazards from vapors or dusts, do not vacuum toxic materials. To reduce the risk of electrical shock do not expose to rain. Store vac indoors. Unplug power cord before changing or cleaning filter or emptying the dust drum.

CAUTION: To reduce the risk of hearing damage wear ear protectors when using the vac or blower for extended hours or when using it in a noisy area. The operation of any utility vac or blower can result in foreign objects being blown into the eyes, which can result in severe eye damage. Always wear safety goggles complying with ANSI Z87.1 (shown on Package) before commencing operation. Safety Goggles are available at Sears retail stores.

If the noise level of this unit is too loud, purchase the Craftsman Noise Muffler; accessory number 9-16993 found in Sears retail stores or the Sears Power and Hand Tool Catalog.

To reduce the risk of electric shock, this appliance has a polarized plug (one blade is wider than the other). This plug will fit in a polarized outlet only one way. If the plug does not fit fully in the outlet, reverse the plug. If it still does not fit, contact a qualified electrician to install the proper outlet. Do not change the plug in any way.

NOTE: When using the unit in the vacuuming mode, always insert the air diffuser in the exhaust port on the detachable blower. This breaks up the direct flow of air and diffuses it.

Vacuuming Dry Materials

1. The filter must be in correct position at all times to reduce the risk of leaks and possible damage to vac.
2. When using your vac to pick up very fine dust, it will be necessary for you to empty the drum and clean the filter at more frequent intervals to maintain peak vac performance.

NOTE: A dry filter is necessary to pick up dry material. If you use your vac to pick up dust when the filter is wet, the filter will clog quickly and be very difficult to clean.

3. If your filter is wet but you need to use the vac to pick up dry material, you can quickly dry the filter by running the vac without hose attached for about 10 minutes. The clean air rushing through the vac will help dry the filter.

The optional Craftsman Fine Particle Filter, stock number 9-17916 will do a better job stopping the very fine particles than the 9-17816 filter. This filter will stop 99.99% of all particles as small as one micron.

Vacuuming Liquids

1. When picking up small amounts of liquid the filter may be left in place.
2. When picking up large amounts of liquid we recommend that the filter be removed. If the filter is not removed, it will become saturated and misting may appear in the exhaust.
3. After using the vac to pick up liquids, the filter must be dried to reduce the risk of possible mildew and damage to the filter.

4. When the liquid in the drum reaches a predetermined level, the float mechanism will rise automatically to cut off airflow. When this happens, turn off the vac, unplug the power cord, and empty the drum. You will know that the float has risen because vac airflow ceases and the motor noise will become higher in pitch, due to increased motor speed.

IMPORTANT: To reduce the risk of damage to the vac do not run motor with float in raised position.

Emptying Dust Drum

WARNING: To reduce the risk of injury from accidental starting, unplug power cord before emptying the drum.

1. To remove the lid to empty contents of the dust drum, simply lift the two drum latches at the front and rear of the dust drum and lift the lid assembly up and off the dust drum and set to the side.
   NOTE: Do not pick up the lid assembly by lifting on the handle to the detachable blower. Lift the lid assembly by the latches. This will ensure that the detachable blower and the lid will not separate during removal of the lid assembly.
2. Lay the lid assembly upside down on a clean dry area while emptying the drum or changing the filter.
3. Dump the drum contents into the proper waste disposal container.

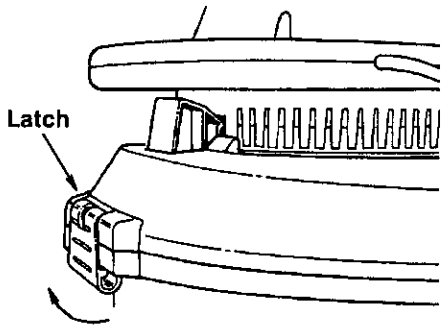

4. If the contents are liquid, you may dispose by using the drain provided in the drum for easy emptying. Simply unscrew the drain cap and allow the liquid to drain completely out of the vac drum.

WARNING: To reduce the risk of back injury or falls, do not lift a vac heavy with liquid or debris. Scoop or drain enough contents out to make the vac light enough to lift comfortably.

To Store Your Accessories

Your Craftsman wet/dry vac caddy is designed to provide better stability and accessory storage. There are five storage pockets located at the rear of the vac caddy and two storage areas at the front of the storage caddy. Conveniently store accessory nozzles and extension wands on the rear of the caddy and use the front storage for hose storage and/or male to male and air diffuser storage.

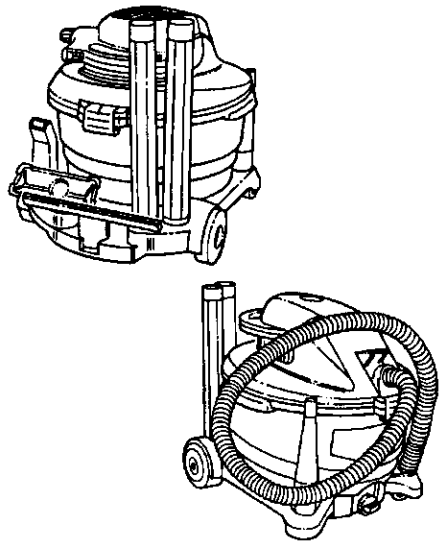

Cord Wrap

When vacuuming is complete, unplug the cord and wrap it around the lid assembly in the area provided between the inlet and the raised letter area marked "Cord Wrap".

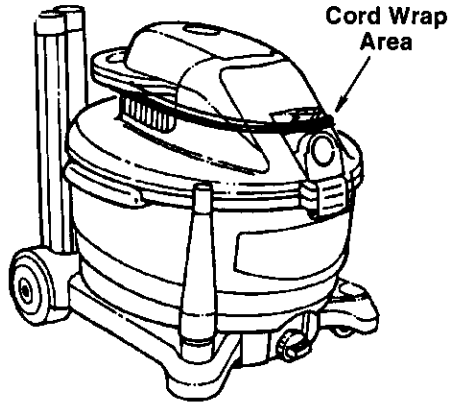

Operation (continued)

Moving the Vac

Should it become necessary to pick the vac up to move it, the handles may be used on the sides of the dust drum. Do not use the handle located on the detachable blower to pick up the entire wet/dry vac or the lid assembly.

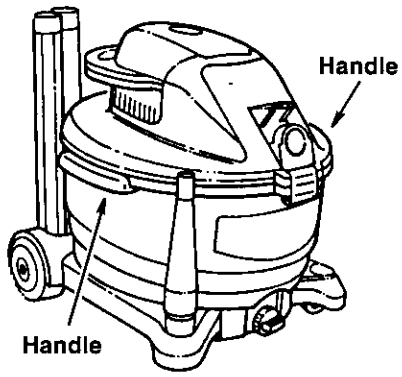

Blowing Feature

Your wet/dry vac features a "detachable blower". It has the capability to be used as a dedicated blower for yard work, patio cleanup and workshop applications to blow sawdust and other debris.

WARNING: Always wear safety goggles complying with ANSI Z87.1 when using as a blower.

WARNING: Wear a dust mask if blowing creates dust which might be inhaled.

CAUTION: To reduce the risk of hearing damage wear ear protectors when using the vac/blower for extended hours or when using it in a noisy area.

WARNING: To reduce the risk of injury to bystanders, keep them clear of blowing debris.

1. Familiarize yourself with the detachable blower portion of your wet/dry vac.
2. Remove the detachable blower of your vac by pressing down on the latch under the handle of the detachable blower. This latch holds the detachable blower to the lid assembly.
3. Lift the detachable blower up by raising the handle upward and pulling the unit away from the nested position of the hinges.

Assemble the Detachable Blower for "Blowing"

This may be assembled two ways.

1. Insert the small end of one of the extension wands into the blowing port of the detachable blower. Insert the blowing adapter into the extension wand and install the blower nozzle onto the blowing adapter.

-OR-

2. Insert the blowing adapter into the blowing port of the detachable blower. Connect the large end of the extension wand to the blowing adapter. Connect the blower nozzle to the extension wand.

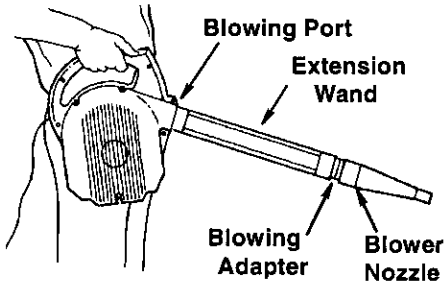

3. Turn the blower "ON" by toggling the switch in the handle of the blower to the "ON" position.

The wet/dry vac may also be used for blowing using the seven foot hose supplied with the wet/dry vac.
Install the blower adapter in the blowing port of the wet/dry vac.
The blower adapter will insert into the inside of the push button end of the vac hose. Assemble the hose to the blower adapter and connect the blower nozzle to the opposite end of the hose.
The unit is ready for blowing applications.

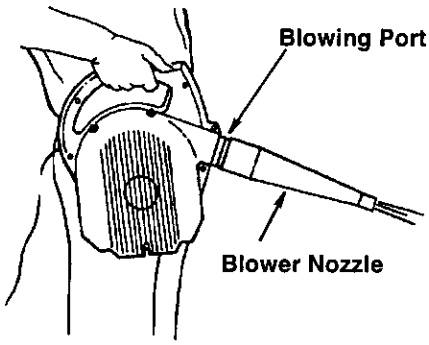

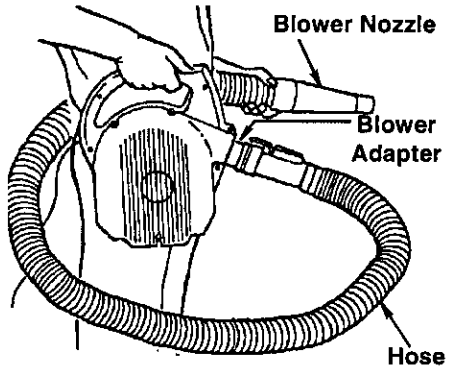

Maintenance

Blower Intake

WARNING: To reduce the risk of injury from accidental starting, unplug power cord before changing or cleaning filter.

After using the detachable blower of your wet/dry vac, examine the bottom of the blower for dust and debris. Check to see if the intake to the blower has debris stuck to the plastic vents and foam pad.
To clean the foam pad under the intake shield of the detachable blower:

1. Remove the three screws holding the intake shield.
2. Lift the intake shield off and set aside.
3. Lift the foam pad away from the detached blower, the foam pad holder will also lift away from the blower.
4. Remove the foam pad from the foam pad holder and set the foam pad holder to the side. Clean the foam pad in warm soapy water or brush debris away. Allow foam pad to dry.
5. Examine foam pad for reuse. If you need to replace it, check the service part section of this manual.

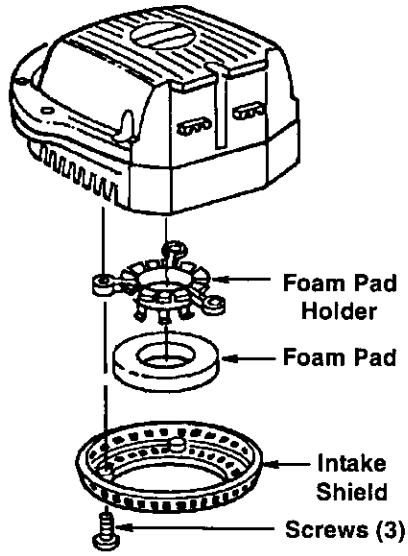

6. Replace foam pad holder on blower with the tabs away from the blower. Reinstall foam pad under the tabs of the holder.
7. Reinstall intake shield and 3 screws.

The unit is ready for use.

Maintenance (continued)

Cleaning Vac Filter

Your filter should be cleaned often to maintain peak vac performance.

Be sure to dry the filter before storing or picking up dry debris.

IMPORTANT: After cleaning, check the filter for tears or small holes. Do not use a filter with holes or tears in it. Even a small hole can cause a lot of dust to come out of your vac. Replace it immediately.

NOTE: This filter is made of high quality paper designed to stop very small particles of dust. The filter can be used for wet or dry pick up. Handle the filter carefully when removing to clean or installing it. Creases in the filter pleats may occur from installation but creases will not affect the performance of the filter.

Removal

To remove the filter for cleaning or replacement, remove filter nut from the screw on the filter cage, remove filter plate and lift off filter.

IMPORTANT: To reduce the risk of damage to the blower wheel and motor, always reinstall the filter before using the vac for dry material pickup.

CAUTION: Do not remove the filter cage or float. It is there to shut off airflow when the drum is full of liquids.

Dry Filter

1. Some removal of dry debris can be accomplished without removing the filter from the vac by slapping your hand on top of the lid while the vac is turned off.
2. For best results of cleaning due to accumulated dust, clean the filter in an open area. Cleaning SHOULD be done outdoors and not in the living quarters.
3. After filter removal from vac, remove the dry debris by gently tapping the filter against the inside wall of your dust drum and the debris will loosen and fall.
4. For thorough cleaning of dry filter with fine dust (no debris), you may run water through it as described under "Wet Filter".

Wet Filter

After filter is removed, run water through the filter from a hose or spigot. Take care that water pressure from the hose is not strong enough to damage filter. Remember: To dry a filter quickly, reinstall the filter on the vac and allow the unit to run for approximately 10 minutes. The clean air rushing through the filter will dry it.

Installation

Refer to "Filter Assembly".
Allow the filter to dry before reinstalling and storing the vac.

Wet/Dry Vac

To keep your Wet/Dry Vac looking its best, clean the outside with a cloth dampened with warm water and mild soap.

To clean the drum:

1. Dump debris out.
2. Wash drum thoroughly.
3. Wipe out with dry cloth.

WARNING: To assure product SAFETY and RELIABILITY, repairs and adjustment should be performed by Sears Service Centers, always using Sears replacement parts.

Wet Nozzle

To pick up liquids off a smooth surface, use the 2-1/2" wet nozzle accessory supplied with your wet/dry vac. To use this nozzle, simply attach the nozzle to the end of an extension wand.

Connect a second extension wand to the first, and connect the 2-1/2" x 7' hose to the extension wand.

Liquids may be picked up by dragging the nozzle across the surface. The squeegee will dry the surface as you vacuum.

Replacement rubber for the squeegee nozzle may be obtained through Sears Parts. If the rubber becomes worn, it may be flipped over for use on the opposite side or replaced. (Replacement service part #822256). To reverse or replace the squeegee:

1. Lay the wet nozzle on a flat surface with the round inlet opening facing up and the two latches close to you as shown.

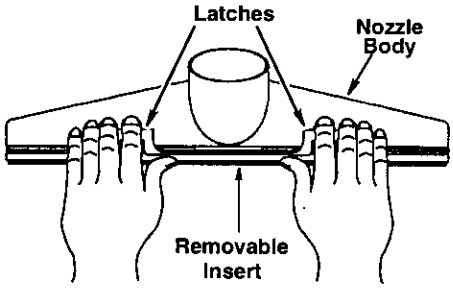

2. Using both hands, position each thumb on the removable insert, (below the latches) and two fingers of each hand on each latch, lift and disengage the two latches from the tabs on the nozzle body.
3. Gently pull the latches toward yourself to remove the insert.

To reinstall the removable insert correctly, follow these steps:

1. Place the removable insert on a flat surface with the pins positioned upward and the latches close to you as shown. Place the rubber squeegee on the insert, with the pins fitting through the matching holes in the squeegee. (Make sure the new working edge is located farthest from you.)

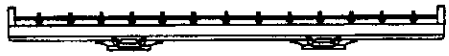

2. Using both hands, lower the nozzle body onto the insert and squeegee with the round opening of the nozzle closest to you. With fingers on the far side and thumbs holding the latches of the removable insert, flip the nozzle over so the latches are on the top and the round inlet opening is facing away from you. Make sure the squeegee stays on the insert pins.

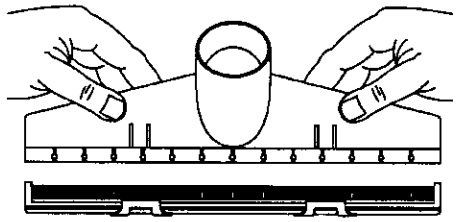

3. Press down with each thumb below the latching tabs until you see and hear the removable insert snap into the nozzle body. Snap the latches over the locking tabs into their original position.

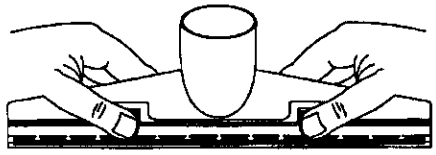

4. Inspect the pins of the insert to make sure they fit through the holes of the squeegee and fit into the matching slots in the nozzle body.

   NOTE: If the pins are out position, hold the nozzle assembly with both hands and gently twist in opposite directions. The insert pins should snap into proper position.

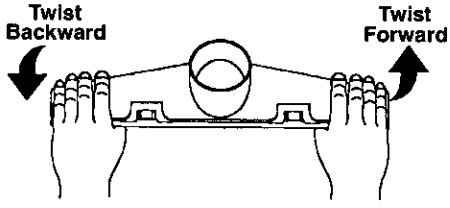

The wet nozzle assembly is ready for wet pickup use.

Repair Parts

16 Gallon Wet/Dry Vac With Detachable Blower
Model Number 113.170370

Always order by Part Number - Not by Key Number

WARNING

SERVICING OF DOUBLE-INSULATED WET/DRY VAC

In a double-insulated Wet/Dry Vac, two systems of insulation are provided instead of grounding. No grounding means is provided on a double-insulated appliance, nor should a means for grounding be added. Servicing a double-insulated Wet/Dry Vac requires extreme care and knowledge of the system, and should be done only by qualified service personnel. Replacement parts for a double-insulated Wet/Dry Vac must be identical to the parts they replace. Your double-insulated Wet/Dry Vac is marked with the words "DOUBLE INSULATED" and the symbol ⧈ (square within a square) may also be marked on the appliance.

Key No.	Part No.	Description
1	509238	Cage Filter/Float
2	9-17816	† Filter (Red Stripe)
3	9-16937	† Filter Plate
4	9-16938	† Filter Nut
5	826286	Drum
6	73185	Drain Cap
7	822479	Wheel
8	826285	Accessory Caddy
9	73102	Caster
10	826387	Drum Latch
11	826386	Lid
12	822442-1	Gasket Lid
13	826388	Power Head Latch
14	820563-7	* Screw Pan Hd. Ty AB #10 x 3/4
15	826383	Intake Shield
16	826411	Foam Pad
17	826389	Foam Pad Holder
18	822467-10	Cord w/Plug
19	826382	Detachable Lid
20	823871	Rocker Switch
21	816345-1	Nut-Hex Flange 1/4-20
22	15534-1	Washer
23	818413	Blower Wheel
24	818961	Spacer
25	822459-1	Collector Gasket
26	826404	Motor (Includes Key Nos.21, thru 24)
27	822482	Blower Adapter
28	826385	Motor Cover
29	815096	Hose Adapter
30	826356-1	† Hose 2 1/2" x 7' (Includes Key Nos. 29 thru 32)
31	826355	Spring Tab
32	826354	Hose End Interlock
33	822256	Squeegee
—	SP6464	Owners Manual (Not illustrated)

† Stock Item - May be secured through the hardware department of most Sears retail stores.

* Standard Hardware Item - May be purchased locally

Repair Parts

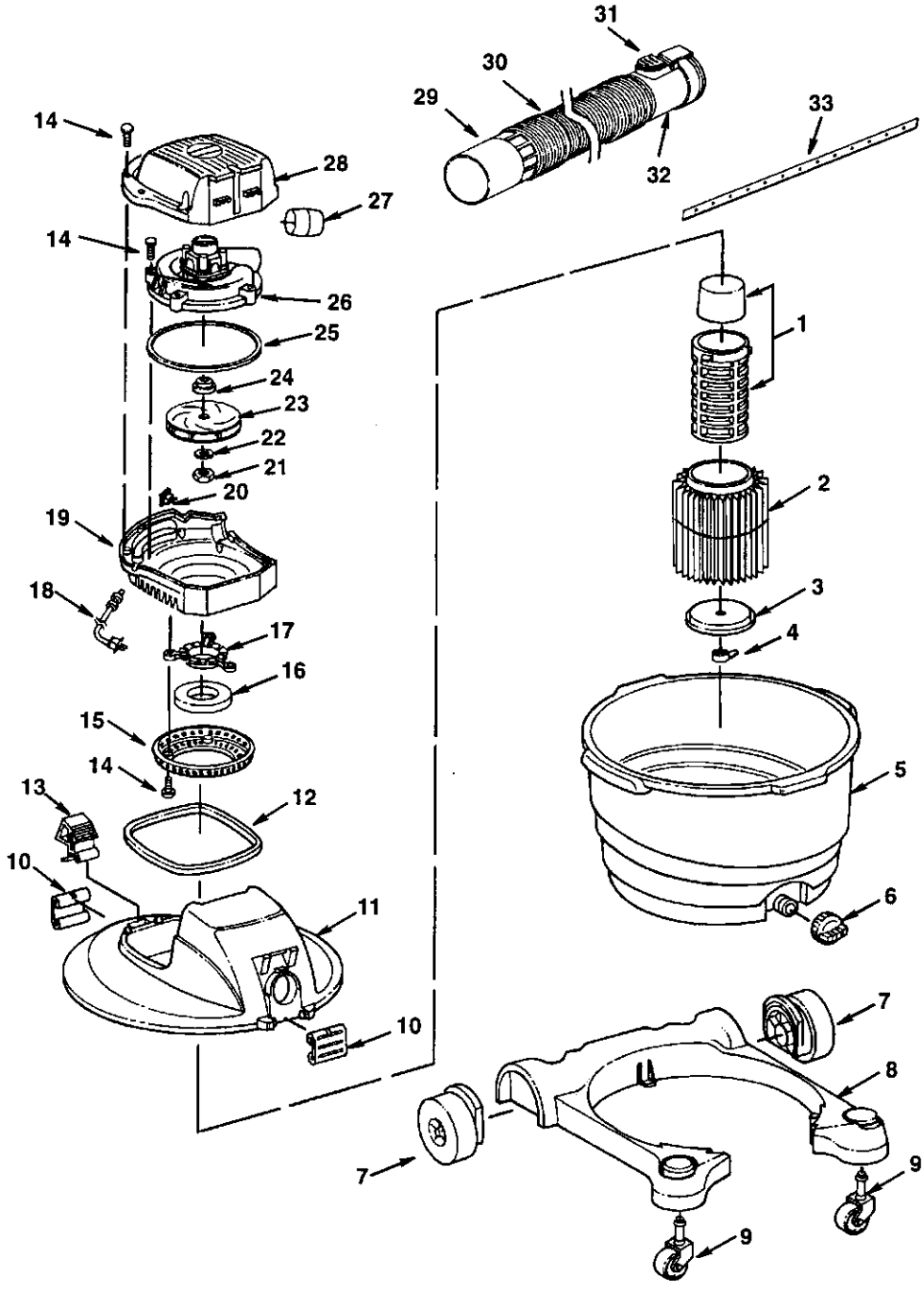

CRAFTSMAN®

Accessories and Attachments

Get more versatility from your Craftsman wet/dry vacuum by adding these accessories.

Additional wet/dry vac accessories may be purchased at your local Sears retail store or Sears/Craftsman Power and Hand Tool Catalog.

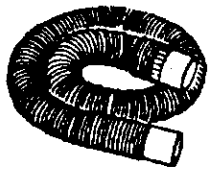

17820 2-1/2"x7' Hose



16964 Extension Wands

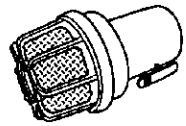

16993
Noise Muffler

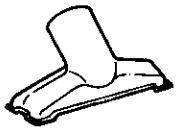

16922 Utility Nozzle

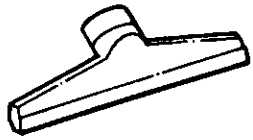

17817 Wet Nozzle



16925 Dry Nozzle

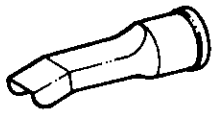

16978 Car Nozzle

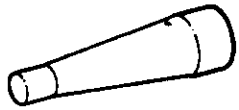

16933 Blower Nozzle



16902 Crevice Tool



16915 Multipurpose
Floor Tool

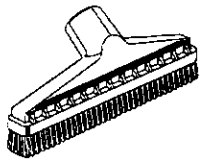

16926 14" Floor
Brush



16901 Dusting
Brush



16947, 16948
Inflator Nozzle

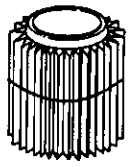

17816 Paper Pleated
Filter

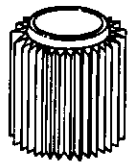

17916 High Efficiency
Filter

NOTE: Most Accessories Are Available In 2-1/2 Inch And 1-1/4 Inch Sizes

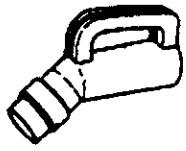

16934 Hose Grip



16917 Hose Connector



16930 Hose Lock



16935 Gutter Nozzle

Sawdust Collection Series

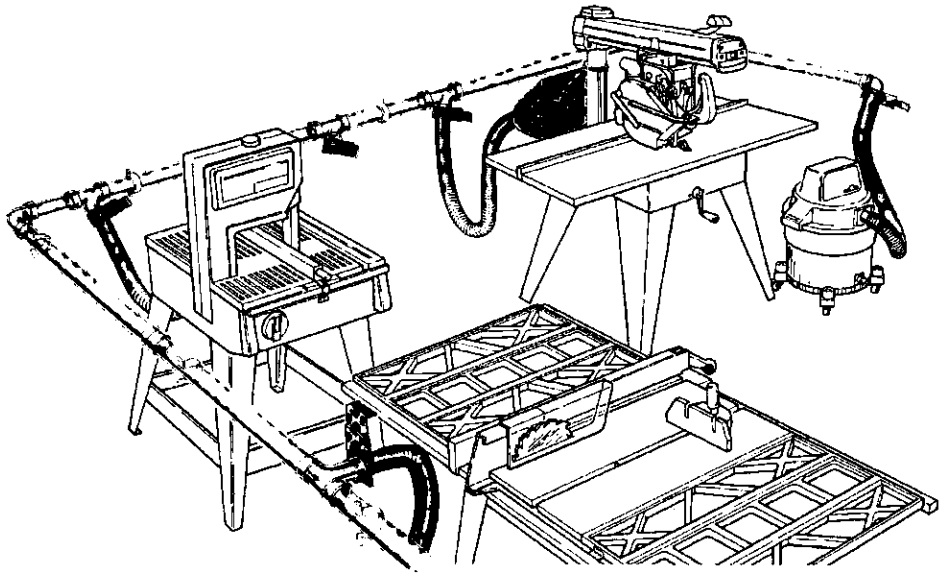

Whole-shop Sawdust Manifold-Type Collection System
29964

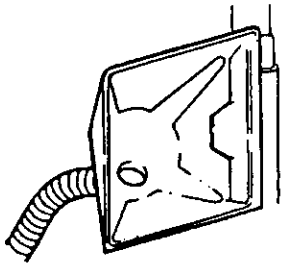

Radial Arm Saw
Dust Collection Kit
29963

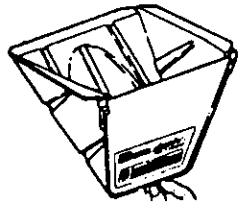

Table Saw Dust
Collection Kit
29962

For in-home major brand repair service:
Call 24 hours a day, 7 days a week

1-800-4-MY-HOME (1-800-469-4663)

Para pedir servicio de reparación a domicilio – 1-800-676-5811

For the repair or replacement parts you need:
Call 6 am – 11 pm CST, 7 days a week

PartsDirect

1-800-366-PART (1-800-366-7278)

Para ordenar piezas con entrega a domicilio – 1-800-659-7084

For the location of a Sears Parts and Repair Center in your area:
Call 24 hours a day, 7 days a week

1-800-488-1222

For information on purchasing a Sears Maintenance Agreement or to inquire about an existing Agreement:
Call 9 am – 5 pm, Monday – Saturday

1-800-827-6655

SEARS
HomeCentral℠

The model and serial numbers will be found on the handle.
When requesting service or ordering parts, always provide the following information:

- **Product Type**
- **Part Number**
- **Model Number**
- **Part Description**

© 2003 Emerson
Sears, Roebuck and Co., Hoffman Estates, IL. 60179 U.S.A.

Part No. SP6516 Form No. SP6516 Printed in U.S.A. 3/03