RCC SERIES
Cove Heater Gen II (NEW!)



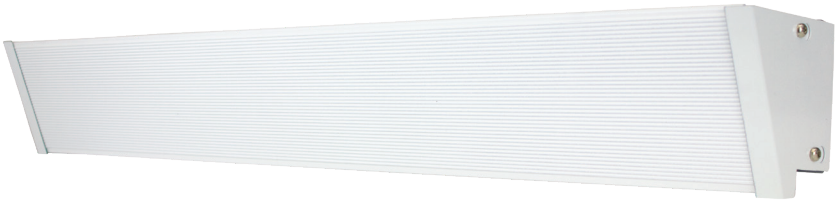

Technical Specifications:

Length: 24” - 118”
Output: 210-1800 watts

Ideal Spaces:

Offices & Retail Spaces
Hallways & Lobbies
Conference Rooms
Day Care Centers
Assisted Living Facilities
Laboratories
Living Rooms & Kitchens
Bathrooms & Basements

Beige White

- Ideal for primary or supplemental comfort heat
- Perfect where wall space is limited and gentle heat is desired
- Provides clean, gentle, comfortable heat while allowing full usage of wall and floor spaces
- No noise. No moving parts. No maintenance. No ceilings, walls or drapes to clean. No dry air
- Extruded aluminum front panel provides a high efficiency, radiating surface
- Easy surface-mount installation
- Simple & Fast One-Person Installation
- Universal Junction Box: Feed power to either end of heater
- Ribbed front for maximum surface radiation
- 1/2” diameter knockouts for 1/2” conduit
- Open on top and bottom for maximum convection heating room air
- Element wattage density of approximately 150 watts per linear foot
- Full length back case construction of electrogalvanized steel with baked enamel finish.

c UL us

5 YEAR WARRANTY ELEMENT

2 YEAR WARRANTY WORKMANSHIP

RCC SERIES
Cove Heater

Scan the QR code to access additional specs and features

Models & Specifications:

ITEM INFORMATION			ELECTRICAL DATA				DIMENSIONAL DATA	
	CATALOG NO.	UPC	VOLTS	WATTS	BTU/HR.	AMPS	LENGTH	SHIP WT.
◆	RCC2501-W	685360186764	120	210	716.5	1.8	24"	5.5 lbs.
◆	RCC4501-W	685360186788	120	420	1433	3.5	34"	6.7 lbs.
◆	RCC6001-W	685360186801	120	560	1910.7	4.7	47"	9.3 lbs.
◆	RCC7501-W	685360186825	120	700	2388.4	5.8	59"	11.2 lbs.
◆	RCC9001-W	685360186849	120	840	2866.1	7	71"	13.1 lbs.
◆	RCC10501-W	685360186863	120	935	3190.2	7.8	83"	15.3 lbs.
◆	RCC12001-W	685360186887	120	1125	3838.5	9.4	94"	16.8 lbs.
◆	RCC15001-W	685360186900	120	1400	4776.8	11.7	118"	26 lbs.
◆	RCC4508-W	685360186924	208	420	1433	2	34"	6.7 lbs.
◆	RCC6008-W	685360186948	208	560	1910.7	2.7	47"	9.3 lbs.
◆	RCC7508-W	685360186962	208	700	2388.4	3.4	59"	11.2 lbs.
◆	RCC9008-W	685360186986	208	840	2866.1	4	71"	13.1 lbs.
◆	RCC10508-W	685360187006	208	935	3190.2	4.5	83"	15.3 lbs.
◆	RCC12008-W	685360187020	208	1125	3838.5	5.4	94"	16.8 lbs.
◆	RCC15008-W	685360187044	208	1400	4776.8	6.7	118"	21.2 lbs.
◆	RCC18008-W	685360187068	208	1800	6141.6	8.7	118"	21.2 lbs.
◆	RCC4502-W	685360187082	240/208	420/315	1433/1074.8	1.8/1.5	34"	6.7 lbs.
◆	RCC6002-W	685360187105	240/208	560/420	1910.7/1433	2.3/2.0	47"	9.3 lbs.
◆	RCC7502-W	685360187129	240/208	700/525	2388.4/1791.3	2.9/2.5	59"	11.2 lbs.
◆	RCC9002-W	685360187143	240/208	840/630	2866.1/2149.6	3.5/3.0	71"	13.1 lbs.
◆	RCC10502-W	685360187167	240/208	935/701	3190.2/2391.8	3.9/3.4	83"	15.3 lbs.
◆	RCC12002-W	685360187181	240/208	1125/844	3838.5/2879.7	4.7/4.0	94"	16.8 lbs.
◆	RCC15002-W	685360187204	240/208	1400/1050	4776.8/3582.6	5.8/5.0	118"	26 lbs.
◆	RCC18002-W	685360187228	240/208	1800/1350	6141.6/4606.2	7.5/6.5	118"	26 lbs.

SKU Legend: ◆ **= Popular Products** (Contact your local Marley Sales Representative for typically associated lead times)
For Beige, replace the W suffix to catalog number with an N (i.e. RCC2501-N)

RCC SERIES
Cove Heater

Dimensions and Clearances:

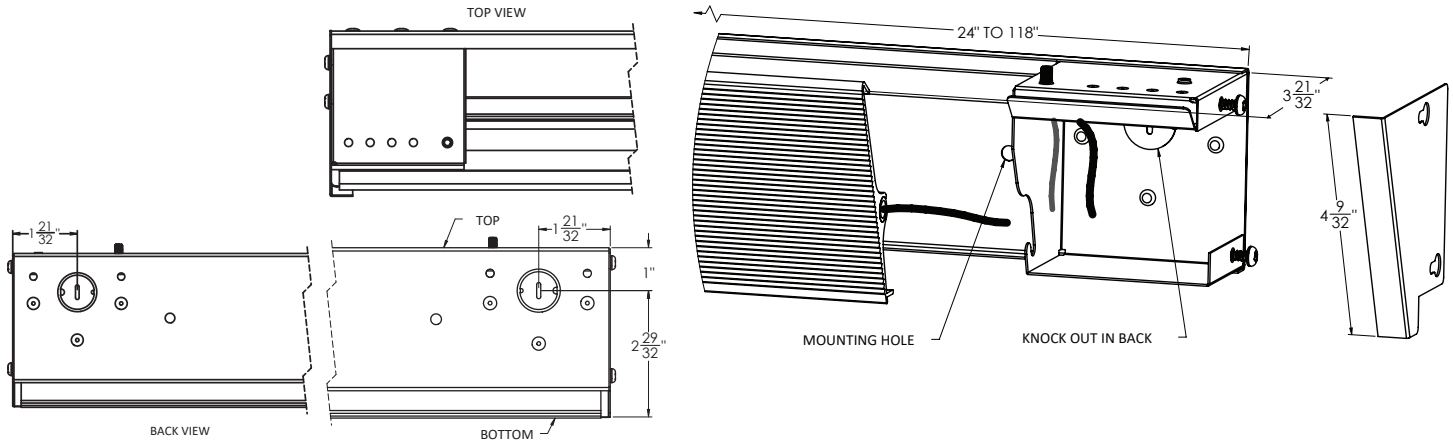

Heaters are not to be mounted closer than 2½" from drywall ceiling or 6" from vinyl or drop ceiling. Heaters to be mounted at least 6 feet from floor.

Installers are recommended to wear clean gloves when installing the front covers; reducing the transfer of oil and debris prior to start up.

Optional Accessories:

CATALOG NO.	UPC	DESCRIPTION	SHIP WT.
RXT-SPL-W	685360187242	ACCY SP STAT LH SIDE WHT	0.25 lbs.
RXT-SPR-W	685360187266	ACCY SP STAT RH SIDE WHT	
RXT-DPL-W	685360187280	ACCY DP STAT LEFT WHT	
RXT-DPR-W	685360187303	ACCY DP STAT RIGHT WHT	
RXT-DPLTP-W	685360187464	ACCY DP TP STAT, LH, WHT	
RXT-DPRTP-W	685360187310	ACCY DP TP STAT, RH, WHT	

For Beige, replace the W suffix to catalog number with an N (i.e. RCC2501-N)
When selected, all thermostat options will add 3-1/4" to the length of the unit.