Marley
Engineered Products

N Series Overhead Infrared Heaters



Installation & Maintenance Instructions

Dear Owner,

Congratulations! Thank you for purchasing this new heater by Marley Engineered Products. You have made a wise investment selecting the highest quality product in the heating industry. Please carefully read the installation and maintenance instructions shown in this manual. You should enjoy years of efficient heating comfort with this product from Marley Engineered Products... the industry's leader in design, manufacturing, quality and service.

... The Employees of
Marley Engineered Products

WARNING

Read Carefully - This instruction sheet contains vital information for the proper installation, use and efficient operation of the heater. Carefully read the manual before installation, operation, or cleaning of the heater. Failure to adhere to the instructions could result in fire, electric shock, death, serious personal injury or property damage. Save these instructions and review frequently for continuing safe operation and instructing future users.

RISK OF FIRE, ELECTRICAL SHOCK OR FALLING:

1. To prevent electrical shock, disconnect all power coming to heater at main service panel before wiring or servicing.
2. All wiring must be in accordance with the National and Local Electrical Codes and the heater must be grounded as a precaution against possible electric shock.
3. Verify the power supply voltage coming to heater matches the ratings printed on the heater nameplate before energizing.
4. This heater is NOT suitable for use in hazardous locations as described by the National Fire Protection Association (NFPA). This heater has hot and arcing or sparking parts inside. DO NOT use in areas where gasoline, paint or other flammable liquids or stored.
5. Do not use this heater in areas where corrosive agents such as Ammonia • Carbon tetrachloride • Sulphuric acid • Muriatic Acid • Ethylene Dichloride (Mastics-Glues-Adhesives) • Chlorine • Chlorides • Fluorides • Perchlorethylene • Trichlorethylene • Hydrochloric Acid • Halogenated Hydrocarbons • Industrial Caustics.
6. This heater is intended for ceiling installation ONLY. The following clearances MUST be maintained:
   a) Top of heater to ceiling - 3 in (76 mm).
   b) Bottom of heater to floor - 10 ft (3048 mm).
   c) Side of heater to wall - 12 in (305 mm).
   d) End of heater to wall - 12 in (305 mm).
   e) Side of heater to side of adjacent heater - 36 in (914 mm).
   f) End of heater to end of adjacent heater - 36 in (914 mm).
7. Heater MUST be securely fastened to the building structure to prevent it from falling.
8. DO NOT stack or store combustible materials in the radiation path under the heater. At least 5 feet (1524 mm) clearance MUST be maintained between bottom of heater and combustibles stored.
9. Do NOT use as a residential or household heater.

SAVE THESE INSTRUCTIONS

SPECIFICATIONS								
Model Number	Volts	Watts	Amps	BTU	Dimensions A Length	Dimensions B Width	Dimensions D Depth	Wire Ga. (Min.)
N1011B N1081B N1021B	120 208 240	1000	8.3 4.8 4.2	3412	27.125” (689 mm)	8.375” (212 mm)	3.5” (88.9)	14 Ga.
N1511B N1581B N1521B N1571B N1531B	120 208 240 277 347	1500	12.5 7.2 6.3 5.4 4.3	5118	35.625” (905 mm)	8.375” (212 mm)	3.5” (88.9)	14 Ga.
N2001B N2021B N2071B N2031B	208 240 277 347	2000	9.6 8.3 7.2 5.8	6824	46.625” (1184 mm)	8.375” (212 mm)	3.5” (88.9)	14 Ga.
N2501B N2521B N2571B N2531B	208 240 277 347	2500	12.0 10.4 9.0 7.2	8530	53.375” (1356 mm)	8.375” (212 mm)	3.5” (88.9)	14 Ga.

INSTALLATION

The Marley Engineered Products N Series radiant heater is shipped fully assembled. The heater can be hung from the ceiling by chains or rigid angle brackets attached to the heater
brackets located on the back of the heater. Hanging chain kits are available for these heaters that will allow for installations to 6 feet from the ceiling.) (**Model MHK**)
Minimum spacings:

Ceiling to top of heater is 3 in.
Wall to sides of heater is 12 in.
Floor to bottom of heater is 10 feet.

⚠ CAUTION ⚠

Installer should consult state and local codes and meet any applicable requirements regarding the installation.

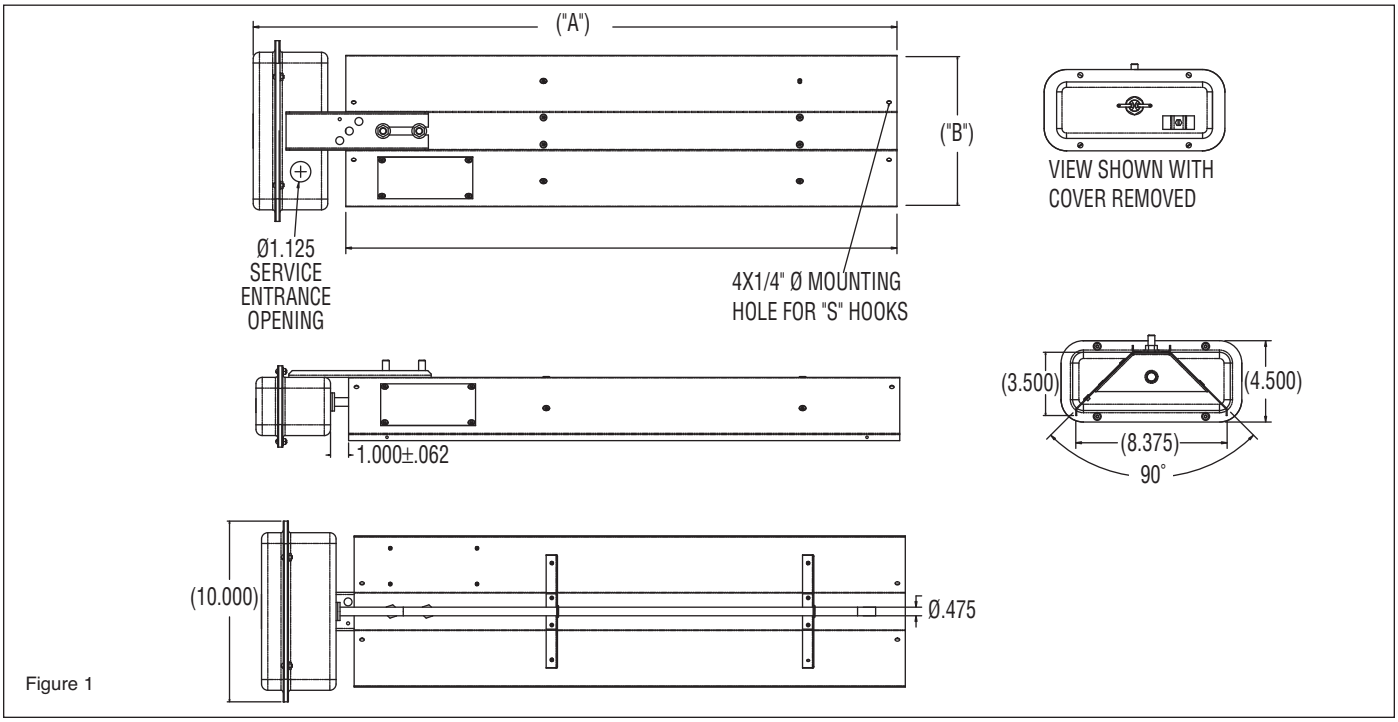

Figure 1

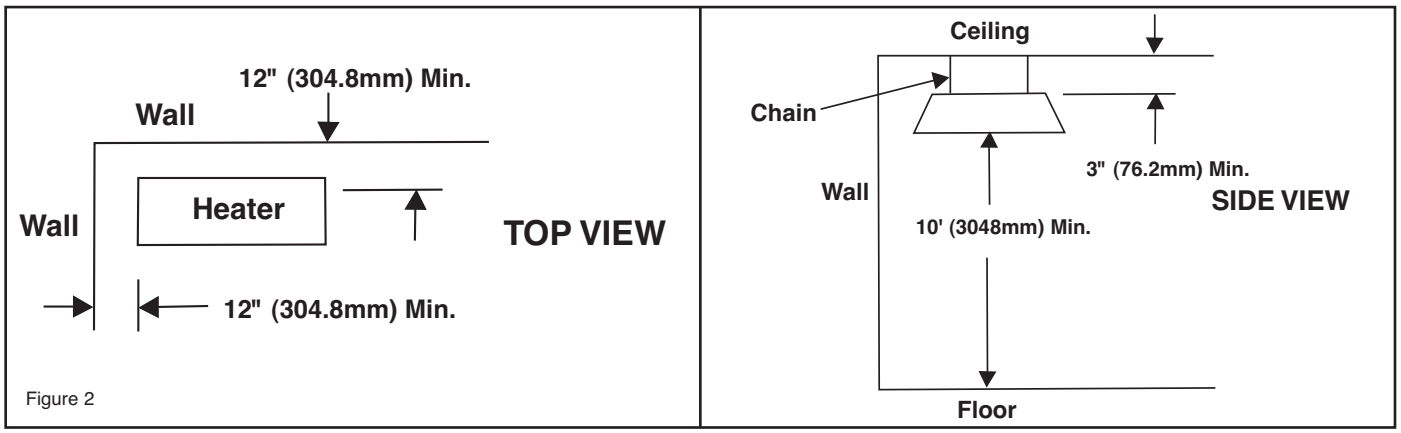

Figure 2

WIRING

WARNING

ELECTRIC SHOCK HAZARD. Disconnect all power before installing or servicing heater. Failure to do so could result in personal injury or property damage. Heater must be effectively grounded in accordance with the National Electrical Code, NFPA 70.

WARNING

All electrical wiring must be done by a qualified person in accordance with National Electrical Code (NEC) and meet all state and local regulations.

1. Use heater only at the voltage specified on the nameplate.
2. Branch circuit wire for connection to heater must be at least 90°C wire. Use copper conductors only.
3. The heater connection points are located in the gasketed terminal enclosure. To remove cover, remove 4 screws on the cover. Remove the cover to expose wiring connection points.
4. A green ground terminal is provided in the bottom of the enclosure. The ground wire should be connected before other connections are made.
5. Refer to Table 1 for proper entrance wiring size.
6. Heater can be wired with rigid or flexible conduit.

Grill Kit Selection Guide

Model	Volts	Watts	Optional Grill Kit
N1011B	120	1000	NWG01
N1081B	208	1000	
N1021B	240	1000	
N1511B	120	1500	NWG105
N1581B	208	1500	
N1521B	240	1500	
N1571B	277	1500	
N1531B	347	1500	
N2001B	208	2000	NWG200
N2021B	240	2000	
N2071B	277	2000	
N2031B	347	2000	
N2501B	208	2500	NWG250
N2521B	240	2500	
N2571B	277	2500	
N2531B	347	2500	

Hanging Kit for All Models: MHK

MAINTENANCE

WARNING

ELECTRIC SHOCK HAZARD. Disconnect all power before servicing or replacing heating elements.

The reflectors should be kept clean to obtain the maximum radiant output.

Element Replacement

1. Remove Terminal Box Cover.
2. Disconnect lead wires from heater terminals and disengage box from conduit /cable fitting.
3. Remove safety grills (if installed).
4. Loosen (2) 3/8" nuts from the terminal box bracket located on the back of the heater and slide the entire heating element assembly out of the reflector assembly.
5. Remove bulkhead fitting nut and washers.
6. Remove failed element and replace with a new element.
7. Place gasket on the bulkhead fitting and insert terminals and fitting into the element hole in the terminal box.
8. Place washer and nut on the bulkhead fitting and tighten.
9. Reassemble by following the reverse procedures (steps 4 through 1)

Replacement Parts

Model	Volts	Watts	Element
N1011B	120	1000	322-074905-143
N1081B	208	1000	322-074905-144
N1021B	240	1000	322-074905-145
N1511B	120	1500	322-074905-148
N1581B	208	1500	322-074905-149
N1521B	240	1500	322-074905-150
N1571B	277	1500	322-074905-151
N1531B	347	1500	322-074905-152
N2001B	208	2000	322-074905-153
N2021B	240	2000	322-074905-154
N2071B	277	2000	322-074905-155
N2031B	347	2000	322-074905-156
N2501B	208	2500	322-074905-157
N2521B	240	2500	322-074905-158
N2571B	277	2500	322-074905-159
N2531B	347	2500	322-074905-160

LIMITED WARRANTY

All products manufactured by Marley Engineered Products are warranted against defects in workmanship and materials for one year from date of installation. This warranty does not apply to damage from accident, misuse, or alteration; nor where the connected voltage is more than 5% above the nameplate voltage; nor to equipment improperly installed or wired or maintained in violation of the product's installation instructions. All claims for warranty work must be accompanied by proof of the date of installation.

The customer shall be responsible for all costs incurred in the removal or reinstallation of products, including labor costs, and shipping costs incurred to return products to Marley Engineered Products Service Center.Within the limitations of this warranty, inoperative units should be returned to the nearest Marley authorized service center or the Marley Engineered Products Service Center, and we will repair or replace, at our option, at no charge to you with return freight paid by Marley. It is agreed that such repair or replacement is the exclusive remedy available from Marley Engineered Products.

THE ABOVE WARRANTIES ARE IN LIEU OF ALL OTHER WARRANTIES EXPRESSED OR IMPLIED, AND ALL IMPLIED WARRANTIES OF MERCHANTABILITY AND FITNESS FOR A PARTICULAR PURPOSE WHICH EXCEED THE AFORESAID EXPRESSED WARRANTIES ARE HEREBY DISCLAIMED AND EXCLUDED FROM THIS AGREEMENT. MARLEY ENGINEERED PRODUCTS SHALL NOT BE LIABLE FOR CONSEQUENTIAL DAMAGES ARISING WITH RESPECT TO THE PRODUCT, WHETHER BASED UPON NEGLIGENCE, TORT, STRICT LIABILITY, OR CONTRACT.

Some states do not allow the exclusion or limitation of incidental or consequential damages, so the above exclusion or limitation may not apply to you. This warranty gives you specific legal rights, and you may also have other rights which vary from state to state.

For the address of your nearest authorized service center, contact Marley Engineered Products in Bennettsville, SC, at 1-800-642-4328. Merchandise returned to the factory must be accompanied by a return authorization and service identification tag, both available from Marley Engineered Products. When requesting return authorization, include all catalog numbers shown on the products.

HOW TO OBTAIN WARRANTY SERVICE AND WARRANTY PARTS PLUS GENERAL INFORMATION

1. Warranty Service or Parts **1-800-642-4328**
2. Purchase Replacement Parts **1-800-654-3545**
3. General Product Information **www.marleymep.com**

Note: When obtaining service always have the following:
1. Model number of the product
2. Date of manufacture
3. Part number or description

Marley Engineered Products

470 Beauty Spot Rd. East
Bennettsville, SC 29512 USA

ECR 38770

Part No. 5200-2649-001

06/10