Marley
Engineered Products

L Series
Hand Carry Portable Radiant Heaters

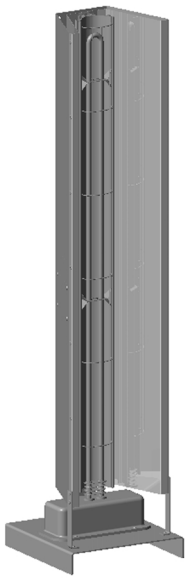

Installation & Maintenance Instructions

Dear Owner,

Congratulations! Thank you for purchasing this new heater by Marley Engineered Products. You have made a wise investment selecting the highest quality product in the heating industry. Please carefully read the installation and maintenance instructions shown in this manual. You should enjoy years of efficient heating comfort with this product from Marley Engineered Products... the industry's leader in design, manufacturing, quality and service.

... The Employees of Marley Engineered Products

⚠ WARNING ⚠

Read Carefully - This Instruction Sheet Contains Vital Information For The Proper Assembly, Set-Up And Efficient Operation Of The Heater. Carefully Read The Manual Before Assembly, Operation, Or Cleaning Of The Heater. Failure To Adhere To The Instructions Could Result In Fire, Electrical Shock, Property Damage, Serious Personal Injury, Or Death. Save These Instructions And Review Frequently For Continuing Safe Operation And Instructing Future Users.

1. To prevent a possible electrical shock, disconnect all power coming to heater at main service panel before wiring or servicing.
2. All wiring must be in accordance with the National and Local Electrical Codes and the heater must be grounded as a precaution against possible electrical shock.
3. Verify the power supply voltage coming to the heater matches the ratings printed on the heater nameplate before energizing.
4. This heater is NOT suitable for use in hazardous locations as described by the National Fire Protection Association (NFPA). This heater has hot and arcing or sparking parts inside. Do NOT use in areas where gasoline, paint or other flammable liquids are used or stored.
5. This heater is intended to provide temporary, supplemental localized heat only in non-residential locations. The heater is intended for use on the floor only. Do NOT place heater on surface where is could fall or tip over.
6. Heater element operates at very hot temperatures. Do NOT place heater near combustibles and DO NOT place combustibles in the radiation path in front of the heater. Keep all combustibles at least five (5) feet from front of heater.
7. Heater is designed and intended for use as illustrated in this instruction sheet only. Do not position or use heater in any other manner.
8. This heater is hot when in use. To avoid burns, do NOT let bare skin touch hot surfaces. Keep combustible materials, such as furniture and papers at least 5 feet from the front of the heater.
9. DO NOT LEAVE HEATER UNATTENDED WHILE IN OPERATION.
10. Always disconnect heater when not in use.
11. Do NOT use outdoors in areas subject to wind.
12. Connect to properly grounded outlets or building ground.
13. This heater has hot surfaces. Do NOT use it in areas where gasoline, paint or flammable liquids are used or stored.
14. Use this heater only as described in this manual. Any other use not recommended by the manufacturer may cause fire, electric shock or injury to persons.
15. In order to prevent equipment damage, protect with a ground fault device such as Marley Engineered Products WMGF240 for 240V heaters and WMGF480 for 480V heaters.

SAVE THESE INSTRUCTIONS

WIRING

WARNING

ELECRIC SHOCK HAZARD. Disconnect all power before installing or servicing heater. Failure to do so could result in personal injury or property damage. Heater must be effectively grounded in accordance with the National Electrical Code, NFPA 70.
All electrical wiring must be done by a qualified person in accordance with National Electrical Code (NEC) and meet all state and local regulations.

1. Use heater only at the voltage specified on the nameplate.
2. The heater connection points are located in the gasketed terminal enclosure. To remove cover, remove screw(s) on the cover. Remove the cover to expose wiring connection points.
3. A green ground terminal is provided in the bottom of the enclosure. The ground wire should be connected before other connections are made.
4. Use type "SO" or equal cord. Refer to Table 1 for proper cord gage and number of conductors.

OPTIONAL ACCESSORIES

Marley Engineered Products L series radiant heaters can be field modified by adding optional kits.

Cord Kits

Cord kits consist of 25 feet of 90°C cable and a right angle cord fitting which can connect directly to the heater terminal box or disconnect switch (if used). See instruction sheet 5200-2647-### for details

Plugs

Single and three phase with ground. Available in nonlocking and locking. See Table 1.

Ground Fault Kits

WMGF240 series kit mounts to wall that de-energizes the heater prior to element failure. See instruction sheet 5200-2652-###.

Table 1 - Hand Carry Portable- L Series

Model	Wattage	Volts	Amps	Cord Guage	Cord Set	Locking Plug Set	Non-Locking Plug Set
L1511B	1500	120	12.5	See Note	See Note	See Note	
Note: This hand carry model includes cord and standard 3-prong gounded plug.							
L2081B		208	9.6	14/3	CS25143	LPS25124	NPS25650
L2021B		240	8.3	14/3	CS25143	LPS25124	NPS25650
L2071B	2000	277	7.2	14/3	CS25143	LPS25124	N/A
L2041B		480	4.2	14/3	CS25143	LPS25104	N/A
L2061B		600	3.3	14/3	CS25143	LPS25083	N/A
L4581B		208	21.6	12/3	CS25123	LPS25103	NPS25650
L4521B		240	18.8	12/3	CS25123	LPS25124	NPS25650
L4571B	4500	277	15.9	14/3	CS25143	LPS25124	N/A
L4541B		480	9.4	14/3	CS25143	LPS25104	N/A
L4561B		600	7.5	14/3	CS25143	LPS25083	N/A

MAINTENANCE

WARNING

ELECRIC SHOCK HAZARD. Disconnect all power before servicing or replacing heating elements.

The heater requires no special maintenance other than occasional cleaning to prevent excess accumulation of dust and lint on surfaces. It is important for the reflectors to be kept clean to obtain the maximum radiant output. If used as a movable unit, the cart and cord should be checked periodically to make sure the hardware remains tight and cart and cord are not damaged. Do not continue to use the heater if damaged.

Element Replacement (Contact Factory for Part Number.)

1. Remove Terminal Box Cover.
2. Disconnect lead wires from heater terminals.
3. Remove safety grilles.
4. Remove retainer screw located on the reflector at the terminal end.
5. Loosen (2), 3/8" nuts from the terminal box bracket located on the back of the heater and slide the entire heating element assembly out of the reflector assembly.
6. Remove wires and jumper straps as required to replace the failed heating element(s).
7. Remove bulkhead fitting nuts and washers.
8. Remove failed element and replace with a new element. **Replace only with Marley Engineered Products elements. Use of other elements will cause excess temperatures inside terminal box.**
9. Place gasket on the bulkhead fitting and insert terminals and fittings into the element holes in the terminal box.
10. Place washers and nuts on bulkhead fittings and tighten.
11. Replace wiring and jumper straps.
12. Reassemble by following the reverse procedures (steps 5 through 1)

DIMENSIONS

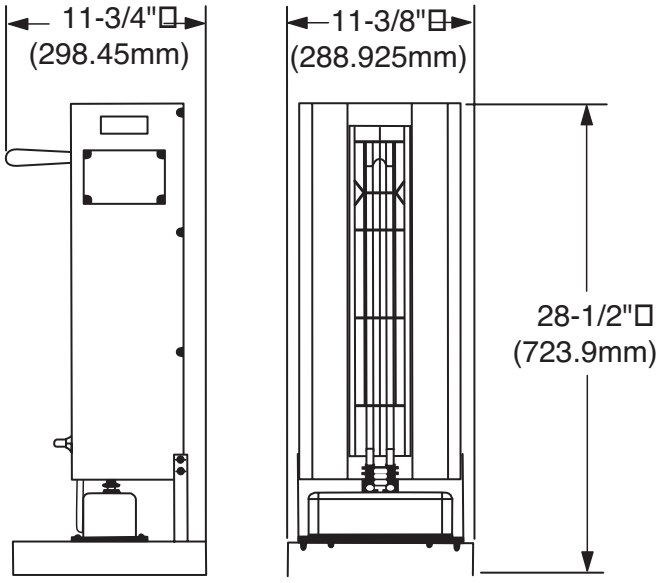

1.5 & 2.0 KW

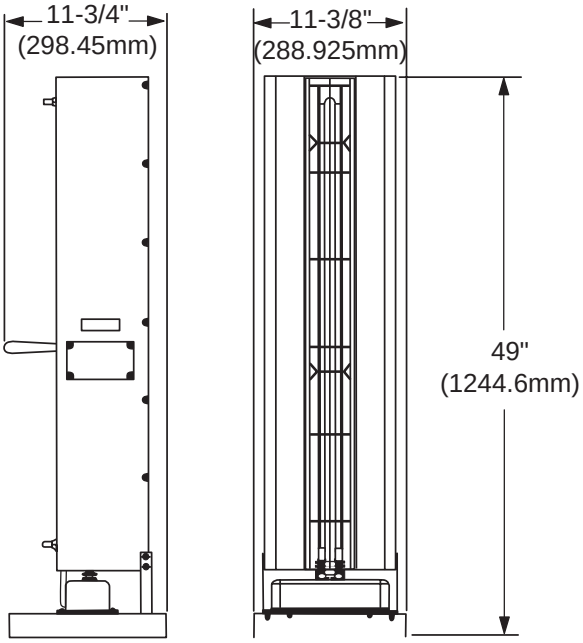

4.5 KW

LIMITED WARRANTY

All products manufactured by Marley Engineered Products are warranted against defects in workmanship and materials for one year from date of installation, except heating elements which are warranted against defects in workmanship and materials for five years from date of installation. This warranty does not apply to damage from accident, misuse, or alteration; nor where the connected voltage is more than 5% above the nameplate voltage; nor to equipment improperly installed or wired or maintained in violation of the product's installation instructions. All claims for warranty work must be accompanied by proof of the date of installation.

The customer shall be responsible for all costs incurred in the removal or reinstallation of products, including labor costs, and shipping costs incurred to return products to Marley Engineered Products Service Center. Within the limitations of this warranty, inoperative units should be returned to the nearest Marley authorized service center or the Marley Engineered Products Service Center, and we will repair or replace, at our option, at no charge to you with return freight paid by Marley. It is agreed that such repair or replacement is the exclusive remedy available from Marley Engineered Products.

THE ABOVE WARRANTIES ARE IN LIEU OF ALL OTHER WARRANTIES EXPRESSED OR IMPLIED, AND ALL IMPLIED WARRANTIES OF MERCHANTABILITY AND FITNESS FOR A PARTICULAR PURPOSE WHICH EXCEED THE AFORESAID EXPRESSED WARRANTIES ARE HEREBY DISCLAIMED AND EXCLUDED FROM THIS AGREEMENT. MARLEY ENGINEERED PRODUCTS SHALL NOT BE LIABLE FOR CONSEQUENTIAL DAMAGES ARISING WITH RESPECT TO THE PRODUCT, WHETHER BASED UPON NEGLIGENCE, TORT, STRICT LIABILITY, OR CONTRACT.

Some states do not allow the exclusion or limitation of incidental or consequential damages, so the above exclusion or limitation may not apply to you. This warranty gives you specific legal rights, and you may also have other rights which vary from state to state.

For the address of your nearest authorized service center, contact Marley Engineered Products in Bennettsville, SC, at 1-800-642-4328. Merchandise returned to the factory must be accompanied by a return authorization and service identification tag, both available from Marley Engineered Products. When requesting return authorization, include all catalog numbers shown on the products.

HOW TO OBTAIN WARRANTY SERVICE AND WARRANTY PARTS PLUS GENERAL INFORMATION

1. Warranty Service or Parts **1-800-642-4328**
2. Purchase Replacement Parts **1-800-654-3545**
3. General Product Information **www.marleymep.com**

Note: When obtaining service always have the following:

1. Model number of the product
2. Date of manufacture
3. Part number or description

Marley Engineered Products
470 Beauty Spot Rd. East
Bennettsville, SC 29512 USA

PPD 057A
12-03
Part No. 5200-2651-000