BERKO®
A Marley Engineered Products Brand
470 Beauty Spot Rd. E
Bennettsville, SC 29512

SUBMITTAL SHEET
VRP & VRS SERIES
COMMERCIAL/INDUSTRIAL INFRARED HEATER

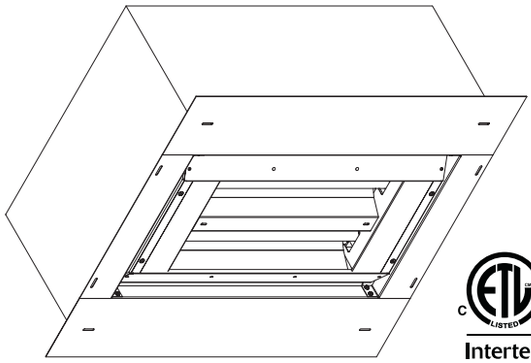

Enclosure Box not included

Intertek

CAPACITIES
208–600V | 1.7–10.9kW **Element Types**: Metal Sheath, Quartz Tube, Quartz Lamp **Reflection Angles**: 30° Sym., 60° Sym., 60° Asym., 90° Sym. **Mounting Types**: Wall, Ceiling, & Recessed

See Selection Chart for all Options

VRP & VRS SERIES – COMMERCIAL/INDUSTRIAL INFRARED HEATER

JOB NAME: _____

LOCATION: _____

ARCHITECT: _____

ENGINEER: _____

CONTRACTOR: _____

SUBMITTED BY: _____ DATE: _____

TAG/ITEM	QTY.	CATALOG NUMBER	HEATER			AMPS	REFLECTION ANGLE	FINISH	MOUNTING
			KW	VOLTS	Ø				

ACCESSORIES AND CONTROLS	TAG/ITEM	QTY.	CATALOG NUMBER	DESCRIPTION

SUBMITTED BY:	DATE

APPROVED BY:	DATE

Submittal_VRP-VRS-RadiantHeat-B_2024-06_v2.indd 1 6/17/24 2:40 PM

VRP & VRS SERIES

ARCHITECT'S AND ENGINEER'S SPECIFICATIONS*

Radiant Infrared heater(s) shall be supplied by Berko®, a Marley Engineered Products® Brand, Bennettsville, SC, USA and shall be of the kW rating, voltage and phase specified in the schedule. They shall be infrared type heating units, certified to cETLus, listed for wall, ceiling, and fully recessed ceiling mounting, and designed for indoor or semi-outdoor mounting.

HEAT EXCHANGER: Elements shall be metal sheath, quartz tube or quartz lamp, as specified in the heater schedule, radiant heating type that transmit infrared rays generated by the heavy duty coiled element inside. The quartz tube units shall have high thermal shock characteristics that make it exceptionally well suited for outdoor use with exposure to the elements. Elements shall be equipped with pigtail leads for more positive connections in severe conditions.

ENCLOSURE: All housing and hardware shall be constructed in one of two options: (RP Units)—20g galvaneal steel, polyester powder-coated with a high temperature powder coat finish or (RS Units) —20g type 304 stainless steel with a brush finished. Construction shall be a two-piece design that allows one person installation of the upper mounting support separately, to allow rough-in wiring. The heater section shall be constructed with tabs specifically designed for connection to the upper mounting support, by one person, for finish wiring. For recessed mounting needs, each enclosure will come with a complementing architectural trim, matching the finish of the heater or another specified finish, and creating a clean, unobstructed appearance.

REFLECTION: Reflectors shall be one-piece, snap-out, minimum .030 bright polished anodized aluminum with a beam angle of 30°, 60°, or 90° symmetrical, or 60° asymmetrical, as specified in the heater schedule and for optimal heat coverage.

MOUNTING: All units are listed for wall, ceiling, and fully recessed ceiling mounting applications. Each wiring compartment and housing are reinforced with hardware for those installations where the elements of wind and rain become a factor. For recessed mounting, units come standard with an architectural trim for a clean, unobstructed appearance, as well as a supplemental bracket for ease of installation. Adjustable tilt mounting brackets additionally available.

CONTROLS: A full line of controls and control packages are available. Please contact your local Marley Sales Representative for additional information.

OPTIONAL ACCESSORIES AND EQUIPMENT: The optional field installed offering includes bulb wire guards, tilt adjust mounting bracket, wall mounting bracket, recessed trim kits, and red Vycor sleeves for quartz lamp elements.

**Berko reserves the right to change specifications without prior notice.*

Maximum Wattage:

	2-ELEMENT ENCLOSURE			3-ELEMENT ENCLOSURE		
	METAL SHEATH	QUARTZ TUBE	QUARTZ LAMP	METAL SHEATH	QUARTZ TUBE	QUARTZ LAMP
24″	1,700	2,000	3,200	2,500	3,000	4,800
33″	3,000	3,000	5,000	4,500	4,500	7,500
46″	4,000	4,000	7,300	6,000	6,000	10,950

*Element Wattage**

Metal Sheath	850	1500	2000
Quartz Tube	1000	1500	2000
Quartz Lamp	1600	2500	3650

*Specs vary by size. Refer to the submittal sheet for full details.

*Element Voltages**

208	240
277	347
480	600

*Enclosure: Dimensions**

	Height	Width	Length		
2 Bulb	7 ⅛″	15″	24″	33″	46″
3 Bulb		12 ½″			

*Reflection Angle**

30° Sym.	
60° Sym.	60° Asym.
90° Sym.	

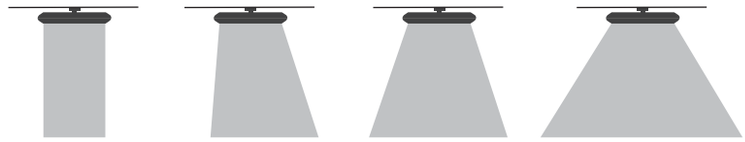

30° Symmetrical | 60° Asymmetrical | 60° Symmetrical | 90° Symmetrical

NOTE: All models are NON-STOCK, MADE-TO-ORDER. When ordering, specify quantity, catalog number, voltage, wattage, optional controls, and finish. Consult sales representative for lead times.

*Specs vary by size. Refer to the submittal sheet for full details.

Approvals: _____ _____ _____

Optional Accessories:

CATALOG NO.	UPC	DESCRIPTION	COMPATIBLE WITH	CARTONS	SHIP WT.
FWG22	685360084060	Wire Guard for 2-Element Heaters	VRS2/VRP2 (24 in. L)	1	1 lbs
FWG23	685360084077	Wire Guard for 2-Element Heaters	VRS2/VRP2 (33 in. L)	1	1.5 lbs
FWG24	685360084084	Wire Guard for 2-Element Heaters	VRS2/VRP2 (46 in. L)	1	2 lbs
FWG32	685360084091	Wire Guard for 3-Element Heaters	VRS3/VRP3 (24 in. L)	1	1.5 lbs
FWG33	685360084107	Wire Guard for 3-Element Heaters	VRS3/VRP3 (33 in. L)	1	2 lbs
FWG34	685360084114	Wire Guard for 3-Element Heaters	VRS3/VRP3 (46 in. L)	1	2.5 lbs
FRPATMB	685360084022	Adjustable Tilt Mounting Bracket — VRP Series		1 Set	1 lbs
FRSATMB	685360084046	Adjustable Tilt Mounting Bracket — VRS Series		1 Set	1 lbs
FRPWMB	685360084039	Wall Mounting Bracket — VRP Series		1 Set	6 lbs
FRSWMB	685360084053	Wall Mounting Bracket — VRS Series		1 Set	6 lbs
RVS2	685360137650	24 in. Red Vycor sleeve	VR(*)22/VR(*)32	1	—
RVS3	685360137667	33 in. Red Vycor sleeve	VR(*)23/VR(*)33	1	—
RVS4	685360137674	46 in. Red Vycor sleeve	VR(*)24/VR(*)34	1	—
IRK-RT(**)2(***)		Recessed Trim Kit	VRS2/VRP2		
IRK-RT(**)3(***)		Recessed Trim Kit	VRS3/VRP3		
IRR-INST-BRK-KT		Installation Trim Ring Bracket	Compatible with all trim kits		

(1) One element per carton order. IRR-INST-BRK-KT included for Recessed Mounted Units. * Denotes remaining catalog number (See Enclosure Chart).

Replace with color code: **S = Stainless, **W** = White, **B** = Bronze, **U** = Custom. ***Replace with number of bulbs: **2** = 2-bulb, **3** = 3-bulb; then length code: **2** = 24", **3** = 33", **4** = 46"

Metal Sheath: used indoors or outdoors in high-traffic areas; Quartz Tube and Quartz Lamp: used indoors and outdoors for snow melting and spot heating. Bronze finish is not intended for direct salt spray exposure in marine applications or highly corrosive greenhouse, swimming pool, chemical storage or industrial atmospheres. Maintain at least 5 ft. in radiant path, between bottom of heater and combustible material. Pigtail element leads for a more positive connection in high-traffic areas where physical abuse.

Dimensions and Clearances:

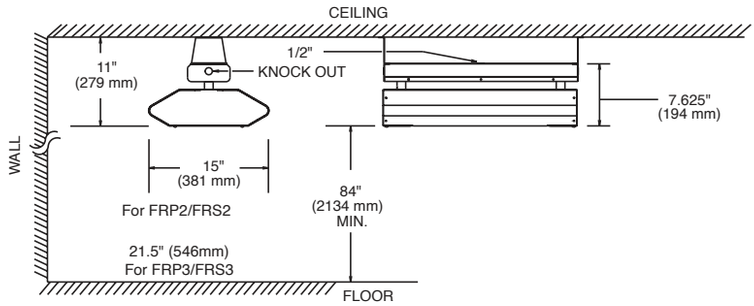

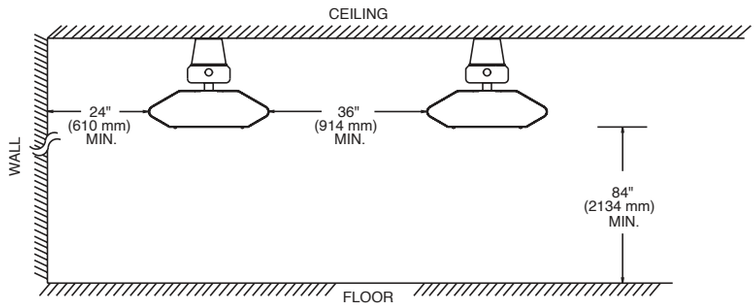

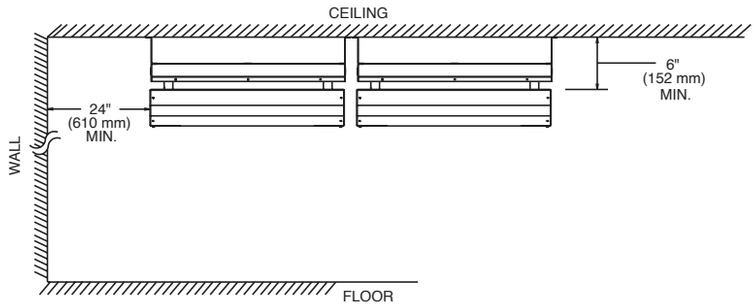

MOUNTING CLEARANCES

- 24 in. to vertical side walls
- 36 in. between heaters mounted side by side. Heaters may be mounted end to end.
- 6 in. to ceiling
- 84 in. to floor

Approvals: _____ _____ _____

Dimensions: 2-Element

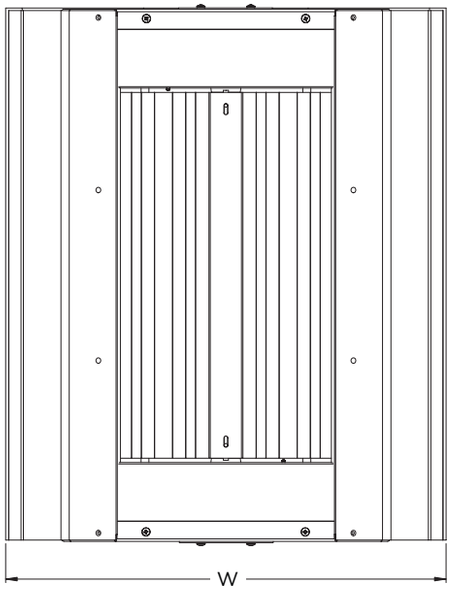

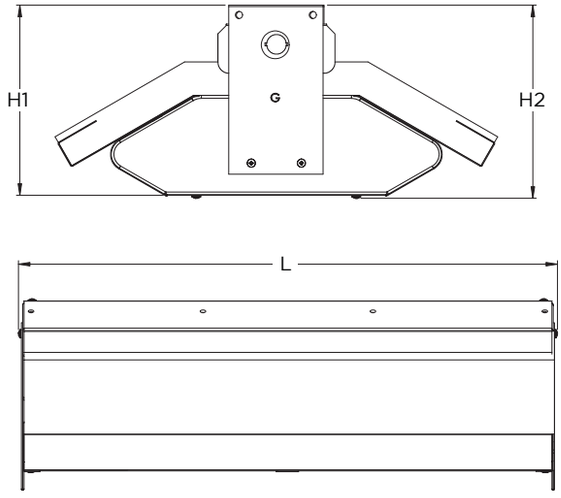

	2-ELEMENT LENGTH		
	24″	33″	46″
L	24 3/8	33 3/8	46 3/8
W	19 7/8	19 7/8	19 7/8
H1	8 21/32	8 21/32	8 21/32
H2	8 17/32	8 17/32	8 17/32

Dimensions: 3-Element

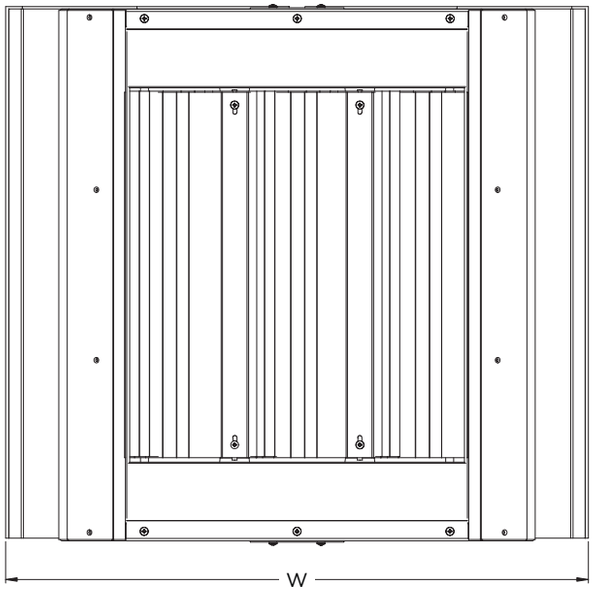

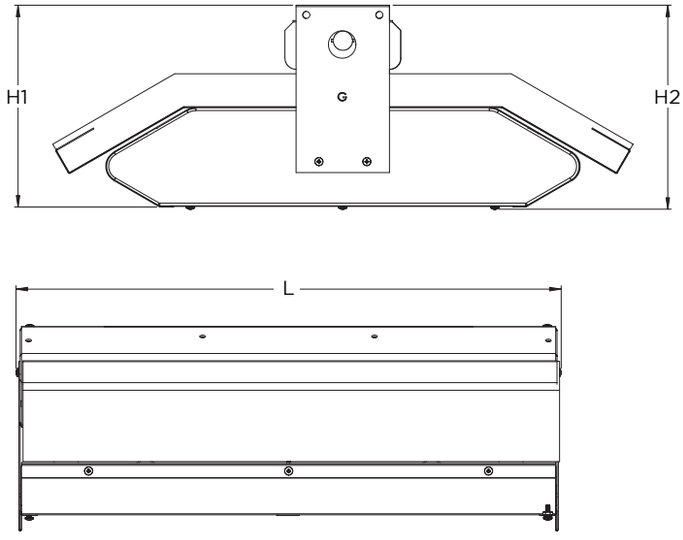

	3-ELEMENT LENGTH		
	24″	33″	46″
L	24 3/8	33 3/8	46 3/8
W	26 5/16	26 5/16	26 5/16
H1	9 1/4	9 1/4	9 1/4
H2	9 5/32	9 5/32	9 5/32

Approvals: _____ _____ _____

Dimensions: Recessed Trim Kit

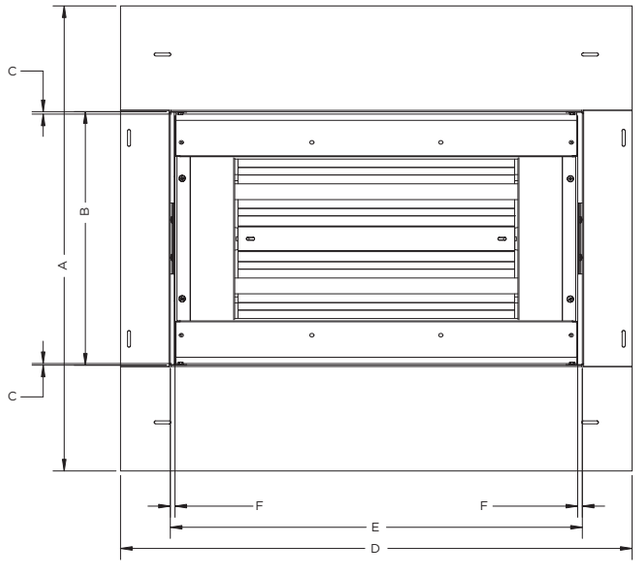

Number of Bulbs	A	B	C	D	E	F
2	27 ¾″	24 9⁄16″	⅛″	30 ½″	24 9⁄16″	¼″
2	27 ¾″	24 9⁄16″	⅛″	39 ½″	33 9⁄16″	¼″
2	27 ¾″	24 9⁄16″	⅛″	52 9⁄16″	46 ⅝″	5⁄16″
3	34 ¾″	22 1⁄16″	¼″	30 ½″	24 9⁄16″	¼″
3	34 ¾″	22 1⁄16″	¼″	39 ½″	33 9⁄16″	¼″
3	34 ¾″	22 1⁄16″	¼″	52 9⁄16″	46 ⅝″	5⁄16″

Enclosure Box must be constructed per Installation Manual and by Licensed Contractor

Approvals: _____ _____ _____

How to Order

Example:

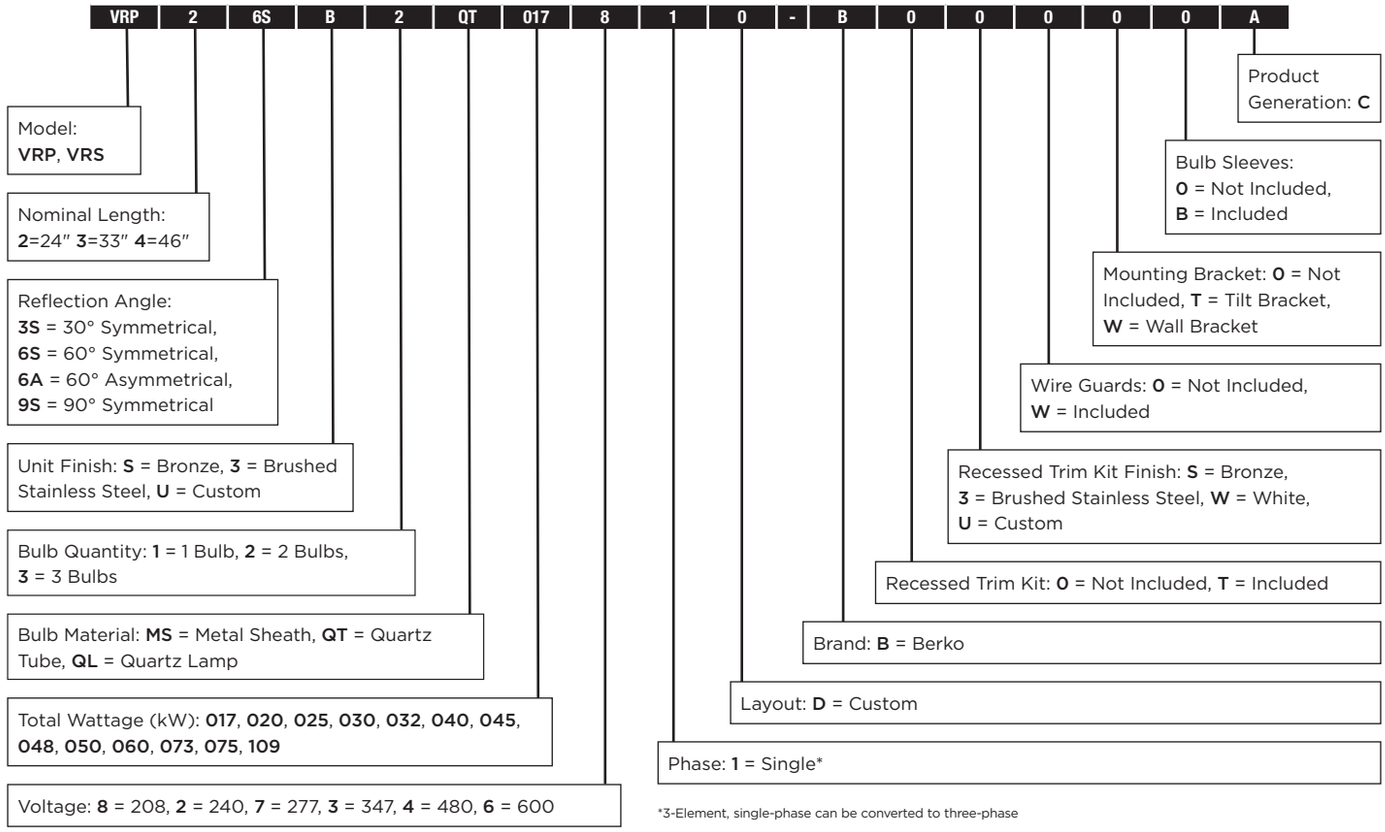

*3-Element, single-phase can be converted to three-phase

Total wattage: in kW - 017 = 1.7kW, 109 = 10.9kW

Based on inputs, the selection process should be refined as the configurations are selected (i.e different offering for total wattage and voltage based on unit size and bulb material selection)

Contact Marley Sales Representative for additional configuration details. For control packages and offering, contact your local Marley sales representative

No matter the industry or application, Marley Engineered Products has a robust portfolio of innovative, reliable, high-performance comfort heating and ventilation solutions for all your heating needs.

For more information or assistance on your next project, contact Technical Services at 800-642-4328

Scan the QR code to access additional specs and features

Approvals: _____ _____ _____