Marley
Engineered Products

MECHANICAL ACCESSORIES FOR RP / RS SERIES INFRARED HEATERS

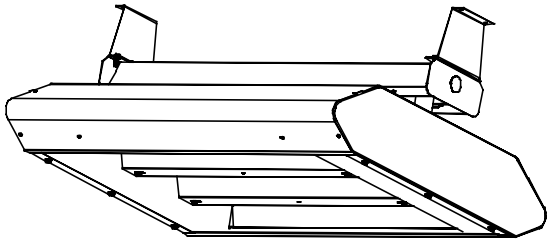

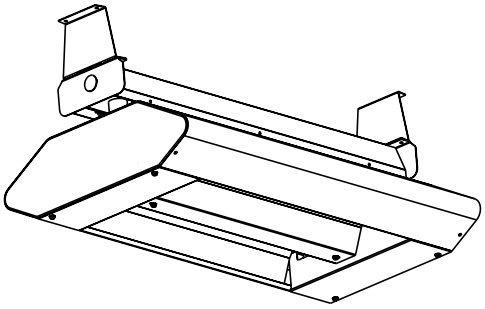

Installation & Maintenance Instructions

Dear Owner,

Congratulations! Thank you for purchasing this new heater manufactured by a division of Marley Engineered Products. You have made a wise investment selecting the highest quality product in the heating industry. Please carefully read the installation and maintenance instructions shown in this manual. You should enjoy years of efficient heating comfort with this product from Marley Engineered Products... the industry's leader in design, manufacturing, quality and service.

... The Employees of Marley Engineereed Products

WARNING

Read Carefully - These instructions are intended to supplement and be used in conjunction with the instructions provided with the heater. Failure to adhere to the instructions could result in in death, serious personal injury, fire, or permanent damage to heater.

To prevent a possible electric shock, always disconnect power to heater at main service panel, breaker, or fuse box before attempting to install or service the heater, or install these accessories.

SAVE THESE INSTRUCTIONS

WIRE GUARD

Reference Figure 1.

1. Drill $^{5}/_{32}$" diameter holes at the dimple locations shown.
2. Install heating elements in accordance with the instructions provided with the elements.
3. Position wire guard onto heater as shown and attach to heater (into the $^{5}/_{32}$" holes drilled in step 1) using the #10 scews provided.

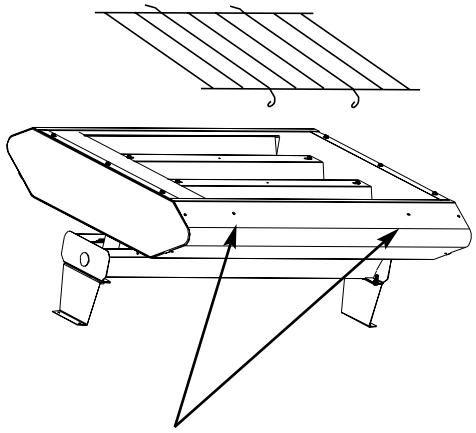

Figure 1

4. Secure wire guard to heater using #10 screws provided.

RED VYCOR SLEEVE

Note: To be used on Quartz Lamp elements only.
Do **NOT** handle Quartz lamp elements with bare hands, as salt in perspiration may deteriorate the quartz and result in a premature failure.

1. Attach one end of quartz lamp element as indicated by instructions supplied with elements.
2. Carefully slide Red Vycor Sleeve over element.
3. Position element in reflector and continue with element installation, as indicated by instructions supplied with elements.

ADJUSTABLE TILT MOUNTING BRACKET

Adjustable Tilt Mounting Brackets replace the mounting brackets supplied with the heater enclosure.

Reference Figure 2.

1. Determine mounting location as indicated by instructions supplied with heater enclosure.
2. Do **NOT** attach originally supplied mounting brackets.
3. On a workbench or other flat surface, attach Adjustable Tilt Mounting Brackets to ends of wireway cover using bolts, star washers and nuts supplied with heater enclosure.
4. Remove wireway cover/mounting brackets from wireway base, as indicated by instructions supplied with heater enclosure.
5. Mount wireway cover/mounting brackets to ceiling and secure using fasteners sized to sufficiently support heater and any optional accessories used.
6. Proceed with heater installation as indicated by instructions supplied with heater enclosure.

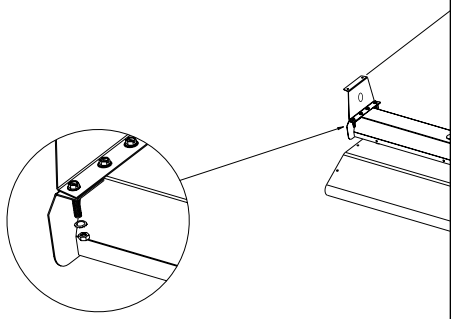

Figure 4A
(Typical 4 Locations)

Figure 2

GOLD ANODIZED REFLECTORS

Reference Figure 3.

1. Place the heater enclosure on a workbench or other flat surface.
2. If elements are installed, remove them at this point. Reflector can not be replaced with elements installed.
3. Remove the reflector attachment screws and keep for reuse.
4. Applying light pressure, push down on the bottom of one side reflector until reflector end is free from enclosure.
5. Rotate reflector away from enclosure.
6. Install replacement reflector in opposite sequence.

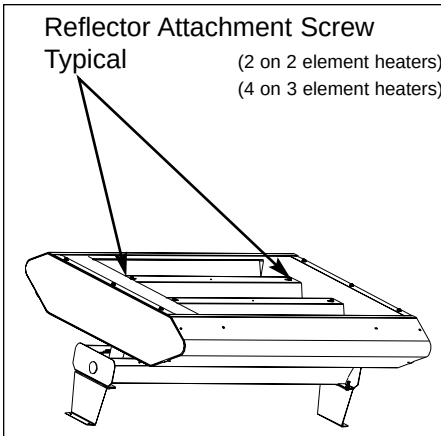

Figure 3

WALL MOUNTING BRACKET

Reference Figure 4.

1. Determine mounting location per instructions supplied with heater enclosure.
2. Attach heater mounting brackets (supplied with heater) to wireway cover per instructions included with heater enclosure.
3. Secure wall angle brackets to wall using fasteners (by others) sized to sufficiently support heater and any optional accessories used.
4. Attach bracket extension arm to wall angle bracket using screws, nuts, and washers provided.
5. Attach heater mounting brackets to Wall Mounting Bracket extension arm using screws, nuts, and washers provided.

MODEL	"A" in. (mm)
RP32 / RS32	24.625 (625)
RP33 / RS33	33.625 (854)
RP34 / RS34	46.625 (1184)

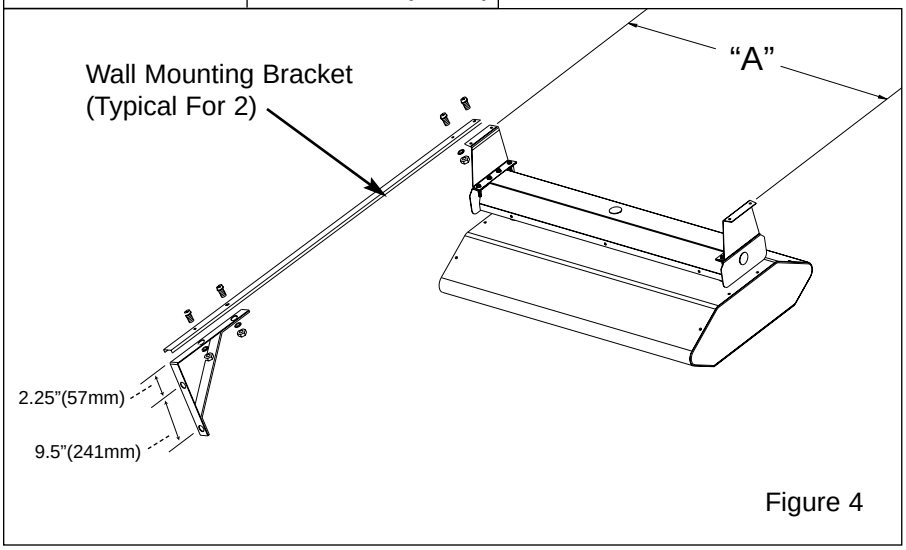

Figure 4

LIMITED WARRANTY

All products manufactured by Marley Engineered Products are warranted against defects in workmanship and materials for one year from date of installation, except heating elements which are warranted against defects in workmanship and materials for five years from date of installation. This warranty does not apply to damage from accident, misuse, or alteration; nor where the connected voltage is more than 5% above the nameplate voltage; nor to equipment improperly installed or wired or maintained in violation of the product's installation instructions. All claims for warranty work must be accompanied by proof of the date of installation.

The customer shall be responsible for all costs incurred in the removal or reinstallation of products, including labor costs, and shipping costs incurred to return products to Marley Engineered Products Service Center. Within the limitations of this warranty, inoperative units should be returned to the nearest Marley authorized service center or the Marley Engineered Products Service Center, and we will repair or replace, at our option, at no charge to you with return freight paid by Marley. It is agreed that such repair or replacement is the exclusive remedy available from Marley Engineered Products.

THE ABOVE WARRANTIES ARE IN LIEU OF ALL OTHER WARRANTIES EXPRESSED OR IMPLIED, AND ALL IMPLIED WARRANTIES OF MERCHANTABILITY AND FITNESS FOR A PARTICULAR PURPOSE WHICH EXCEED THE AFORESAID EXPRESSED WARRANTIES ARE HEREBY DISCLAIMED AND EXCLUDED FROM THIS AGREEMENT. MARLEY ENGINEERED PRODUCTS SHALL NOT BE LIABLE FOR CONSEQUENTIAL DAMAGES ARISING WITH RESPECT TO THE PRODUCT, WHETHER BASED UPON NEGLIGENCE, TORT, STRICT LIABILITY, OR CONTRACT.

Some states do not allow the exclusion or limitation of incidental or consequential damages, so the above exclusion or limitation may not apply to you. This warranty gives you specific legal rights, and you may also have other rights which vary from state to state.

For the address of your nearest authorized service center, contact Marley Engineered Products in Bennettsville, SC, at 1-800-642-4328. Merchandise returned to the factory must be accompanied by a return authorization and service identification tag, both available from Marley Engineered Products. When requesting return authorization, include all catalog numbers shown on the products.

HOW TO ORDER REPAIR PARTS

In order to obtain any needed repair or replacement parts, warranty service or technical information, please contact Marley Engineered Products Service Center toll-free by calling 1-800-642-HEAT.

Marley Engineered Products

470 Beauty Spot Rd. East
Bennettsville, SC 29512 USA