Specification Bulletin

# Super Q Ventilators

## Models CV6, CV8, CV10, CV101, CV12

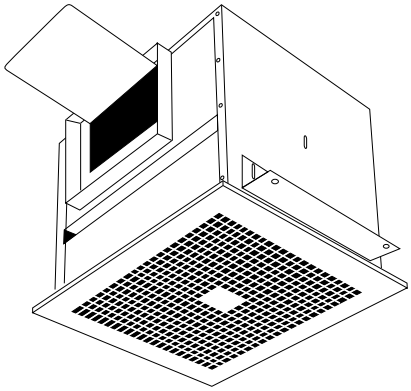

## MODEL DESCRIPTION

Marley Engineered Products six models of specification-grade commercial ventilators cover ventilation requirements from the smallest baths to the largest conference rooms.

## FEATURES

- Large centrifugal blowers rotate slowly to generate airflow with exceptional quietness.
- Resilient rubber mounted motors eliminate vibration.
- Chatter proof integral back draft damper.
- Heavy gauge steel housing lined with sound absorbing 1/2" acoustical insulation.
- Permanently lubricated motor for maintenance free continuous operation.
- Deluxe grille with self-adjusting springs.
- All models can be mounted for direct discharge or converted to in-line discharge. Conversion panel included with each unit.
- Blower wheels and motors are factory balanced prior to shipment.
- Adjustable mounting brackets included.

## SUGGESTED SPECIFICATIONS

Ventilation fan shall be Marley Engineered Products Super Q Series. Housing shall be heavy gauge painted steel lined with 1/2" acoustical insulation and have adjustable mounting brackets. Housing should have steel pre-assembled duct fitting with built-in back draft damper. Housing shall be convertible from direct discharge to in-line discharge and shall include a conversion panel. Blower shall be removable and have centrifugal blower wheel. Motor shall be plug-in, resiliently rubber mounted and permanently lubricated. Fan grille shall be white high-impact styrene and have self-adjusting springs. Fans shall be UL approved and AMCA certified.

## SUPER Q™ FAN PERFORMANCE

| CATALOG NUMBER | MOTOR[1] RPM | MOTOR VOLTAGE 60 Hz A.C. | MAX. WATTS INPUT | WEIGHT (Lbs.) | STATIC PRESSURE | FAN CAPACITY - CUBIC FEET PER MINUTE[3] 0" | .125" | .250" | .375" | .500" | .625" | .750" |
|---|---|---|---|---|---|---|---|---|---|---|---|---|
| | | | | | CFM[4] | 123 | 101 | 82 | - | - | - | - |
| CV6 Low Speed | 1050 | 115/1 | 47 | 14 | SONES[2] | 0.9 | 1.4 | 1.8 | - | - | - | - |
| | | | | | CFM[4] | 230 | 196 | 166 | 122 | - | - | - |
| CV6 High Speed | 1550 | 115/1 | 108 | 14 | SONES[2] | 3.3 | 3.0 | 3.0 | 3.1 | - | - | - |
| | | | | | CFM[4] | 272 | 247 | 231 | 217 | 199 | - | - |
| CV8 Low Speed | 1050 | 115/1 | 77 | 20 | SONES[2] | 2.1 | 2.4 | 2.9 | 3.3 | 3.6 | - | - |
| | | | | | CFM[4] | 426 | 401 | 377 | 357 | 341 | 328 | 304 |
| CV8 High Speed | 1550 | 115/1 | 130 | 20 | SONES[2] | 4.5 | 4.7 | 4.7 | 5.1 | 5.6 | 5.8 | 5.8 |
| | | | | | CFM[4] | 310 | 273 | 239 | 213 | 182 | 136 | 73 |
| CV81 | 1050 | 115/1 | 77 | 20 | SONES[2] | 2.5 | 2.7 | 2.9 | 3.3 | 3.7 | 4.2 | 4.3 |
| | | | | | CFM[4] | 469 | 441 | 423 | 403 | 387 | 367 | 347 |
| CV10 Low Speed | 1050 | 115/1 | 243 | 30 | SONES[2] | 4.5 | 4.8 | 5.1 | 5.4 | 5.6 | 5.8 | 6.0 |
| | | | | | CFM[4] | 728 | 694 | 664 | 638 | 613 | 591 | 565 |
| CV10 High Speed | 1550 | 115/1 | 390 | 30 | SONES[2] | 8.6 | 8.6 | 8.6 | 8.7 | 8.6 | 8.8 | 8.8 |
| | | | | | CFM[4] | 611 | 537 | 467 | 405 | 222 | 116 | |
| CV101 | 1050 | 115/1 | 243 | 38 | SONES[2] | 3.9 | 3.6 | 3.9 | 4.6 | 5.5 | 6.0 | |
| | | | | | CFM[4] | 901 | 855 | 812 | 755 | 683 | 552 | |
| CV12 | 1050 | 115/1 | 260 | 44 | SONES[2] | 5.8 | 5.9 | 6.3 | 6.5 | 6.5 | 6.0 | |

*(1) RPM shown is nominal and the performance is based on actual speed of test*
*(2) Sones ratings in accordance with AMCA Standard 301-90*
*(3) The AMCA Certified Ratings Seal applies to air capacities only*
*(4) Performances shown include values with inlet grill, backdraft damper and outlet duct in place*

| REFERENCE | QTY. | REMARKS | Project |
|---|---|---|---|
| | | | Location |
| | | | Architect |
| | | | Engineer |
| | | | Contractor |
| | | | Submitted By |
| | | | Date |

# FAN DIMENSIONS

| MODEL | HOUSING | | | | | | | OUTLET | | | GRILL | | TDA PANEL | | |
|---|---|---|---|---|---|---|---|---|---|---|---|---|---|---|---|
| | A | B | C | D | E | E1 | F | G | H | J | K | L | X | Y | Z |
| CV6 | 12.25 | 9.125 | 16 | 9.125 | 1.25 | 1.25 | 5.375 | 10 | 3.25 | 0.75 | 11 | 13.75 | 10 | 6 | 1.625 |
| CV8 | 13.875 | 11.375 | 17.375 | 11.375 | 1.87 | 4 | 5.25 | 8 | 6 | 0.75 | 13.25 | 14.875 | 10 | 8 | 1.563 |
| CV81 | 13.875 | 11.375 | 17.375 | 11.375 | 1.875 | 4 | 5.25 | 8 | 6 | 0.75 | 13.25 | 14.875 | 10 | 8 | 1.563 |
| CV10 | 18 | 14.125 | 21.5 | 14.125 | 3.625 | 6.375 | 8 | 8 | 6 | 0.75 | 15.5 | 19.375 | 14 | 10 | 2 |
| CV101 | 24 | 14.125 | 27.5 | 14.125 | 1 | 1 | 8 | 22 | 6 | 0.75 | 15.5 | 25 | 20 | 10 | 2 |
| CV12 | 24 | 14.125 | 27.5 | 14.125 | 1 | 1 | 8 | 22 | 6 | 0.75 | 15.5 | 25 | 20 | 10 | 2 |

*Units are shipped with motor connected for "S" (low speed) operation.*

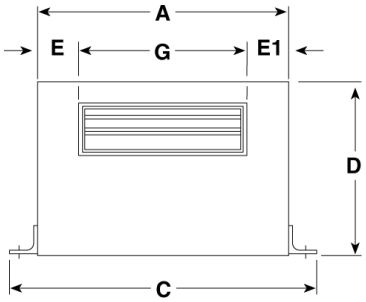


**CV6, CV8, CV81, CV10, CV101**

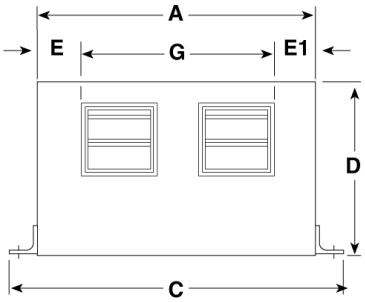


**CV12 Flange Position**

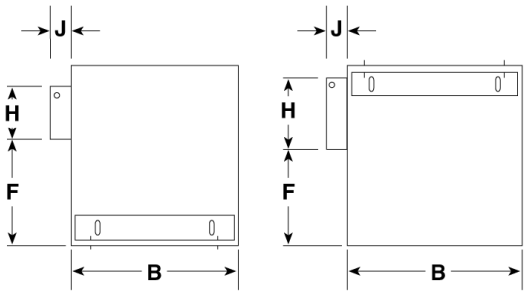


**Alternate Mounting**

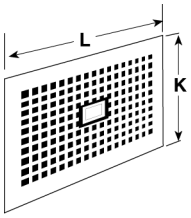


**Grill**

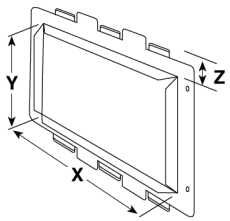


**TDA Panel**


Marley Engineered Products

470 Beauty Spot Road East,
Bennettsville, SC 29512
For more info visit www.marleymep.com