Please read and save these instructions. Read carefully before attempting to assemble, install, operate or maintain the product described. Protect yourself and others by observing all safety information. Failure to comply with instructions could result in personal injury and/or property damage! Retain instructions for future references. Trained and experienced personnel should perform the installation according to manufacturer's instructions and in compliance with federal, state and local government requirements. Do not install in kitchen or shower stall area.

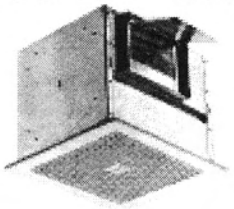

Marley Ceiling And Inline Fans

Marley Ceiling Fans are incredibly quite! They are designed for applications where a low noise, high reliability ceiling or cabinet fan is required. With air capacities from 30 to 1600 CFM, they're ideally suited for use in ventilating bathrooms or other low to medium CFM applications. Housings are fabricated of sturdy galvanized steel to insure durability. Acoustic insulation, in combination with matched motor and wheel assemblies, lowers sound levels and improves air performance. Further, motors are mounted on vibration isolators to minimize noise levels. Together, these features insure years of problem free, quiet operation.

Receiving, Handling and Storage

Marley fans are carefully inspected before leaving the factory. When the unit is received, inspect the carton for any signs of damage or tampering. Units are factory-balanced, all components have been tested prior to shipment. Units which are mishandled can void the warranty provisions. If units have been damaged in transit, it is the responsibility of the receiver to make all claims against the carrier. Marley is not responsible for damages incurred during shipment.

Avoid severe jarring and/or dropping. Handle units with care to prevent damage to components. Long-term storage requires special attention. Units should be stored on a level, solid surface, preferably indoors. If outside storage is necessary, protect the units against moisture and dirt by encasing the cartons in plastic or some similar weatherproof material. Provide proper security against theft.

Unpacking

Place the carton in an upright position and remove staples or use a sharp (knife edge) instrument to CAREFULLY cut or scribe the sealing tape on both sides at the top of the carton. Open carton flaps. Remove any cardboard filler pieces, as well as loose components (mounting flanges, hardware bag) and ceiling face grille.

Carefully remove the unit from the carton. Remove styrofoam or cardboard fillers that may be inside the housing. Lift and remove tape retaining backdraft damper. Inspect the unit for any damage that may have occurred during transit and check for loose, missing or damaged parts (See back page).

Installation

UNITS CV6, CV8, CV81, CV10, CV101 AND CV12

Remove internal protective shipping trays and filers. Check for and remove any loose hardware or particles from the inside of the fan housing. Disconnect motor cord and plug from internal terminal box and receptacle. On installations made before a final ceiling is installed, with access from below, the following procedure applies. Assemble adjustable flanges to fan housing with four self-tapping metal screws provided. The adjustable flanges should be located as illustrated in Drawing No. 1.

NOTE: STANDARD SUPER Q'S ARE SET UP FOR RA (RIGHT ANGLE DISCHARGE). FOR TD (TOP DISCHARGE) OR TDA (INLINE) SEE CONVERSION INSTRUCTIONS.

NOTE: ON MODEL CV6, WHEN USING A VARIABLE SPEED CONTROLLER, WIRE TO HIGH (H) SETTING ONLY.

Using appropriate hardware (wood screws or sheet metal screws, depending on joist construction), secure the adjustable flanges to each joist. Attach a properly sized duct to duct sleeve mounted on the fan housing. Run this duct system to an appropriate wall or roof cap. **DISCHARGE SIDE MUST BE GUARDED, UNLESS IT IS CONNECTED TO DUCT.**

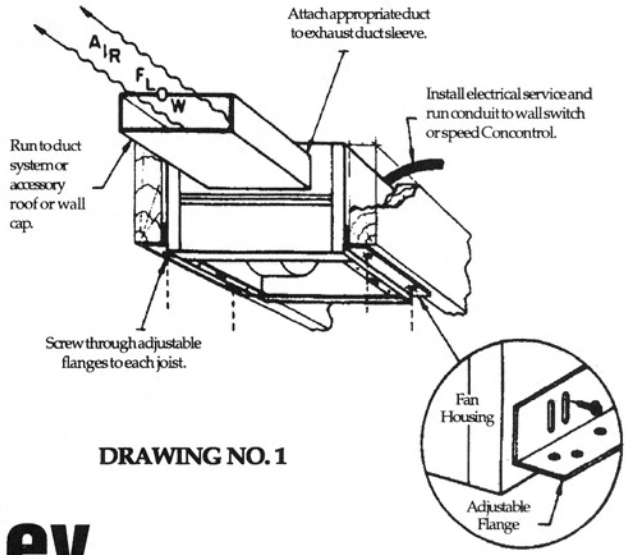

DRAWING NO. 1

Marley Engineered Products
470 Beauty Spot Road East
Bennettsville, SC 29512 USA

Normally, power is brought up from within the building through conduit lines and located at the terminal box. Before wiring is attempted, always lock out primary and secondary power source. Utilizing the pre-punched hole found at the terminal box on the fan housing, insert a 3/8" electrical connector. All wiring furnished should be in strict accordance with the National Electrical Code and local, state and federal standards. Complete the installation by cutting a 9 1/2 " by 12 1/2" ceiling opening for the CV6; 11 7/8 by 13 3/4" for the CV8 and CV81; 14 1/2" by 18" for the CV10' and 14 1/2" by 23 3/4" for CV101 and CV12 ceiling fan.

Installation of ceiling fans in suspended ceiling systems require a minimum 10 gauge solid wire for hanging or suspending the ceiling fan. Four wires per unit should be connected to the pre-punched holes of the adjustable mounting flanges (after the flanges have been mounted to the fan housing as outlined above). Note: For the CV12, 1/4" threaded rods or perforated steel strips should be used per fan as illustrated in Drawing No. 4.

If installation is to be made with ceiling in place, access must be form above. The following procedure should be used for installing the Super Q Ceiling Fans. Assemble the adjustable flanges to the fan housing as illustrated in drawings No. 2 or 2A. Position adjustable flanges so the unit is flush with top side of ceiling surface. Tighten the adjustable flanges and secure them with the appropriate hardware (wood screws or sheet metal screws, depending on framing construction). Use the housing as a template, punch or drill a small hoe through the ceiling at each corner of the housing an cut an opening in the ceiling, using these holes as a guide. Install the cut and electrical service in accordance with the instructions listed in the previous section.

In installations where the ceiling si already installed and there is no access from above, the following procedure should be followed. Before cutting ceiling opening, determine the exact location of framing or support members. Cut hole in ceiling using care not to exceed the dimensions of the ceiling grille. Note: The ceiling holes should be cut so that one edge of the hole is in line with the inside face of the joist. The hole must be large enough to permit passage of the fan housing into the ceiling space. Care should be taken not to exceed the ceiling grille dimension when cutting.

Remove the blower assembly from the housing. For single blower units, remove two #10 sheet metal screws near the blower, slide power pack to the left to release it from the housing. (For double blower units, remove one 1/4" bolt).

Electrical service should now be brought up to the fan location. This should be done in accordance with the instructions listed in the previous section.

To secure housing in ceiling space, raise the housing into place with one edge of the housing against joist "A" (see Drawing No. 3). Determine if it is necessary to build out form joist "B" so that the housing can be secured from both sides. If building out is necessary, an appropriate piece(s) of wood should be utilized. These wood spacers should be nailed to joist "B" to increase the thickness of the joist at the point where the fan will be installed. The fan housing should fit snugly between joist "A" and joist "B" (or the built-out-section of joist "B"). If spacers are required for joist "B" they should be sized according to the dimension of the fan housing. Using care to avoid damage to the housing, secure the housing to the joists by nailing through the pre-punch holes found at the top and bottom of housing sides. These pre-punched holes would normally be utilized as a point of attachment for the adjustable flanges; however, these flanges will not be necessary with this type of installation.

DRAWING NO. 2

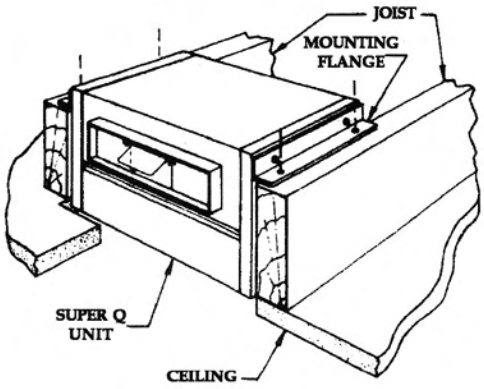

DRAWING NO. 2A

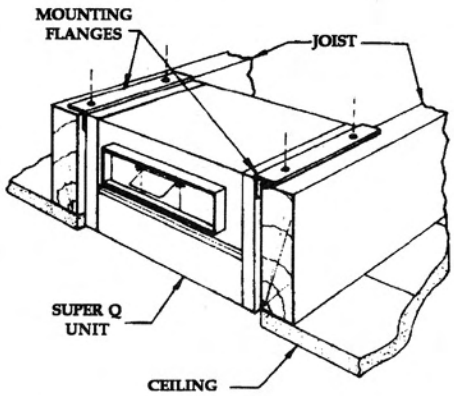

FANS MUST BE DIRECTLY SUPPORTED BY BUILDING STRUCTURE

DRAWING NO. 3

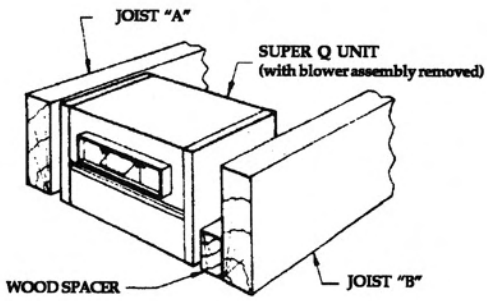

DRAWING NO. 4

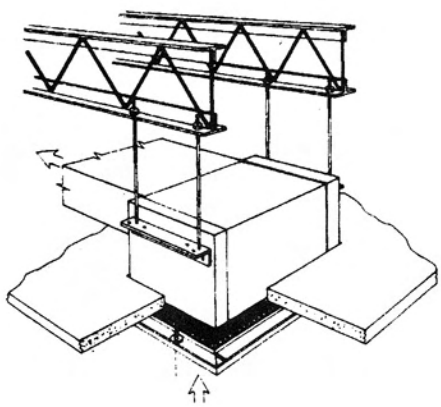

Before the nails are driven snug, care should be taken to assure that the housing is 1/4" above the ceiling level. Nails should now be secured. Care should be taken to assure that the nail head is large enough to prevent slipping through the pre-punched holes. A washer can be used to increase the bearing surface. Reattach blower assembly to housing. Lock out primary and secondary power source and secure electrical lines to the terminal box. This should be done in accordance with the procedure outlined in previous paragraphs.

For all of the installation situations described above the egg crate ceiling grille should be installed as a final step. This is done by first assembling the two torsion springs to the grille. Use the torsion springs and grille buttons from the hardware kit provided. Insert the grille buttons into the ceiling grille as shown in Drawing No. 5A through the slot in the grille buttons. The grille is now ready for assembly to the housing. Lift the grille into position below the housing. Insert the two torsion springs into the keyhole slots located in the center of the housing as shown in Drawing No. 5B. Push the grille towards the housing.

DRAWING NO. 5A

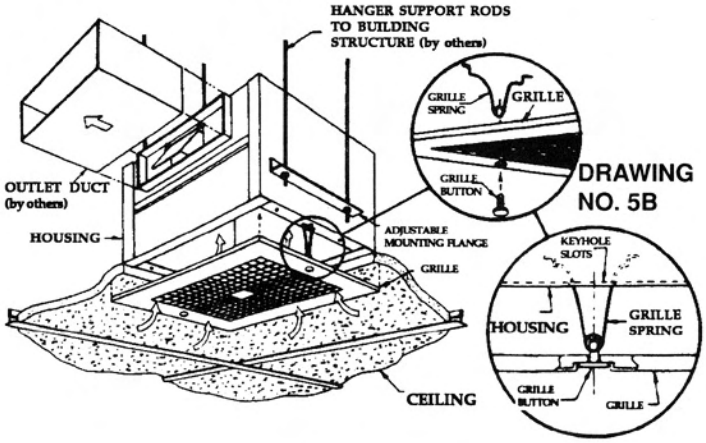

DRAWING NO. 5B

Maintenance

CAUTION: TO REDUCE THE RISK OF INJURY, DISCONNECT FROM POWER SUPPLY BEFORE SERVICING.

The blower wheel, housing and grille should be cleaned of dust and grease if required. **POWER SHOULD BE DISCONNECTED BEFORE CLEANING THE INTERNAL PARTS OF THE CEILING FAN.**

- Remove grille. Using a vacuum cleaner with appropriate attachments, vacuum dust from grille. Wash grille with a warm, soapy solution of water. Allow grille to dry thoroughly before reinstalling.
- To clean blower wheel(s) and housing, unplug blower from integral terminal box. Remove the blower assembly from the housing. For single blower units, remove two #10 sheet metal screws near the blower discharge and slide to the left. For double blower units, remove one 1/4" bolt next to motor. Vacuum blower wheel, if necessary, the wheel can be washed. **USE EXTREME CAUTION - DO NOT ALLOW WATER TO ENTER MOTOR**. Wipe blower wheel dry with an absorbent cloth. Before replacing blower/motor assembly, wipe out interior of housing. Replace blower/motor assembly and secure with self-tapping screws. Plug in blower motor to terminal box.

Electrical Connections

CAUTION: Before attempting any repair or installation work, be certain that all power to the Motor and electrical accessories are turned off and locked in off position.

1. Connect Motor per nameplate to correct power supply.
2. Install all wiring, protection and grounding in accordance with National Electrical Code and Local Requirements.
3. Follow all Local Electrical and Safety Codes, as well as the National Electrical Code (NEC) and the Occupational Safety and Health Act (OSHA).
4. In order to prevent motor failure when speed controller is used unit must be started on High Speed before turning to Low Speed.

INTERNAL

A. Single Speed Motors

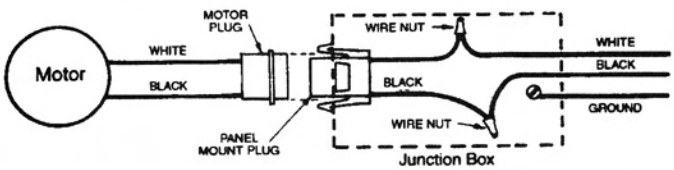

B. Two Speed Motors

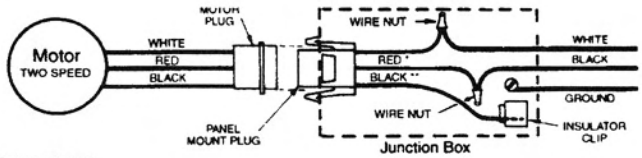

CAUTION:

* For low speed insulate black lead as shown above.

** For high speed insulate red lead and connect black to black with wire nut.

NOTE: ON MODEL CV6, WHEN USING A VARIABLE SPEED CONTROL, WIRE TO HIGH (H) SETTING ONLY.

Make necessary connections by using two wire nuts. A Separate ground wire must be connected to the grounding screw. Reinstall the cover of the junction box.

EXTERNAL

(115 VOLTS)

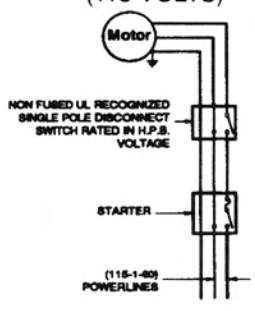

(230 VOLTS)

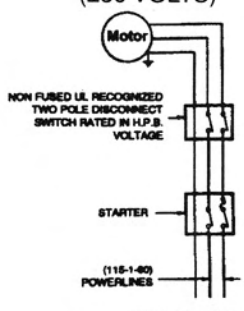

PRINTED IN USA
59749-1

Dimensional Data

Model	Housing							Outlet Duct			Grille		TDA Intake Duct		
	A	B	C	D	E	E¹	F	G	H	J	K	L	X	Y	Z
CV6	12 1/2	9 1/8	16	9 1/8	1 1/4	1 1/4	5 5/8	10	3 1/4	3/4	11	13 3/4	10	6	1 5/8
CV8, CV81	13 7/8	11 3/8	17 3/8	11 3/8	1 7/8	4	5 1/4	8	6	3/4	13 1/4	14 7/8	10	8	1 9/16
CV10	18	14 1/8	21 1/2	14 1/8	3 5/8	6 3/8	8	8	6	3/4	15 1/2	19 3/8	14	10	2
CV101, CV12	24	14 1/8	27 1/2	14 1/8	1	1	8	22	6	3/4	15 1/2	25	20	10	2

ALL DIMENSIONS IN INCHES

CV6

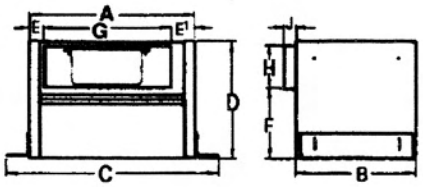

CV8, CV81

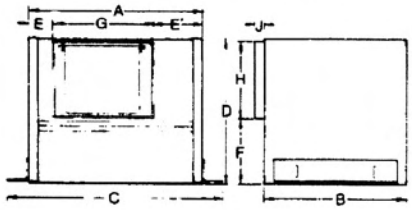

CV10

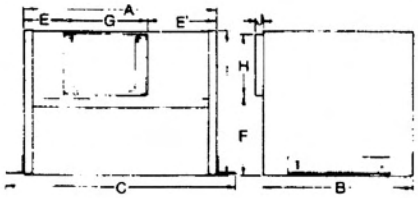

CV101, CV12

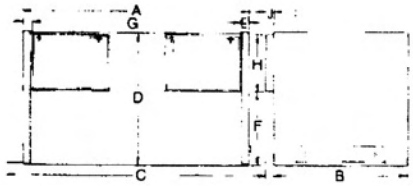

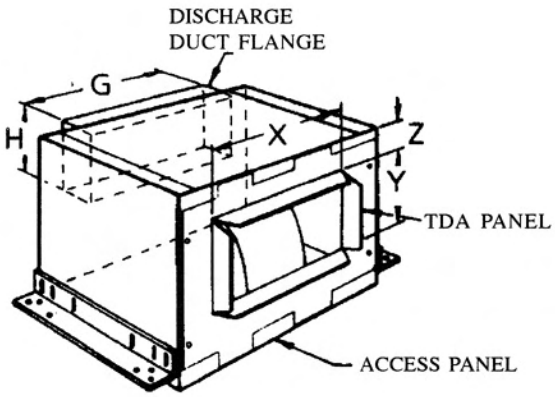

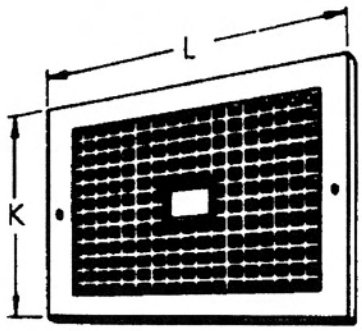

Typical Exploded Views

MODELS CV6, CV8, CV81, CV10

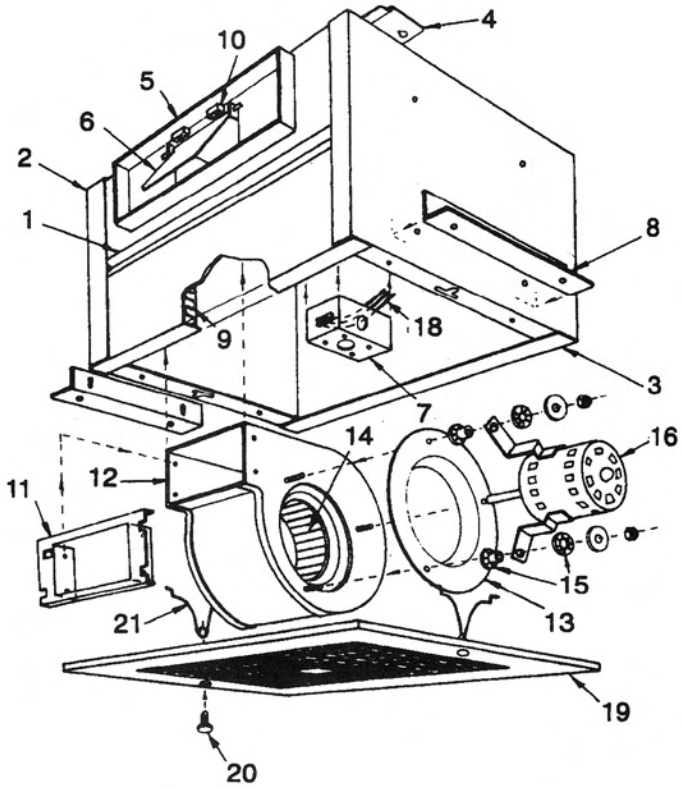

MODELS CV101, CV12

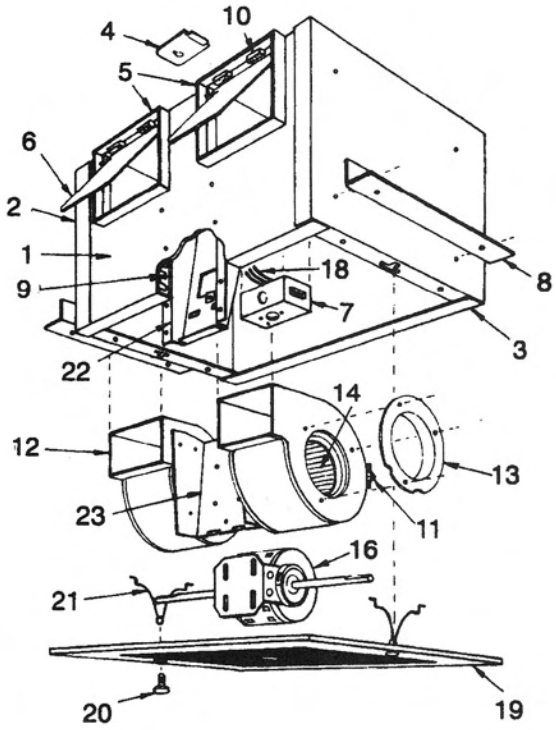

LEGEND

1. Housing
2. End
3. Access Panel
4. Wiring Box Cover Plate
5. Duct Flange
6. Damper Blade
7. Junction Box
8. Housing Bracket
9. Insulation; Parts A, B, & C
10. Damper Stop
11. Blower Bracket
12. Blower Housing Assembly
13. Inlet
14. Wheel
15. Grommets, 2 Part: Male & Female (single blower units only)
16. Motor (115/1/60)
17. TDA Panel (Blank Off Plate) (Not shown)
18. Wiring Assebly (2 & 3 Lead Versions) 3M Connector
19. Grille
20. Grille Button
21. Grille Spring
22. Box Brace (double blower units only)
23. Motor Plate (double blower units only)

PRINTED IN USA
59749-1

Super Q Ceiling and Inline Fans

NOTE

All motors are checked prior to shipment; however, if motor defects should develop, prompt service can be obtained from the nearest authorized service station of the motor manufacturer while under warranty. Exchange, repair or replacement will be provided on a no charge basis if the motor is defective within the warranty period. The Marley representative in your area will provide a name and address of an authorized service station if requested. DO NOT RETURN DEFECTIVE MOTORS TO MANUFACTURER. WARNING: Motor guarantee is void unless overload protection is provided in motor wiring circuit.

HIDDEN DANGER: In addition to the normal dangers of rotating machinery, fans present an additional hazard in their ability to suck in not only air, but loose materials as well. Solid objects can pass through the fan and be discharged by the impeller as potentially dangerous projectiles.

Intake to duct work should, whenever possible, be screened to prevent the accidental entrance of solid objects. Access doors or grille to a duct system should never be opened with the fan running.

When a fan is being started for the first time, a complete inspection of the duct work and interior of the fan should be made (with the power locked off) to make certain there is no foreign material which can be sucked into or blown through the duct work.

FAN GUARDS-INLET AND OUTLET GUARDS-DRIVE GUARDS:

All fans have moving parts which require guarding in the same way as other moving machinery. In areas which are accessible only to experienced personnel, a standard industrial type guard may be adequate. This type of guard will prevent the entry of thrown or dropped objects with a minimum restriction of air flow. Where the fan is accessible to untrained personnel or the general public, maximum safety guards should be used, even at the cost of some loss of performance. CAUTION: TO REDUCE THE RISK OF INJURY OF PERSON, INSTALL FAN AT LEAST 7 FEEL ABOVE THE FLOOR IF NO GUARD IS SUPPLIED. Roof-mounted equipment will require guards when access is possible, for example, by climbing children.

Centrifugal fans may be connected directly to duct work which will prevent contact with the internal moving parts, but when the inlet or outlet is exposed, a suitable guard should be installed.

CAUTION: DO NOT INSTALL IN COOKING OR SHOWER STALL AREA.

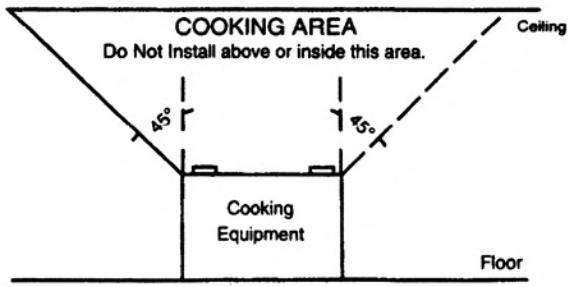

UNITS ARE DESIGNED TO HANDLE CLEAN AIR ONLY. AVOID INSTALLATION IN CORROSIVE AND DUSTY ENVIRONMENT.

WARNING: TO REDUCE THE RISK OF FIRE, ELECTRIC SHOCK OR INJURY TO PERSONS, OBSERVE THE FOLLOWING:

A. Use this unit only in the manner intended by the manufacturer, if you have questions, contact the manufacturer.

B. Before servicing or cleaning unit, switch power OFF at Service Panel and lock Service Panel to prevent power from being switched ON accidentally.

C. Installation work and electrical wiring must be done by qualified person(s) in accordance with applicable codes and standards, including fire-rated construction.

D. Sufficient air is needed for proper combustion and exhausting of gases through the flue (chimney) of fuel burning equipment to prevent back drafting. Follow the heating equipment manufacturer's guideline and safety standards such as those published by the National Fire Protection Association (NFPA), and the local code authorities.

E. When cutting or drilling into wall or ceiling, do not damage electrical wiring and other hidden utilities.

F. Ducted fans must always be vented to the outdoors.

G. If this unit is to be installed over a tub or shower, it must be marked as appropriate for the application and be connected to a GFCI (Ground Fault Circuit Interrupter) - protected branch circuit.

H. NEVER place a switch where it can be reached from a tub or shower.

CAUTION: FOR GENERAL VENTILATING USE ONLY, DO NOT USE TO EXHAUST HAZARDOUS OR EXPLOSIVE MATERIALS AND VAPORS.

Use CAUTION when handling sheet metal products. Protection should be used to avoid contact with sharp edges or injury may occur.

LIMITED WARRANTY

This Marley product is warranted to be free of defects in material and workmanship for 12 months from date of original purchase.

There is no other warranty, express or implied, except such as is expressly set forth herein. Seller will not be liable for any general, consequential, or incidental damages, including without limitation any damages for loss of use or loss of profits, for any breach of warranty or for negligence. Seller's liability and buyer's exclusive remedy are limited to the repair of defective goods or the shipment of equivalent goods, or the granting of a reasonable allowance on account of any defects, as the seller may elect.

TO OBTAIN PERFORMANCE UNDER THIS WARRANTY, YOU MUST:

1. Contact the Marley Engineered Products Service Center at 1-800-642-HEAT between the hours of 8:30 a.m. and 5:00 p.m. E.S.T. Monday through Friday.
2. Provide the model number of the product, part number of the product, the date of installation, and state the nature of the difficulty being experienced.
3. The Marley Service Representative will determine the best way to resolve the difficulty. If product return is authorized by the Marley Service Representative, send the product, freight prepaid, to: Marley Engineered Products, 470 Beauty Spot Road East, Bennettsville, SC 29512 USA. Shipment should be by the most economical means of transportation. No C.O.D. or air shipments will be accepted.

Products within warranty which have been installed and returned to the seller for repair will be repaired and returned as used products. Repairs to products outside the warranty period will be subjected to labor and parts charges.

Some states have enacted legislation which (a) does not allow the inclusion of limitations on incidental or consequential damages; (b) does not allow limitations on the length of a warranty period; (c) precludes exclusive, during the period of a limited warranty, of any implied warranties of merchantability or fitness for purpose.

To the extent of such provisions being applicable in your state, the limitations in this warranty may not apply.

TO ENSURE SAFE OPERATION:

- Be sure that this unit is correctly installed and wired by a qualified installer in accordance with the instructions and applicable NEC or equivalent codes.
- Be sure that operating instructions are followed and that moving and heating parts are kept clean and free from obstructions.

Any warranties granted or liabilities assumed hereunder will not apply to goods that have been damaged in transit, altered, repaired, installed or operated otherwise than in conformity with the above requirements for safe operation.

SUPER Q CONVERSION INSTRUCTIONS
MODELS: CV6, CV8, CV81 & CV10

CEILING FAN CONVERSIONS

RIGHT ANGLE (RA) TO TOP DISCHARGE (TD) CONVERSION

NOTE: As a standard, fans are furnished with a Right Angle (RA) discharge as shown in Fig. 1.

1) DISASSEMBLE THE ACCESS PANEL FROM THE HOUSING; FIRST REMOVE THE TWO #10 SHEET METAL SCREWS, THEN REMOVE The PANEL BY PULLING IT TOWARDS THE HOUSING OPENING AS SHOWN IN FIG. 1.

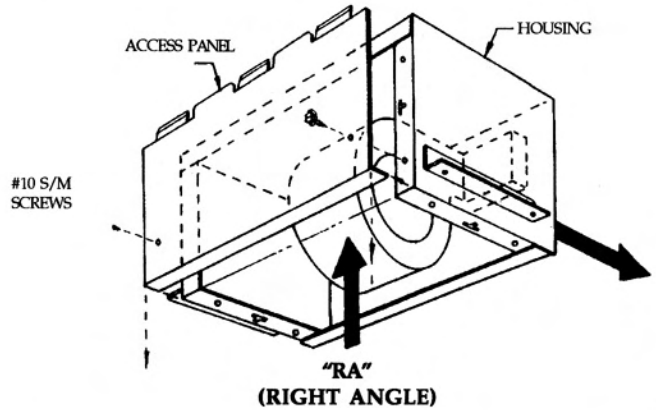

FIG.1

2) REASSEMBLE THE ACCESS PANEL; ROTATE THE ACCESS PANEL 90 DEGREES AMD REMOUNT IT TO THE HOUSING. SLIDE IN THE 3 LOCKING TABS TO THE HOUSING FLANGE AND REINSTALL THE TWO #10 SCREWS. SEE FIG. 2.

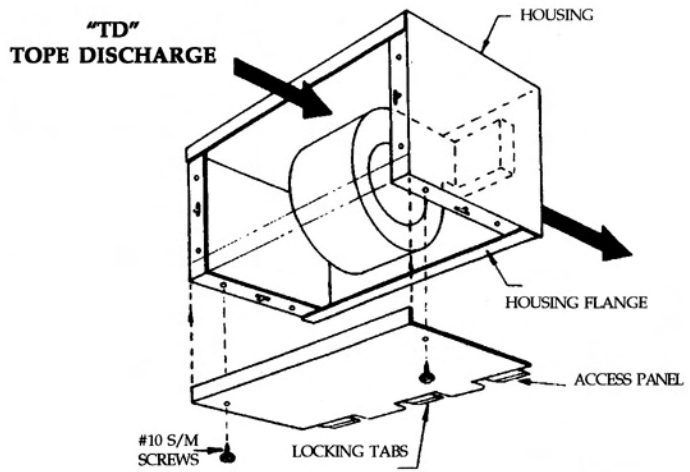

FIG.2

IN-LINE FAN CONVERSIONS

IN-LINE TO RIGHT ANGLE DISCHARGE CONVERSION

NOTE: As a standard, fans are furnished with an IN-LINE discharge as shown in Fig. 3.

1) DISASSEMBLE THE TDA PANEL FROM THE HOUSING; FIRST REMOVE THE FOUR #10 SHEET METAL SCREWS SECURING THE TDA PANEL TO THE HOUSING, THEN REMOVE THE ACCESS PANEL BY REMOVING THE TWO #10 SCREWS. PULL BOTH PANELS AWAY FROM THE HOUSING AS SHOWN IN FIG. 3.

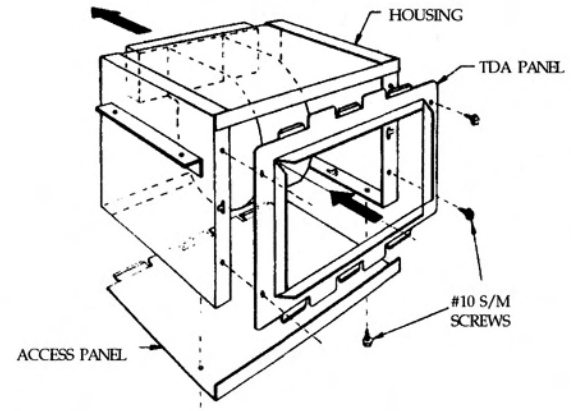

FIG.3

2) REASSEMBLE THE TDA AND ACCESS PANELS AFTER EXCHANGING LOCATIONS; FIRST SLIDE THE 3 LOCKING TABS OF THE TDA PANEL INTO THE HOUSING FLANGE. NEXT SLIDE THE 3 TABS OF THE ACCESS PANEL INTO THE HOUSING.
NEXT ENGAGE THE ACCESS PANEL RETURN FLANGE INTO THE 3 LOCKING TABS ON THE TDA PANEL. FINALLY REINSTALL THE SIX #10 SCREWS. SEE FIG. 4

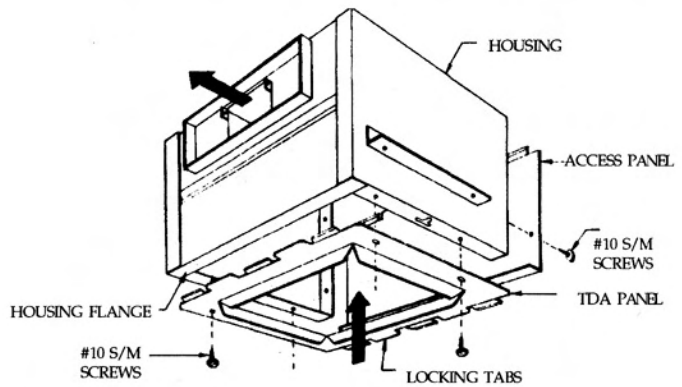

FIG.4

TOOLS REQUIRED FOR CONVERSION
1 5/16" NUT DRIVER OR SLOTTED SCREWDRIVER

PRINTED IN USA
59749-1

SUPER Q CONVERSION INSTRUCTIONS
MODELS: CV101 & CV12

CEILING FAN CONVERSIONS

RIGHT ANGLE (RA) TO TOP DISCHARGE (TD) CONVERSION

NOTE: As a standard, Super Q RA/TD's are furnished with a Right Angle (RA) discharge as shown in Fig. 1.

1) DISASSEMBLE THE ACCESS PANEL FROM THE HOUSING; FIRST REMOVE THE FOUR #10 SHEET METAL SCREWS, THEN REMOVE THE PANEL AS SHOWN IN FIG. 1.

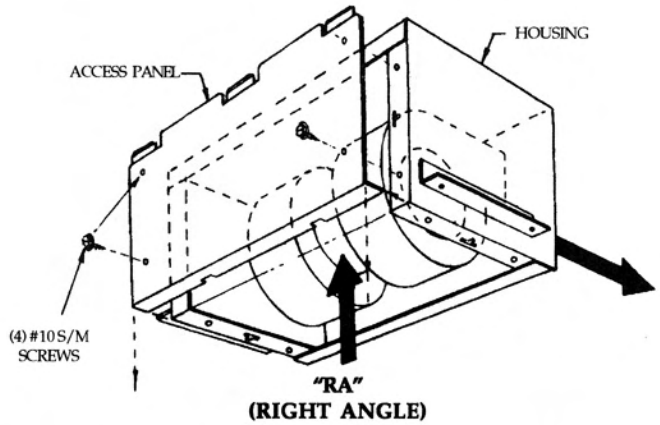

FIG.1

2) REASSEMBLE THE ACCESS PANEL; ROTATE THE ACCESS PANEL 90 DEGREES AND REMOUNT IT TO THE HOUSING. REINSTALL THE FOUR #10 SCREWS. SEE FIG. 2.

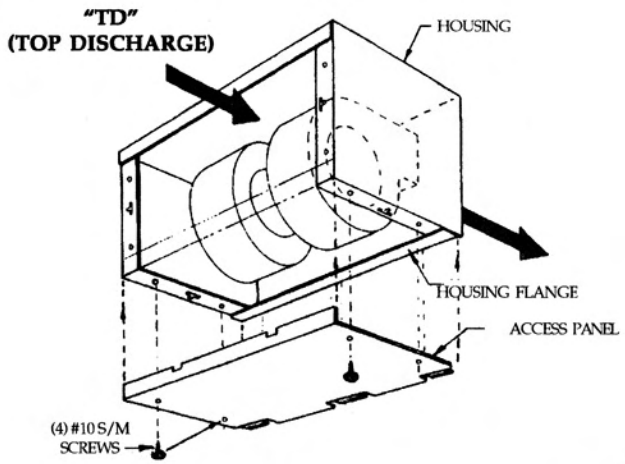

FIG.2

IN-LINE FAN CONVERSIONS

IN-LINE TO RIGHT ANGLE DISCHARGE CONVERSION

NOTE: As a standard, Super Q TDA's are furnished with an IN-LINE discharge as shown in Fig. 3.

1) DISASSEMBLE THE TDA PANEL FROM THE HOUSING; FIRST REMOVE THE FOUR #10 SHEET METAL SCREWS SECURING THE TDA PANEL TO THE HOUSING, THEN REMOVE THE ACCESS PANEL BY REMOVING THE FOUR #10 SCREWS. REMOVE BOTH PANELS AS SHOWN IN FIG. 3.

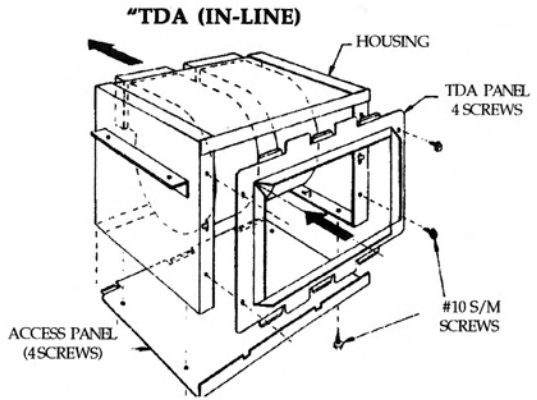

FIG.3

2) REASSEMBLE BOTH THE TDA AND ACCESS PANELS AFTER EXCHANGING LOCATIONS; FIRST SLIDE THE 3 LOCKING TABS OF THE TDA PANEL INTO THE HOUSING FLANGE.
NEXT ENGAGE THE ACCESS PANEL RETURN FLANGE INTO THE 3 LOCKING TABS ON THE TDA PANEL. FINALLY REINSTALL THE EIGHT #10 SCREWS. SEE FIG. 4.

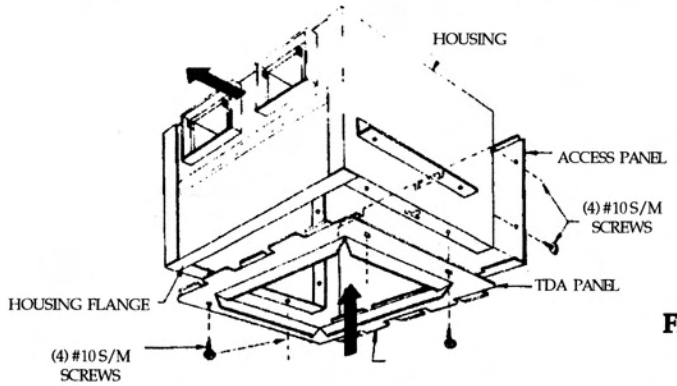

FIG.4

TOOLS REQUIRED FOR CONVERSION
1 5/16" NUT DRIVER OR SLOTTED SCREWDRIVER

PRINTED IN USA
59749-1