BELT DRIVE ROOF VENTILATORS

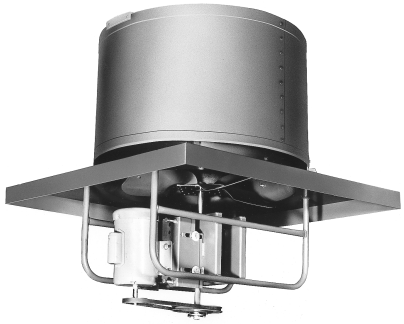

- Standard props are heavy gauge steel.
- Belt drive heavy duty industrial construction.
- Totally enclosed motor standard. ODP optional.
- Low noise level.
- Rolled inlet venturi for efficient air flow.
- Butterfly damper axles pivot on self-lubricating nylon bearings. Damper edge tapered for weather seal.
- Wind band is 18 gauge galvanized with 2" double rolled edge top and bottom for added strength.
- Rubber shim under dampers for better seal.
- Rubber damper stops for quiet operation.
- Acid resistant coatings available. Consult factory for pricing.
- Back draft dampers can be provided in curb base only.
- Size of roof opening to be 6" larger than fan size (B dimensions).
- For explosion proof models, consult factory representative.

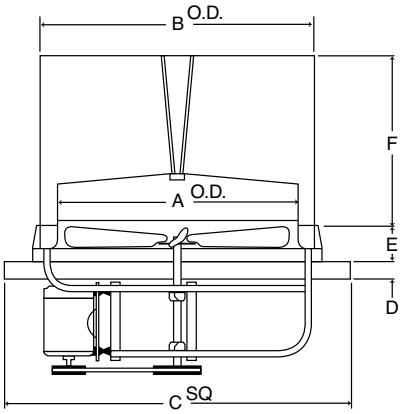

Dimensions

FAN SIZE	A	B	C	D	E	F
24"	25"	30"	39"	2½"	3"	19"
30"	31"	36"	45"	2½"	3"	22"
36"	37"	42"	51"	2½"	3"	25"
42"	43"	48"	57"	2½"	3"	27"
48"	49"	54"	63"	2½"	3"	30"
54"	55"	60"	69"	2½"	3"	36"
60"	61"	66"	75"	2½"	3"	42"

Ordering Summary

1-PHASE 115/230V	3-PHASE 230/460V			FAN	CFM-STATIC PRESSURE					APPROX DB@	SHP.	LIST ODP		LIST TE	
MODEL NO.	MODEL NO.	SIZE	HP	RPM	0"	⅛"	¼"	⅜"	½"	10'	WT.	1PH.	3PH.	1PH.	3PH.
RVB24131	**RVB24133**	24	1/3	850	4940	4180				64	300	•	•	•	•
RVB24121	**RVB24123**	24	1/2	980	5650	5080	4320	4010		66	350	•	•	•	•
RVB24341	**RVB24343**	24	3/4	1140	6620	6110	5410	5090	4370	71	308	•	•	•	•
RVB30121	**RVB30123**	30	1/2	675	7650	–	–	–	–	64	345	•	•	•	•
RVB30341	**RVB30343**	30	3/4	770	8710	7830	–	–	–	66	355	•	•	•	•
RVB3011	**RVB3013**	30	1	850	9690	8830	7650	–	–	71	365	•	•	•	•
RVB36341	**RVB36343**	36	3/4	570	11160	–	–	–	–	68	365	•	•	•	•
RVB3611	**RVB3613**	36	1	630	12350	11020	–	–	–	70	385	•	•	•	•
RVB4211	**RVB4213**	42	1	580	15100	–	–	–	–	69	570	•	•	•	•
RVB421121	**RVB421123**	42	1 1/2	660	17290	15670	–	–	–	71	585	•	•	•	•
RVB4221	**RVB4223**	42	2	735	19010	18130	16640	–	–	74	595	•	•	•	•
–	**RVB4233**	42	3	840	21850	21020	19950	18290	16620	79	615	–	•	–	•
RVB481121	**RVB481123**	48	1 1/2	545	21280	19370	–	–	–	72	720	•	•	•	•
RVB4821	**RVB4823**	48	2	600	23420	21750	19380	–	–	74	730	•	•	•	•
–	**RVB4833**	48	3	685	26790	25360	23370	21090	19090	80	740	–	•	–	•
–	**RVB5433**	54	3	570	32110	30020	27360	23940	–	80	910	–	•	–	•
–	**RVB5453**	54	5	675	37900	36290	34200	31540	28880	82	930	–	•	–	•
–	**RVB6033**	60	3	450	34660	31920	–	–	–	84	1050	–	•	–	•
–	**RVB6053**	60	5	535	40940	38950	35620	31820	–	86	1050	–	•	–	•
–	**RVB607123**	60	7 1/2	610	46780	45220	42750	39420	35625	88	1115				

NOTE: When ordering, add suffixes as follows:
Open Drip Proof = ODP; Totally Enclosed = TE

All units are made to order and are not returnable.