RUX SERIES
Explosion-Proof Unit Heater

HARSH ENVIRONMENT PRODUCTS

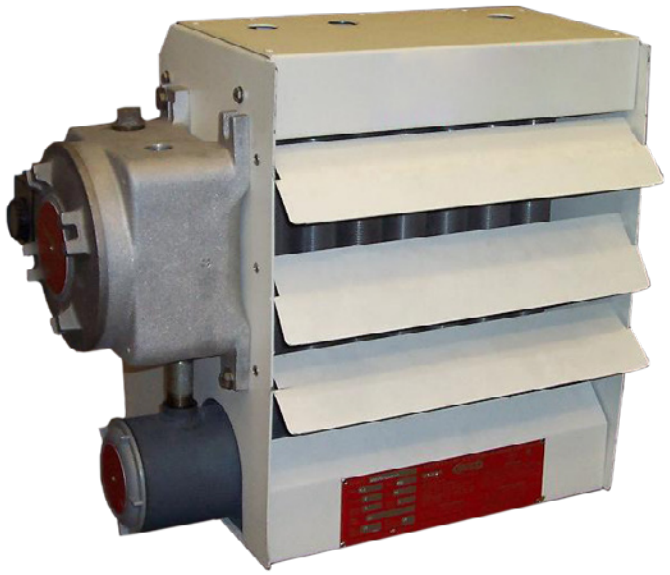

Technical Specifications:

Temp Range: 50°–120°F (10°–49°C)
CFM: 550–3850

Classes:

Class I, Divisions 1 and 2, Groups C & D
Class II, Divisions 1 and 2, Groups E, F & G
Class I, Zones 1 and 2, Group IIB

Ideal Spaces:

Aircraft Hangars/Service Areas
Chemical Storage/Handling Areas
Coal Preparation Plants
Compressor Stations
Grain Elevators
Petrochemical Plants
Oil Refineries & Rigs
Paint Storage Areas
Spray Booths

Beige

- Welded steel heat exchanger with powder-coated cabinet for dry, non-corrosive areas
- Industry's lowest ignition temperature code rating, T3C, 320°F (160°C)
- Automatic and manual reset overtemperature cutouts
- Low 70 PSIG relief valve setting—in an emergency, the initial escaping vapor is below the ignition temperature

Standard Construction Features:

- Industrial grade, corrosion resistant cabinet/louvers fabricated from beige powder coated 14-gauge galvanized steel with minimum opening safety stops
- Industrial grade heating elements are treated, to provide freeze protection as low as -49°F (-45°C)
- The prewired fan motor assembly has double-shielded, permanently lubricated ball bearings and automatic reset line breaking thermal overload protection—separate field wiring to the motor is not required
- Factory built-in controls include overtemperature cutouts, controlling magnetic contactor, and 24-volt control circuit transformer housed in a NEMA 7, 9 cast aluminum enclosure

C US

1 YEAR WARRANTY ELEMENT

1 YEAR WARRANTY WORKMANSHIP

RUX SERIES
Explosion-Proof Unit Heater

60 Hz Models & Specifications:

ITEM INFORMATION		ELECTRICAL DATA				MOTOR			AIR FLOW			FRAME SIZE	SHIP WT.
	CATALOG NO.	VOLTS	PHASE	TOTAL AMPS*	KW	HP	RPM	FAN BLADE DIAMETER	RISE**	CFM	THROW		
●	RUX-233-FA-0036C	208	1	17	3.0	¼	1725	12″	15°F	650	15″	1	130 lbs
●	RUX-233-FA-0036J	240	1	15		¼	1725	12″	15°F	650	15″	1	130 lbs
●	RUX-233-FA-0036D	208	3	10		¼	1725	12″	15°F	650	15″	1	130 lbs
●	RUX-233-FA-0036K	240	3	9		¼	1725	12″	15°F	650	15″	1	130 lbs
●	RUX-233-FA-0036U	480	3	5		¼	1725	12″	15°F	650	15″	1	130 lbs
●	RUX-233-FA-0036Z	600	3	4		¼	1725	12″	15°F	650	15″	1	130 lbs
●	RUX-233-FA-0056C	208	1	26	5.0	¼	1725	12″	25°F	650	15″	1	130 lbs
●	RUX-233-FA-0056J	240	1	23		¼	1725	12″	25°F	650	15″	1	130 lbs
●	RUX-233-FA-0056D	208	3	16		¼	1725	12″	25°F	650	15″	1	130 lbs
●	RUX-233-FA-0056K	240	3	14		¼	1725	12″	25°F	650	15″	1	130 lbs
●	RUX-233-FA-0056U	480	3	7		¼	1725	12″	25°F	650	15″	1	130 lbs
●	RUX-233-FA-0056Z	600	3	6		¼	1725	12″	25°F	650	15″	1	130 lbs
●	RUX-233-FA-0086C	208	1	38	7.5	¼	1725	12″	28°F	850	25″	1	130 lbs
●	RUX-233-FA-0086J	240	1	34		¼	1725	12″	28°F	850	25″	1	130 lbs
●	RUX-233-FA-0086D	208	3	23		¼	1725	12″	28°F	850	25″	1	130 lbs
●	RUX-233-FA-0086K	240	3	20		¼	1725	12″	28°F	850	25″	1	130 lbs
●	RUX-233-FA-0086U	480	3	10		¼	1725	12″	28°F	850	25″	1	130 lbs
●	RUX-233-FA-0086Z	600	3	9		¼	1725	12″	28°F	850	25″	1	130 lbs
●	RUX-233-FA-0106J	240	1	44	10	¼	1725	12″	38°F	850	25″	1	130 lbs
●	RUX-233-FA-0106D	208	3	30		¼	1725	12″	38°F	850	25″	1	130 lbs
●	RUX-233-FA-0106K	240	3	26		¼	1725	12″	38°F	850	25″	1	130 lbs
●	RUX-233-FA-0106U	480	3	13		¼	1725	12″	38°F	850	25″	1	130 lbs
●	RUX-233-FA-0106Z	600	3	11		¼	1725	12″	38°F	850	25″	1	130 lbs
●	RUX-233-FB-0156D	208	3	44	15	¼	1725	16″	27°F	1800	45″	2	169 lbs
●	RUX-233-FB-0156K	240	3	38		¼	1725	16″	27°F	1800	45″	2	169 lbs
●	RUX-233-FB-0156U	480	3	19		¼	1725	16″	27°F	1800	45″	2	169 lbs
●	RUX-233-FB-0156Z	600	3	16		¼	1725	16″	27°F	1800	45″	2	169 lbs
●	RUX-233-FB-0206U	480	3	25	20	¼	1725	16″	35°F	1800	45″	2	169 lbs
●	RUX-233-FB-0206Z	600	3	21		¼	1725	16″	35°F	1800	45″	2	169 lbs
●	RUX-233-FC-0256U	480	3	31	25	½	1725	20″	26°F	3110	65″	3	216 lbs
●	RUX-233-FC-0256Z	600	3	25		½	1725	20″	26°F	3110	65″	3	216 lbs
●	RUX-233-FC-0306U	480	3	37	30	½	1725	20″	25°F	3850	75″	3	216 lbs
●	RUX-233-FC-0306Z	600	3	30		½	1725	20″	25°F	3850	75″	3	216 lbs
●	RUX-233-FC-0356U	480	3	43	35	½	1725	20″	29°F	3850	75″	3	216 lbs
●	RUX-233-FC-0356Z	600	3	35		½	1725	20″	29°F	3850	75″	3	216 lbs

SKU Legend: ◆ **= Popular Products** ● **= Extended Offering** ■ **= Made to Order** (Contact your local Marley Sales Representative for typically associated lead times)

*Total Amps = Heating element and motor amps. **Approximate air temperature rise

RUX SERIES
Explosion-Proof Unit Heater

50 Hz Models & Specifications:

ITEM INFORMATION		ELECTRICAL DATA				MOTOR			AIR FLOW			FRAME SIZE	SHIP WT.
	CATALOG NO.	VOLTS	PHASE	TOTAL AMPS	KW	HP	RPM	FAN BLADE DIAMETER	RISE**	CFM	THROW		
■	RUX-233-FA-0036E	220	1	14	2.5	¼	1438	12″	14°F	550	13″	1	130 lbs
■	RUX-233-FA-0036F	220	3	9		¼	1438	12″	14°F	550	13″	1	130 lbs
■	RUX-233-FA-0036G	380	3	6		¼	1438	12″	14°F	550	13″	1	130 lbs
■	RUX-233-FA-0036H	400	3	6		¼	1438	12″	14°F	550	13″	1	130 lbs
■	RUX-233-FA-0036I	415	3	5		¼	1438	12″	14°F	550	13″	1	130 lbs
■	RUX-233-FA-0056E	220	1	21	4.2	¼	1438	12″	24°F	550	13″	1	130 lbs
■	RUX-233-FA-0056F	220	3	13		¼	1438	12″	24°F	550	13″	1	130 lbs
■	RUX-233-FA-0056G	380	3	9		¼	1438	12″	24°F	550	13″	1	130 lbs
■	RUX-233-FA-0056H	400	3	8		¼	1438	12″	24°F	550	13″	1	130 lbs
■	RUX-233-FA-0056I	415	3	7		¼	1438	12″	24°F	550	13″	1	130 lbs
■	RUX-233-FA-0076E	220	1	31	6.3	¼	1438	12″	28°F	700	22″	1	130 lbs
■	RUX-233-FA-0076F	220	3	19		¼	1438	12″	28°F	700	22″	1	130 lbs
■	RUX-233-FA-0076G	380	3	12		¼	1438	12″	28°F	700	22″	1	130 lbs
■	RUX-233-FA-0076H	400	3	11		¼	1438	12″	28°F	700	22″	1	130 lbs
■	RUX-233-FA-0076I	415	3	10		¼	1438	12″	28°F	700	22″	1	130 lbs
■	RUX-233-FA-0096E	220	1	40	8.4	¼	1438	12″	38°F	700	22″	1	130 lbs
■	RUX-233-FA-0096F	220	3	24		¼	1438	12″	38°F	700	22″	1	130 lbs
■	RUX-233-FA-0096G	380	3	15		¼	1438	12″	38°F	700	22″	1	130 lbs
■	RUX-233-FA-0096H	400	3	13		¼	1438	12″	38°F	700	22″	1	130 lbs
■	RUX-233-FA-0096I	415	3	13		¼	1438	12″	38°F	700	22″	1	130 lbs
■	RUX-233-FB-0136F	220	3	35	12.5	¼	1438	16″	26°F	1500	39″	2	169 lbs
■	RUX-233-FB-0136G	380	3	21		¼	1438	16″	26°F	1500	39″	2	169 lbs
■	RUX-233-FB-0136H	400	3	19		¼	1438	16″	26°F	1500	39″	2	169 lbs
■	RUX-233-FB-0136I	415	3	18		¼	1438	16″	26°F	1500	39″	2	169 lbs
■	RUX-233-FB-0176F	220	3	46	16.7	¼	1438	16″	35°F	1500	39″	2	169 lbs
■	RUX-233-FB-0176G	380	3	28		¼	1438	16″	35°F	1500	39″	2	169 lbs
■	RUX-233-FB-0176H	400	3	25		¼	1438	16″	35°F	1500	39″	2	169 lbs
■	RUX-233-FB-0176I	415	3	24		¼	1438	16″	35°F	1500	39″	2	169 lbs
■	RUX-233-FC-0216G	380	3	33	21	½	1438	20″	26°F	2600	57″	3	216 lbs
■	RUX-233-FC-0216H	400	3	32		½	1438	20″	26°F	2600	57″	3	216 lbs
■	RUX-233-FC-0216I	415	3	31		½	1438	20″	26°F	2600	57″	3	216 lbs
■	RUX-233-FC-0256G	380	3	39	25	½	1438	20″	30°F	2600	57″	3	216 lbs
■	RUX-233-FC-0256H	400	3	37		½	1438	20″	30°F	2600	57″	3	216 lbs
■	RUX-233-FC-0256I	415	3	36		½	1438	20″	30°F	2600	57″	3	216 lbs

SKU Legend: ◆ **= Popular Products** ● **= Extended Offering** ■ **= Made to Order** (Contact your local Marley Sales Representative for typically associated lead times)

*Total Amps = Heating element and motor amps

RUX SERIES
Explosion-Proof Unit Heater

Factory Built-in Options:

	CATALOG NO.	OPTION	DESCRIPTION
●	D	Disconnect Switch	Factory installed on the unit heater above the control enclosure. This is an inexpensive and positive way to meet NEC/CEC requirements for a disconnecting means within sight of the heater.
●	K	"Warning" Pilot Light	Indicates when the thermal cutouts have tripped and the unit heater needs servicing. ***Not available with combination V & L***.
●	L	"Heater On" Pilot Light	Indicates when the electric heating elements are energized. ***Not available with combination V & K***
●	M	Manual Reset Thermal Cutout with Backup Contactor	A pilot duty manual reset thermal cutout with a backup contactor is provided for independent secondary overtemperature protection. ***Cannot be installed with S, S1 or V***.
●	S	Auto/Fan Selector Switch	A two-position switch wired to the control circuit for auto (automatic heat) and fan only control. ***Cannot be installed with M, V or S1***.
●	S1	Built-In Controls for Remote Auto/Fan Selector Switch	Unit is prewired for field addition of remote auto/fan selector switch. ***Cannot be installed with M, V or S***.
●	T	Adjustable Thermostat	Factory installed and prewired to the control enclosure. Thermostat is adjustable from 50° to 90° F (10° to 32°C).
●	T1	Adjustable Thermostat for Wet Locations	Factory installed and prewired to the control enclosure. Thermostat is adjustable from 40° to 80° F (5° to 25°C). Can be specified for all constructions.
●	V	120 Volt Control Circuit	Can be provided when required for special external thermostat circuit. ***Cannot be installed with S, S1, M or the combination of both K & L together***.

SKU Legend: ◆ **= Popular Products** ● **= Extended Offering** ■ **= Made to Order** (Contact your local Marley Sales Representative for typically associated lead times)

Note: Both pilot lights (K & L) are not available with 120V option (V). Only one pilot light can be ordered with 120V control heaters.

Standard Mounting Kits:

CATALOG NO.	DESCRIPTION
1022451	Ceiling Mounting Kit
1022454	Wall Mounting Kit
1022457	Pole Mounting Kit

Note: One kit required per heater. Work with all frame sizes

Accessory Remote Thermostats:

CATALOG NO.	SWITCH TYPE	TYPE	RATING	TEMP RANGE	DESCRIPTION
1007002	Bimetal	SPDT	125–277V, 22A	50°–90°F (10°–32°C)	Class 1, Div. 1, Groups C & D. Class II, Div. 1, Groups E, F, & G
BX-1024754	Bulb and Capillary with Internal Set Point Adjustment	SPDT	120–240V, 25A 277V, 22A	40°–120°F (5°–49°C)	Class 1, Div. 1, Groups B, C & D. Class II, Div. 1, Groups E, F, & G
BX-1025396		SPST	120–240V, 25A 277V, 22A	40°–120°F (5°–49°C)	Corrosion-Resistant Class 1, Div. 1, Groups B, C, & D. Class II, Div. 1, Groups E, F & G
1036506	Bimetal	SPDT	480V, 15A	40°–80°F (5°–25°C)	Class I, Div. 1, Groups C & D. Class II, Div. 1, Groups E, F, & G. Class III. IP66, Type 4

Remote Fan Switch:

CATALOG NO.	SWITCH TYPE	RATING	HUBS	DESCRIPTION
1001744	2-Position	120/277V, 30A	(2) ¾" NPT Hubs	Class I, Div. 1, Groups C & D. Class II, Div. 1, Groups E, F, & G. Class III
1031042	2-Position	110V, 6A		Class I, Div. 1, Groups C & D. Class II, Div. 1, Groups E, F, & G. Class III. NEMA 4X

RUX SERIES
Explosion-Proof Unit Heater

Scan the QR code to access additional specs and features

Dimensions and Clearances:

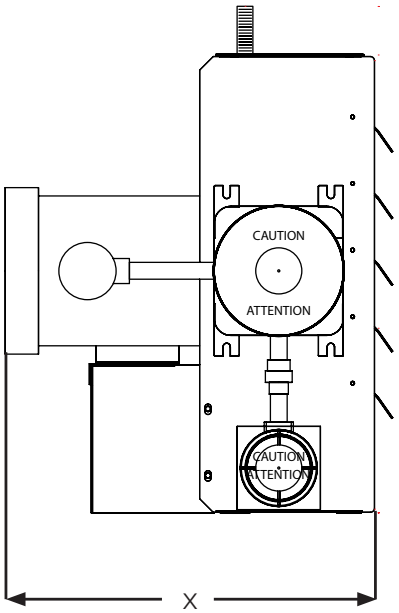

Side View

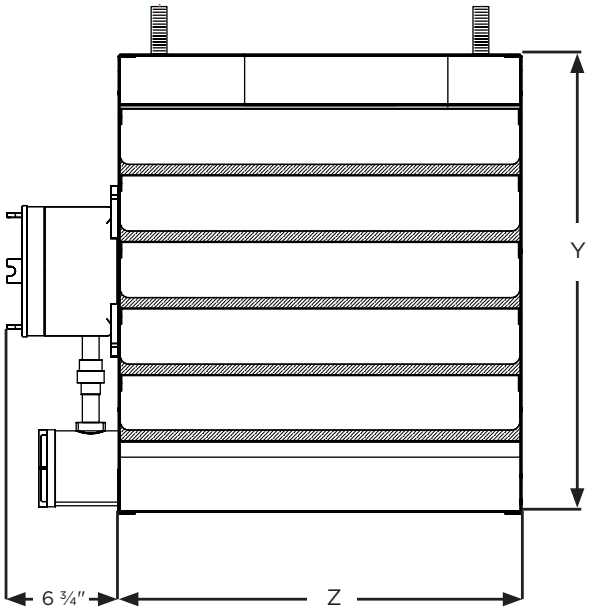

Front View

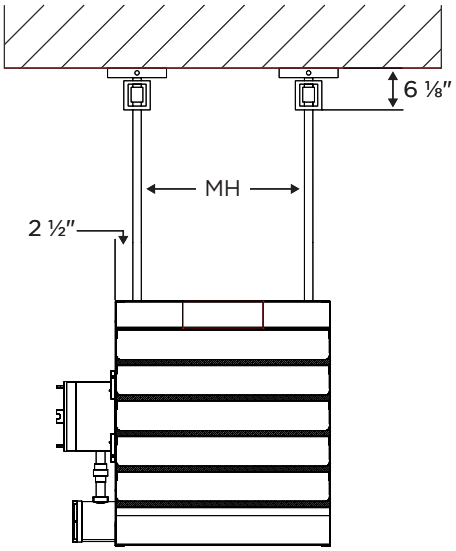

Ceiling Mounting Kit

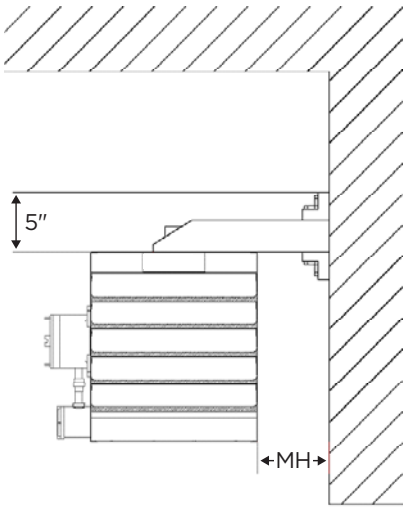

Wall Mounting Kit

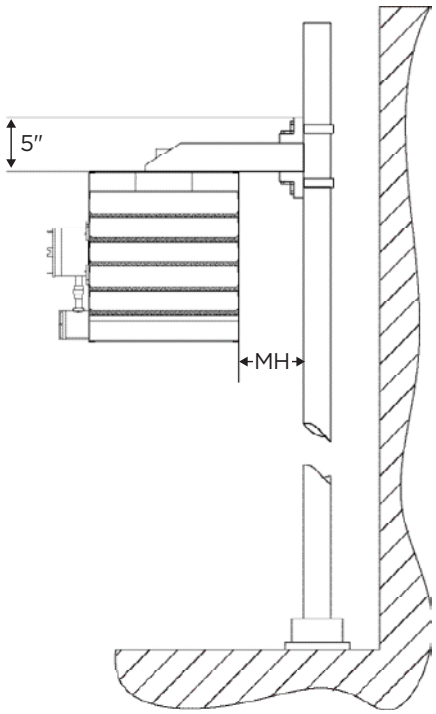

Pole Mounting Kit

SIZE	X	Y	Z	MH	MW
1	22 ½"	19 ⅜"	16 1⁄16"	11 1⁄16"	9"
2	22 ½"	23 ⅜"	20 3⁄16"	15 1⁄16"	7"
3	22 ¾"	27 ⅜"	24 3⁄16"	19 1⁄16"	5"