BERKO®
A Marley Engineered Products Brand
470 Beauty Spot Rd. E
Bennettsville, SC 29512

SUBMITTAL SHEET
QTS SERIES
TOE SPACE FAN-FORCED HEATER

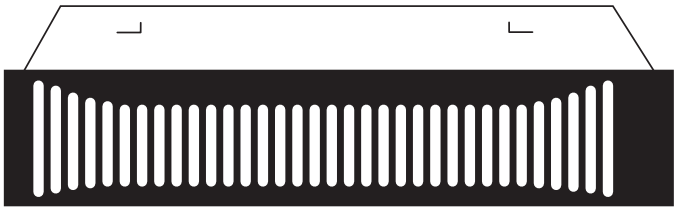

Intertek

CAPACITIES
120, 240, 208, 120, or 240/208V Thermostat Range: 45°–85°F

See Selection Chart for all Options

JOB NAME: _____

LOCATION: _____

ARCHITECT: _____

ENGINEER: _____

CONTRACTOR: _____

SUBMITTED BY: _____ DATE: _____

TAG/ITEM	QTY.	CATALOG NUMBER	HEATER			AMPS	BUILT-IN CONTROLS
			KW	VOLTS	Ø		

ACCESSORIES AND CONTROLS	TAG/ITEM	QTY.	CATALOG NUMBER	DESCRIPTION

SUBMITTED BY:	DATE

APPROVED BY:	DATE

QTS SERIES

ARCHITECT'S AND ENGINEER'S SPECIFICATIONS*

The heating equipment shall include an electric QTS Series fan-forced air heater suitable for installing in toe space areas under cabinets or stairs as manufactured by Berko®, a Marley Engineered Products® Brand, Bennettsville, SC. Heaters shall be cETLus Listed.

BACK BOX: The back box shall be commercial grade galvanized steel and shall contain knockouts through which field wiring leads enter the box. A ground wire pigtail lead shall be attached to the back box.

INNER FRAME ASSEMBLY: The inner frame assembly shall consist of a commercial grade galvanized steel chassis on which are mounted the heating elements, fan motor and tangential blower, and over temperature protectors. The inner frame assembly shall be completely prewired with a plug connection for power wiring. Pigtail leads are provided for thermostat wiring. The inner frame assembly shall lock into the back box without fasteners.

HEATING ELEMENT: The heating element shall be of non-glowing design consisting of 80% nickel, 20% chromium resistance wire enclosed in a steel sheath to which steel plate fins are brazed. The element shall cover the entire air discharge area to ensure uniform heating of all discharge air. The wattage output of the unit shall be adjustable by removing a jumper wire.

MOTOR AND CONTROLS: The fan motor shall be impedance protected and permanently lubricated. An optional single pole thermostat accessory shall be specified when the unit will not utilize a single pole wall thermostat. Note: Three conductor wire is required when a two pole thermostat is used.

The over temperature protector shall be bi-metallic, snap-action type designed to shut off heater in the event of overheating. A pilot light shall be provided that will illuminate if the over temperature protector operates. A thermal fuse shall provide secondary thermal cut-out for added safety

FRONT COVER: The front cover shall be of commercial grade steel finished in Black or White polyester powder paint. It will attach to the back box with two screws.

*Berko *reserves the right to change specifications without prior notice.*

Models & Specifications:

		ELECTRICAL DATA			
CATALOG NO.	UPC	VOLTS	WATTS	AMPS	SHIP WT.
QTS1100*	685360065380	120	1125/563	9.4/4.7	10 lbs
QTS1104*	685360065397	240	1125/563	4.7/2.3	10 lbs
		208	844/422	4.1/2.0	
QTS1500T**	685360065410	120	1500/750	12.5/6.3	11 lbs
QTS1504T**	685360065434	240/208	1500/750	6.3/3.1	11 lbs
			1125/564	5.4/2.7	

*Models require QTSTSP or remote wall-mounted thermostat. **Models shipped with single-pole thermostat installed. Add NW to catalog number for White (ex. QTS1100NW).

Optional Accessories:

CATALOG NO.	UPC	DESCRIPTION	SHIP WT.
QTSAG	685360065328	Adapter Grille 3 ½" H x 23 ⅜" W	1 lbs
QTSTSP	685360065335	120–240V Thermostat Kit	1 lbs

Dimensions and Clearances:

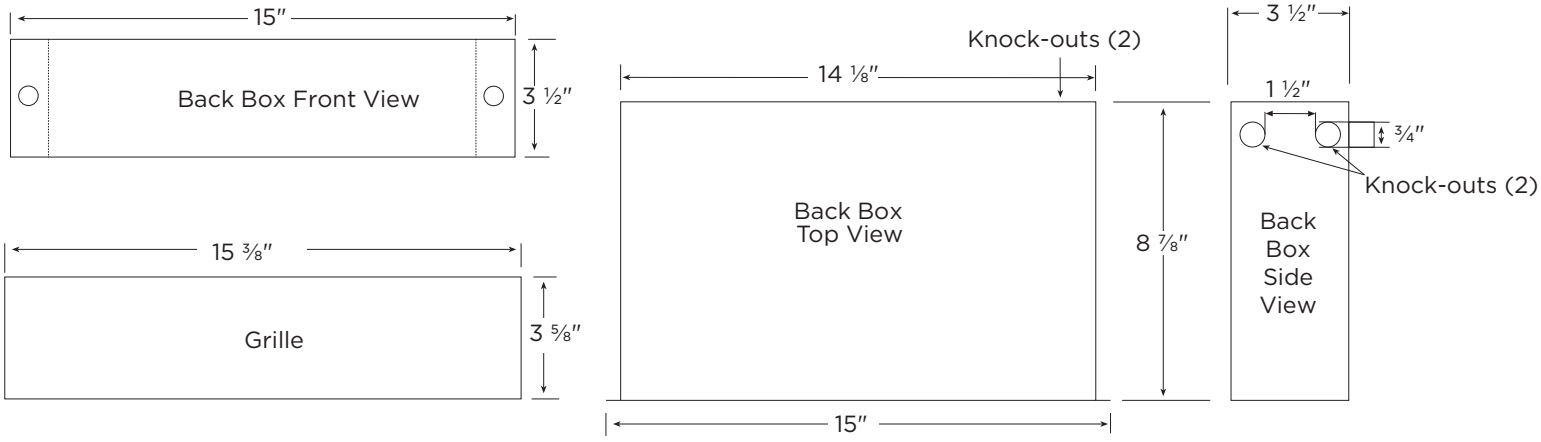

No matter the industry or application, Marley Engineered Products has a robust portfolio of innovative, reliable, high-performance comfort heating and ventilation solutions for all your heating needs.

For more information or assistance on your next project, contact Technical Services at 800-642-4328

Scan the QR code to access additional specs and features

Approvals: _____ _____ _____