BERKO®
A Marley Engineered Products Brand
470 Beauty Spot Rd. E, Bennettsville, SC 29512

QFG SERIES
ZONAL FAN-FORCED WALL HEATER SUBMITTAL SHEET

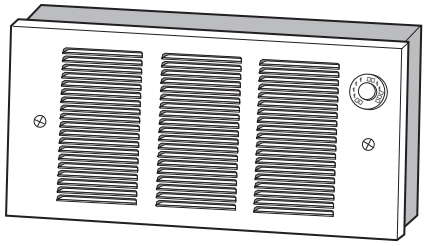

CAPACITIES
500, 750, 1000, 1125, 1500,
1688, 2000 or 2250 Watts
120, 208, 240V
1Ø only

c UL us

Patented Clip-In-Fit
(US Patent No. 6,172,343)

ITEM	QTY.	CATALOG NUMBER	TAG	WATTS	VOLTS	Ø	AMPS	BUILT-IN CONTROLS

ACCESSORIES & CONTROLS

ITEM	QTY.	CAT. NO.	TAG	DESCRIPTION

SUBMITTED BY:	DATE

APPROVED BY:	DATE

QFG SERIES - ZONAL FAN FORCED WALL HEATERS

QFG SERIES

BERKO®

A Marley Engineered Products Brand

470 Beauty Spot Rd. E, Bennettsville, SC 29512

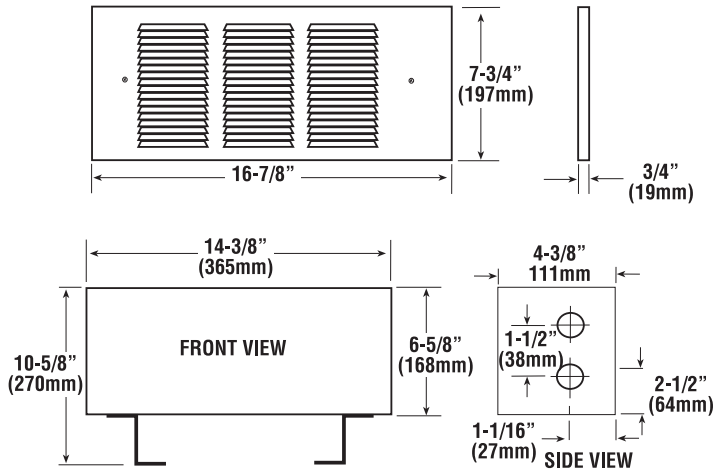

MOUNTING LIMITATION

For wall mounting only. Do not install back box closer than 4 inches from floor, 6 inch from adjacent walls and 36 inches from the ceiling. Do not install heater behind towel rack, behind door, in floor, in closet, in ceiling or where airflow may be obstructed. To insure proper operation, maintain 5-feet minimum clearance to furniture or other objects placed directly in front of the heater.

SELECTION CHART

CATALOG NUMBER	VOLTS	WATTS	BUILT-IN THERMO	AMPS.
QFG1512IFM	120	375/750/1125/1500	No	3.1/6.3/9.4/12.5
QFG2024IFM	240	500/1000/1500/2000	No	2.1/4.2/6.3/8.3
QFG2224IFM	240	563/1125/1688/2250	No	23./4.7/7.0/9.4
QFG2228IF	208	2200	No	10.6
QFG1512T2M	120	275/750/1125/1500	Yes	3.1/6.3/9.4/12.5
QFG2024T2M	240	500/1000/1500/2000	Yes	2.1/4.2/6.3/8.3
QFG2224T2M	240	563/1125/1688/2250	Yes	2.3/4.7/7.0/9.4

ACCESSORIES

CATALOG NO.	DESCRIPTION
GFRBB	Back Box
GFRBB6	Back Box Multi-Pack
QFGTSP	Single Pole Thermostat
QFGTDP	Double Pole Thermostat
GFRSM	Surface Mounting Frame

ARCHITECT'S AND ENGINEER SPECIFICATIONS*

The heating equipment shall include a QFG Series fan forced air heater suitable for small area heating, as manufactured by Berko, A Marley Engineered Products Brand, Bennettsville, SC. Heaters shall be UL and cUL listed.

The heater shall be designed for surface or recessed wall mounting in the horizontal position. For surface mounting a GFRSM surface mounting box shall be used.

BACK BOX: The back box shall be designed for duty as a recessed rough-in box in either masonry or frame construction. The back box shall be heavy gauge galvanized steel and shall contain knock outs through which field wiring leads enter the box. A ground wire pigtail lead shall be attached to the back box. Detachable back box mounting feet shall be used to insure proper installation.

INNER FRAME ASSEMBLY: The inner frame assembly shall consist of a heavy gauge galvanized steel chassis on which are mounted the heating element, protected motor and tangential blower; and over temperature protector. The inner frame assemble shall be completely prewired with pigtail leads for field wiring. The inner frame assembly shall lock into the back box without fasteners.

HEATING ELEMENT: The heating element shall be a fast response open coil type for quick warm up and low maintenance. The element shall cover the discharge area to ensure uniform heating of all discharge air.

MOTOR AND CONTROLS: The fan motor shall be impedance protected and permanently lubricated. Thermal cutout shall be bi-metallic, snap-action type designed to shut off heat in the event of overheating. A pilot light that will illuminate if the over temperature protector trips shall be provided. The element shall contain a "one shot" thermal protector that acts as a back-up protector.

FRONT COVER: The louvered front cover shall be of heavy gauge steel. It shall attach to the back box with two screws.

SURFACE MOUNTING FRAME: The surface mounting frame shall be of heavy gauge steel designed to mount around the back box for a finished surface installation. Slot knock outs shall be provided for power supply conduit.

FINISH: All sheet metal parts are galvanized steel except the front cover which shall be electro-static polyester powder paint coated.

**Berko reserves the right to change specifications without prior notice.*