BERKO®
A Marley Engineered Products Brand
470 Beauty Spot Rd. E
Bennettsville, SC 29512

SUBMITTAL SHEET
QFF SERIES
CEILING-MOUNTED FAN-FORCED HEATER

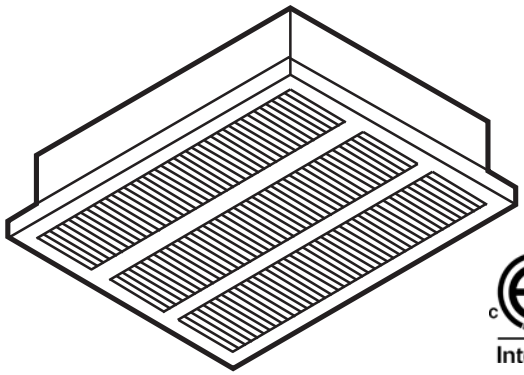

Intertek

CAPACITIES
1500–4800 Watts 120V, 208V, 240V, 277V, 347V, 480V, 600V Thermostat Range: 40°–90°F Air Movement: 150 CFM Note: 480 volts heaters are 3-phase only.

See Selection Chart for all Options

JOB NAME: _____

LOCATION: _____

ARCHITECT: _____

ENGINEER: _____

CONTRACTOR: _____

SUBMITTED BY: _____ DATE: _____

TAG/ITEM	QTY.	CATALOG NUMBER	HEATER			AMPS	WEIGHT
			KW	VOLTS	Ø		

ACCESSORIES AND CONTROLS	TAG/ITEM	QTY.	CATALOG NUMBER	DESCRIPTION

SUBMITTED BY:	DATE

APPROVED BY:	DATE

QFF SERIES

ARCHITECT'S AND ENGINEER'S SPECIFICATIONS*

The heating equipment shall include a ceiling mounted EFF electric automatic fan-forced heater suitable for large area heating as manufactured by Berko®, A Marley Engineered Products® Brand, Bennettsville, SC. The heater shall be designed for ceiling surface, recess or T-Bar mounting. Heaters shall be cETLus Listed.

HEATER ASSEMBLY: The heater assembly, which fits in the back box, shall consist of a fan panel upon which is mounted all of the operational parts of the heater.

HEATING ELEMENT: The heating element shall be of the non-glowing design consisting of 80/20 NiCh resistance wire enclosed in a steel sheath to which plate fins are copper brazed. It shall be warrantied for 5 years.

FAN AND FAN MOTOR: The fan shall be five-bladed aluminum. The fan motor shall be totally enclosed.

FAN DELAY SWITCH: Fan control shall be of bi-metallic, snap-action type and shall activate fan after heating element reaches operating temperature. The fan shall continue to operate after the thermostat is satisfied and until the heating element is cool.

THERMAL CUTOUT: A thermal cutout shall be built into the system to shut off the heater in the event of overheating.

DISCONNECT SWITCH: A double-pole single throw disconnect switch shall be mounted on the back box for positive disconnect of power supply. It will be completely concealed behind the faceplate.

BACK BOX: The back box shall be designed for duty as a recessed rough-in box either masonry or frame installations, and is also used with the surface mounting frame in surface mounting installations. The back box shall be 20- gauge galvanized steel and shall contain knockouts through which power leads are brought.

FACEPLATE: The louvered faceplate shall be of 14-gauge cold-rolled steel, phosphatized, then electrostatically painted Beige by a powder coat process. A ¼-inch mesh screen shall be installed beneath the faceplate to deter the insertion of foreign objects. The face plate shall be secured to the heating unit with tamper-resistant screws.

THREE-PIECE DESIGN: The heater shall be made up of a back box, a heater assembly and a faceplate.

OPTIONS:

THERMOSTAT: The optional tamper-resistant thermostat shall be of the bi-metallic, snap-action type with enclosed contacts. It shall be completely concealed behind the faceplate to become tamper-resistant (EFFT1 or EFFT2).

LOW VOLTAGE TIME DELAY RELAYS: 24 volt and 120 volt low voltage time delay relays are available as optional equipment to control 208, 240 or 277 volt heaters (with an external supplied 24 or 120 volt control circuit) in conjunction with central energy control systems. The built-in thermostat can then be used as one of the thermostats in an automatic night set back operation (EFFR2 or EFFR12).

LOW VOLTAGE TRANSFORMER/RELAYS: (Primary or Secondary) Transformer/Relays shall be available as optional equipment to control 208, 240 or 277 volt heaters (with single point supply connection and internal supplied 24 volt control circuit) in conjunction with central energy control systems. The built-in thermostat can then be used as one of the thermostats in an automatic night set back operation (EFFTR4 OR EFFTR7).

SURFACE MOUNTING FRAME: The surface mounting frame, designed to allow full surface mounting, shall be of 14 gauge cold-rolled steel, phosphatized, then electrostatically painted by a powder coat process (EFFSM).

T-BAR FRAME: For T-Bar mounting, a 14-gauge cold-rolled steel frame, phosphatized and electrostatically painted by a powder coat process, shall be available. Frame shall be designed to mount in a standard 2′ x 2′ ceiling grid (EFFTBF).

**Berko reserves the right to change specifications without prior notice.*

Approvals: _____ _____ _____

Models & Specifications:

		ELECTRICAL DATA					
CATALOG NO.	UPC	VOLTS	PHASE	WATTS	AMPS	BTU/HR	SHIP WT.
QFF1500	685360148106	120	1	1500	12.5	5120	23 lbs
QFF3007	685360059075	277	1	3000/1500	10.8/5.4	10239/5120	23 lbs
QFF4008	685360059136	208	1	4000/2000	19.2/9.8	13652/6826	23 lbs
QFF4004	685360059099	240	1	4000/2000	16.7/14.4	13652/10239	23 lbs
		208	1	3000/1500		10239/5120	
QFF4007	685360059129	277	1	4000/2000	14.4/12.5	13652/10239	23 lbs
		240	1	3000/1500		10239/5120	
QFF4804	685360059167	240/208	1	4800/3600	20.0/17.3	16382/12287	23 lbs
QFF4807	685360059198	277/240	1	4800/3600	17.3/15.0	16382/12287	23 lbs
QFF48483	685360155845	480	3	4800	5.8	16382	23 lbs
QFF48483LV	685360155869	480	3	4800	5.8	16382	23 lbs

NOTE: Factory-wired for highest wattage, field-convertible to lower wattages. Orders above 7500' sea level require special order

Optional Accessories:

CATALOG NO.	UPC	DESCRIPTION	COLOR	SHIP WT.
QFFSM	685360058955	Surface Mounting Sleeve	Beige	6 lbs
QFFR2 (24V)	685360058948	Time delay relay, 45–60 seconds to close when energized; Uses remote 24V or 120V power source	—	1 lbs
QFFR12 (120V)	685360058931			
QFFTBF	685360058962	T-Bar Frame Kit	—	4.5 lbs
QFFT1	685360058993	Single Pole T-Stat. (Field Installed)	—	1 lbs
QFFTR4	685360058979	208/240V Primary Transformer 24V Relay	—	1 lbs
QFFTR7	685360058986	277V Primary 24V Sec. Transformer Relay	—	1 lbs

Dimensions and Clearances:

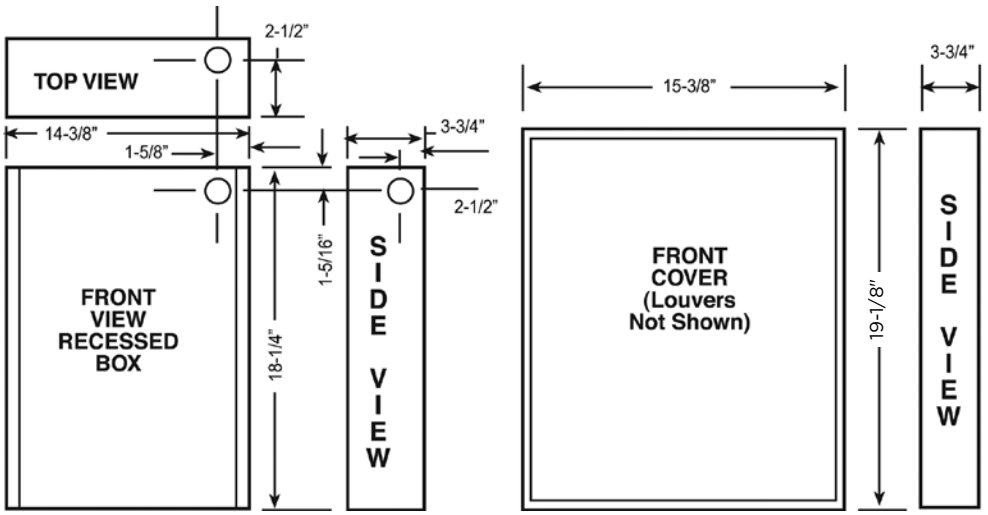

No matter the industry or application, Marley Engineered Products has a robust portfolio of innovative, reliable, high-performance comfort heating and ventilation solutions for all your heating needs.

For more information or assistance on your next project, contact Technical Services at 800-642-4328

Scan the QR code to access additional specs and features

Approvals: _____ _____ _____