Marley Industrial Products

PROJECT	ENGINEER	SUBMITTED BY
DATE	ARCHITECT	NOTES:
SHEET OF	CONTRACTOR	NOTES:

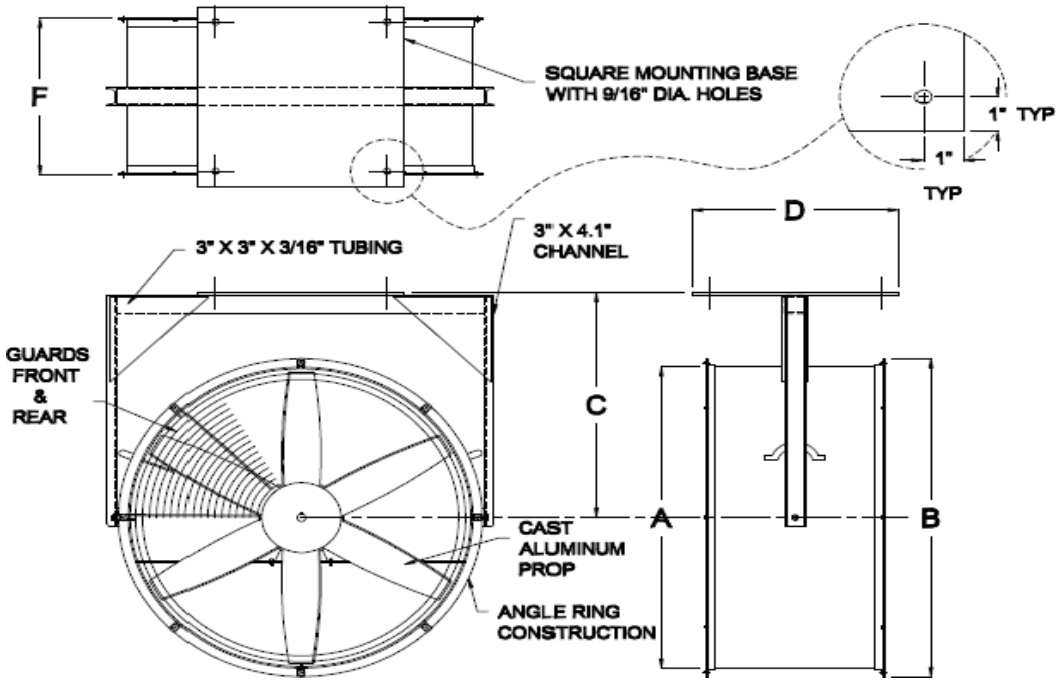

Specifications:

18" to 36" sizes available with 115/230V, 1PH or 230/460V, 3PH direct drive totally enclosed or explosion motors.

Non-sparking cast aluminum blades for explosion proof applications.

Rugged, heavy duty 14 gauge steel body with steel tubing yoke mount. Industrial grey enamel coating.

Mount to overhead beams or wall columns. One way swivel.

Front and rear guards meet Federal OSHA standards.

One year limited warranty.

Note: When ordering Explosion Proof model add EXP suffix to to model number.

SIZE	A	B	C	D	E
18"	18"	20"	20"	15"	20"
24"	24"	26"	21-1/2"	15"	20"
30"	30"	32"	25-1/2"	15"	20"
36"	36"	38"	29-1/2"	18"	24"

ITEM	QTY.	MARK	MODEL NUMBER	FAN SIZE	OVER ALL HEIGHT	MOTOR HP	VOLTS	PHASE	MOTOR TYPE TE / EXP	RPM	CFM @ 0" SP	APPROX. WEIGHT

PERMANENT MOUNT BLOWER ONE WAY SWIVEL SUBMITTAL SHEET