Marley Industrial Products

PROJECT	**ENGINEER**	**SUBMITTED BY**
DATE	**ARCHITECT**	**NOTES:**
SHEET **OF**	**CONTRACTOR**	**NOTES:**

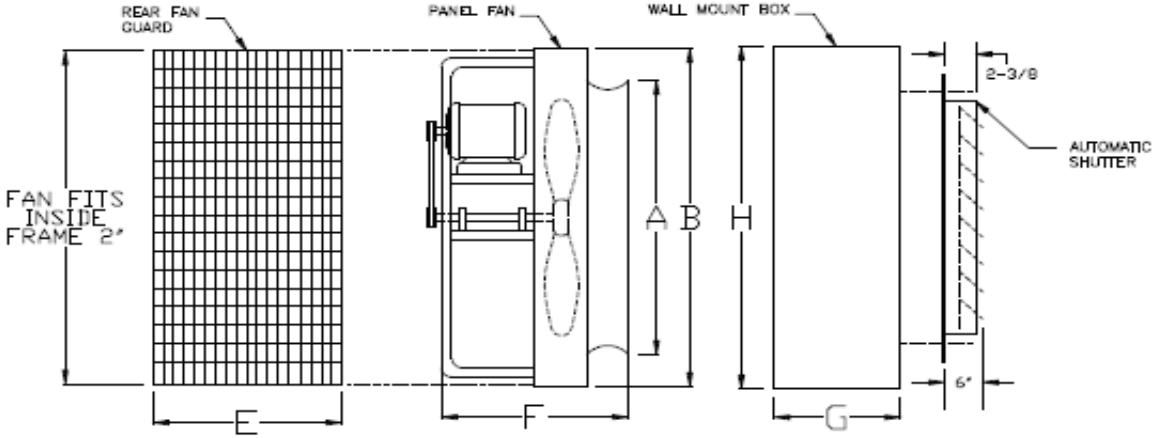

Specifications:

Package wall kits can be added to any PEF, WEB or WED Series wall mount fan, direct or belt drive.

Package fan includes:

- -Rear box guard
- -Wall mounting box
- -Exhaust or intake shutter

Wall packages and fan units are fully assembled together and ready for installation.

When specifying Exhaust Package, add suffix "PKGE" to fan model number. When specifying Intake Package, add suffix "PKGI" to fan model number.

Price of Wall Package is in addition to base fan price.

A - FAN SIZE	B	E	* F	G	H	WALL OPENING SQ.	SHUTTER SIZE
24"	30"	24"	20"	14"	30-1/4"	30-3/4"	24"
30"	36"	24"	20"	14"	36-1/4"	36-3/4"	30"
36"	42"	24"	22"	15"	42-1/4"	42-3/4"	36"
42"	48"	24"	24"	16"	48-1/4"	48-3/4"	42"
48"	54"	24"	25"	16"	54-1/4"	54-3/4"	48"
54"	60"	24"	26"	18"	60-1/4"	60-3/4"	54"
60"	66"	26-1/2"	28"	18"	66-1/4"	66-3/4"	60"

Note: All units are made to order and are not retrunable.

*Shown with WEB series fan for reference.

ITEM	QTY.	MARK	BASE FAN MODEL NUMBER	FAN SIZE	PACKAGE TYPE EXHAUST / INTAKE	MOTOR HP	VOLTS / PHASE	MOTOR TYPE ODP / TE / EXP	RPM	CFM @ 0" SP	APPROX. WEIGHT

WALL EXHAUST / INTAKE PACKAGE *SUBMITTAL SHEET*

Marley
Industrial Products

PROJECT	ENGINEER	SUBMITTED BY
DATE	ARCHITECT	NOTES:
SHEET OF	CONTRACTOR	NOTES:

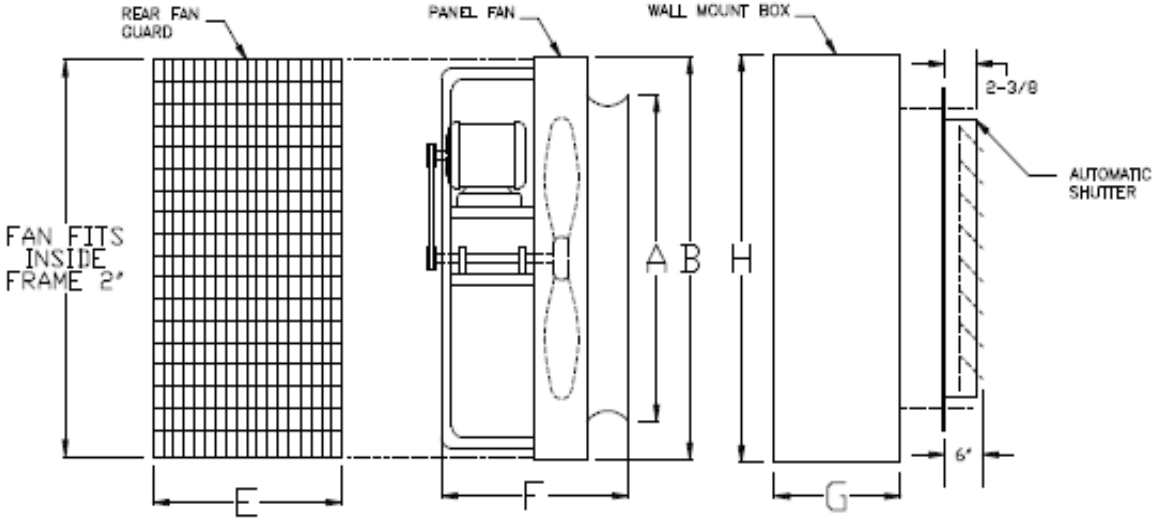

Specifications:
Package wall kits can be added to any PEF, WEB or WED Series wall mount fan, direct or belt drive.

Package fan includes:
- -Rear box guard
- -Wall mounting box
- -Exhaust or intake shutter

Wall packages and fan units are fully assembled together and ready for installation.

When specifying Exhaust Package, add suffix "PKGE" to fan model number. When specifying Intake Package, add suffix "PKGI" to fan model number.

Price of Wall Package is in addition to base fan price.

A - FAN SIZE	B	E	* F	G	H	WALL OPENING SQ.	SHUTTER SIZE
12"	16"	12"	11"	8"	16-1/4"	16-3/4"	12"
16"	20"	16"	11"	8"	20"	20-3/4"	16"
18"	24"	18"	13"	8"	24"	24-3/4"	18"
20"	24"	20"	13"	8"	24"	24-3/4"	20"

Note: All units are made to order and are not retrunable.

*Shown with WED series fan for reference.

ITEM	QTY.	MARK	BASE FAN MODEL NUMBER	FAN SIZE	PACKAGE TYPE EXHAUST / INTAKE	MOTOR HP	VOLTS / PHASE	MOTOR TYPE ODP / TE / EXP	RPM	CFM @ 0" SP	APPROX. WEIGHT

WALL EXHAUST / INTAKE PACKAGE *SUBMITTAL SHEET*