PH5HWAC SERIES
Unit Heater





Technical Specifications:

Temp Range: 40°–90°F
CFM: 210

Ideal Spaces:

Factories
Garages
Schools
Shipping Docks
Warehouses

Bronze

- Air flow can be directed vertically, horizontally or any position in between
- Mounts either on wall or ceiling for primary or spot heating (bracket included)
- Built-in bi-metal thermostat; multiple wattage heat selector switch for precise amount of heat
- Fan-only switch for air movement when no heat is required
- Specially designed venturi outlet to meet required additional air throw in vertical position
- Advanced pull-through air flow design draws air across heating element for even air distribution and cooler element operation
- Heavy gauge die-formed steel housing and completely enclosed fan motor
- Aluminum-finned, copper-clad steel sheath heating element extends life due to cooler sheath temperature and faster heat dissipation
- High temperature manual thermal cut-off with audible alarm for added safety
- Manual reset thermal cut-off button located on front for easy access

c UL us

5 YEAR WARRANTY ELEMENT

1 YEAR WARRANTY WORKMANSHIP

PH5HWAC SERIES
Unit Heater

Scan the QR code to access additional specs and features

Models & Specifications:

ITEM INFORMATION			ELECTRICAL DATA				
	CATALOG NO.	UPC	VOLTS	WATTS	BTU/HR.	AMPS	SHIP WT.
◆	PH5HWAC	685360150710	240	5000/3333	17060/11372	21.0/14.0	28 lbs
			208	3750/2500	12795/8530	18.0/12.0	

SKU Legend: ◆ **= Popular Products** ● **= Extended Offering** (Contact your local Marley Sales Representative for typically associated lead times)

Optional Accessories:

CATALOG NO.	UPC	DESCRIPTION
PHCS1B	685360150703	Cord & Plug Assembly (Optional)

Dimensions and Clearances:

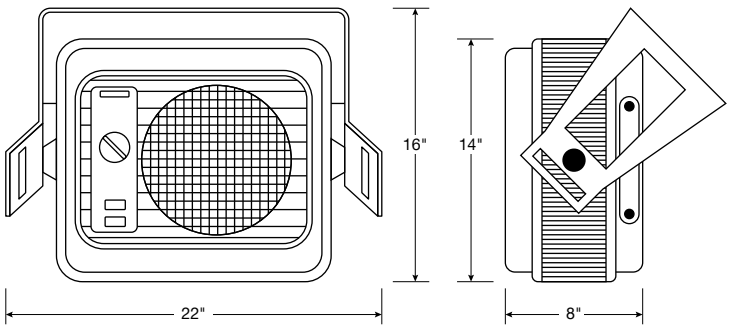

Special Combination Stand & Swivel Bracket:

Enables unit to be positioned in a variety of ways. Especially easy to install on ceilings or walls, the bracket is already predrilled with 16" O.C. mounting holes.

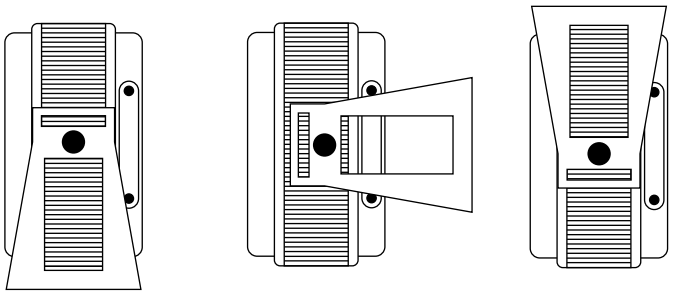

FLOOR WALL CEILING