Marley
Engineered Products

Q Series Commercial Fan Forced Wall Heaters

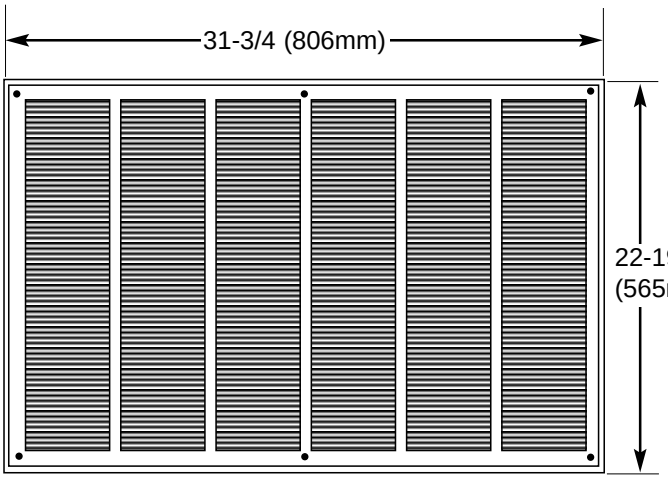

Back box dimensions 30-3/8 (771mm) wide x 21-1/4 (540mm) high x 3-3/4 (95mm) deep.

c UL us

Installation & Maintenance Instructions

Dear Owner,

Congratulations! Thank you for purchasing this new heater manufactured by Marley Engineered Products. You have made a wise investment selecting the highest quality product in the heating industry. Please carefully read the installation and maintenance instructions shown in this manual. You should enjoy years of efficient heating comfort with this product from Marley Engineered Products... the industry's leader in design, manufacturing, quality and service.

... The Employees of
Marley Engineered Products

⚠ WARNING ↯

Read Carefully - These instructions are written to help you prevent difficulties that might arise during installation of heaters. Studying the instructions first may save you considerable time and money later. Observe the following procedures and cut your installation time to a minimum.

TO REDUCE RISK OF FIRE AND ELECTRIC SHOCK:

1. To prevent electrical shock, disconnect all power coming to heater at main service panel before wiring or servicing.
2. All wiring must be in accordance with the National and Local Electrical Codes and the heater must be grounded as a precaution against possible electric shock.
3. Verify the power supply voltage coming to heater matches the ratings printed on the heater nameplate before energizing.
4. This heater is hot when in use. To avoid burns, do not let bare skin touch hot surfaces.
5. Do not insert or allow foreign objects to enter any ventilation or exhaust opening as this may cause an electric shock, fire, or damage to the heater.
6. To prevent a possible fire, do not block air intakes or exhaust in any manner. Keep combustible materials, such as crates, drapes, etc., away from heater. Do not install behind doors, furniture, towels, or boxes. Do not install in ceiling.
7. A heater has hot and arcing (sparking) parts inside. Do not use it in areas where gasoline, paint, or flammable liquids are used or stored.
8. Use this heater only as described in this manual. Any other use not recommended by the manufacturer may cause fire, electric shock, or injury to persons.
9. This heater is not approved for use in hazardous or corrosive atmospheres, such as marine, green house, or chemical storage areas.

SAVE THESE INSTRUCTIONS

IMPORTANT

WARNING

DO NOT INSTALL HEATER UPSIDE DOWN OR SIDEWAYS.
DO NOT USE HEATER WITHOUT GRILLE.

CAUTION

FOR WALL MOUNTING ONLY. **DO NOT** INSTALL HEATER CLOSER THAN 8" (203 mm) TO THE FLOOR OR ANY ADJACENT WALL SURFACE. **DO NOT** INSTALL CLOSER THAN 36" (915 mm) TO THE CEILING.

Installation of Recessed Back Box in New Construction

1. Mounting Back Box (See Figure 1).
   NOTE: Heater fan panels are installed into back box at factory. These must be removed during the installation of back box.

a. Place the back box between two 32" (812 mm) center-to-center wall studs at the desired mounting height but no closer than 8" (203 mm) to adjacent wall or floor.
   b. Align back box such that the bottom and sides will be flush with finished wall surface.
   c. Secure the back box in position with wood screws or nails as shown in Figure 1.

2. Power Supply Wiring (See Figure 2)

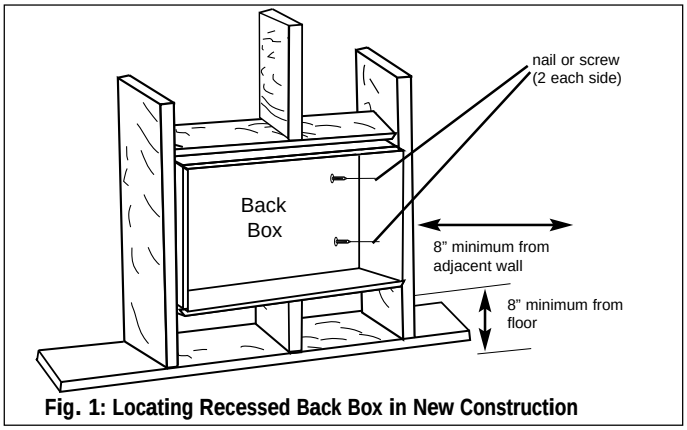

Fig. 1: Locating Recessed Back Box in New Construction

NOTE: Wire compartment volume - 260in³ (4260cm³).

a. Run a power supply cable into the knockout area in the upper right hand corner of the back box. All wiring must be in accordance with National and Local Electrical Codes. Refer to Table 1 for correct wire size.
   b. Remove disconnect switch bracket by removing two screws on the left side of the disconnect switch cover.
   c. Install a cable clamp in the "knockout" in the upper right corner of the back box.
   d. Insert power supply cable through cable clamp, allowing at least 6" (152mm) of leads to extend inside the back box. Connect the blue lead wires of disconnect switch to the supply wire leads using wire connectors (see wiring diagram, pg. 3.)
   e. Ground the back box by connecting the supply ground lead wire to the marked ground lug located in the upper right corner of the back box.
   f. Secure disconnect switch cover in place.

Installation of Recessed Back box in Existing Construction

1. Provide a wall opening 30-1/2" (774mm) wide by 21-1/8" (536mm) high at the desired mounting height, but no closer than 8" (203mm) to floor or adjacent wall. (See Figure 2.)
2. Power Supply Wiring

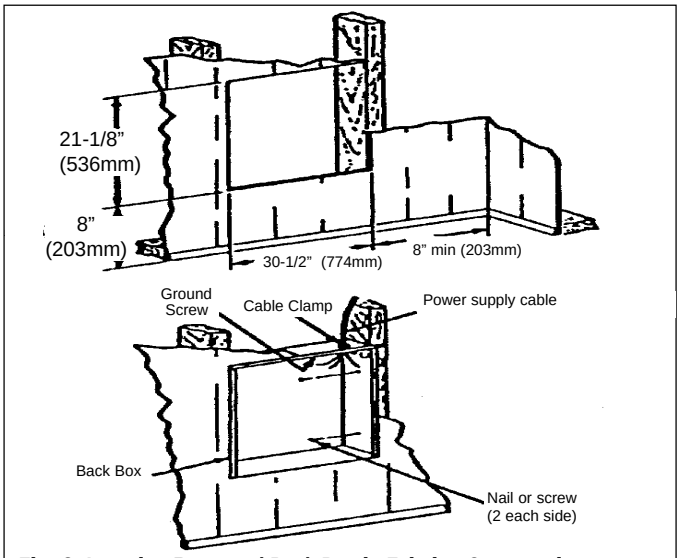

Fig. 2: Locating Recessed Back Box in Existing Construction

NOTE: Wiring Compartment Volume - 260in³ (4260cm³).

a. Run a power supply cable into the area above the top of the wall opening. All wiring must be in accordance with National and Local Electrical Codes. Refer to Table 1 for correct wire size.
   b. Remove disconnect switch bracket by removing the two screws on the left side of disconnect switch cover.
   c. Install a cable clamp in the "knockout" in the top right corner of back box.
   d. Insert power supply cable through cable clamp, allowing approximately 6" (152mm) of cable length to remain inside the back box to facilitate connections.

3. Mounting Back Box
   a. Place the back box into wall opening flush with finished wall surface on bottom and sides of box.
   b. Secure the back box in place with wood screws or nails. (see Fig. 2)
4. Wiring Disconnect Switch
   a. Connect the power supply wires to the blue wires of the disconnect switch using wire connectors (see wiring diagram, pg. 3)
   b. Ground the back box connecting the supply ground lead wire to the marked ground lug located in the upper right corner of the back box.
   c. Secure disconnect switch cover in place.

Table 1

Catalog #	Volts	Phase	Watts	Amps	Minimum Supply Wire Size
Q6008	208	1	6,000	28.8	10 AWG
Q6004	240			25.0	
Q6007	277			21.7	
Q6003	347			17.3	12 AWG
Q60048	480			12.5	14 AWG
Q6006	600			10.0	
Q8008	208	1	8,000	38.5	8 AWG
Q8004	240			33.3	
Q8007	277			28.9	10 AWG
Q8003	347			23.1	
Q80048	480			16.7	12 AWG
Q8006	600			13.3	12 AWG

Installation of Back box with Surface-Mounting Frame (See Figure 3)

1. Secure back box to wall with knockouts in upper right hand corner using screws and anchors.

NOTE: If heater is located in a high traffic area, where it may be subjected to vandalism or abuse, take extreme care to see that the box is firmly attached to the wall.

2. Power Supply Wiring
   Notes:
   • Wiring compartment volume: 260in³ (4226cm³).

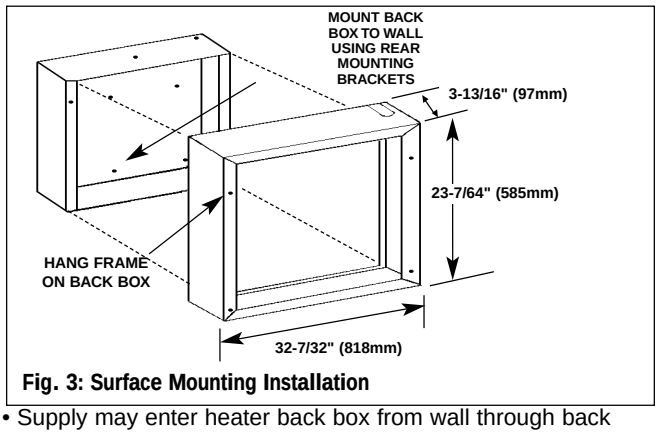

Fig. 3: Surface Mounting Installation

• Supply may enter heater back box from wall through back knockout or through top knockout when surface type conduit is provided. When surface conduit system is used, the "U" shaped knockout in the surface frame must be removed to allow clearance over conduit.

a. Remove the disconnect switch bracket from back box by removing the two screws.

b. Remove desired knockout in rear or top of back box and run supply cable to heater location and into upper right corner of back box, leaving at least 6" of wire inside box for connection. Cable arrangement must be in accordance with the National and Local Electric Codes and cable must be properly protected by use of appropriate cable clamp or conduit fittings.

c. Referring to the appropriate wiring diagram make the following connections:
   1. Connect the supply ground conductor to the back box by attaching to the grounding lug marked "Ground."
   2. Connect each supply power lead wire to one of the blue lead wires from the disconnect switch using wire nuts or approved wire connectors.
   3. If black leads from disconnect switch are not already attached to terminal block attach as shown in the wiring diagram. Check to make sure connections are tight.
   4. Secure disconnect switch and bracket to back box with the screws removed earlier.

3. Carefully fit surface frame over back box making sure back edges of frame are flush with finished wall. See fig. 3. Secure frame in place with two screws as shown.

Installation of Heater Assembly and Grille

After back box is completely installed and no further construction dirt is expected, clean debris from back box. Heater fan panels were shipped mounted to back box and were removed to mount back box.

1. Insert the heater assemblies (fan panels) into back box, placing the four mounting holes (with key-hole slots) over the screws in the back box. Tighten all screws securely.
2. If surface-mounting frame is used, ensure that the frame is even with all four heater assembly tabs before tightening screws.
3. Connect the two disconnected black switch wires to the heater terminal block (see wiring diagram). Connect red, blue and black wires from both fan panels to heater terminal block (see wiring diagram). Check that all wiring connections are tight.
4. Turn thermostat(s) to the extreme counterclockwise position.
5. Turn disconnect switch "ON".
6. Mount the grille using the six (6) long screws provided. The screws thread into holes located in the flanges of the back box.

Operation

NOTE: The operation instructions apply to 208, 240 and 277V heaters with one thermostat. Units operating at 347V, 480V and 600V have **two** thermostats.

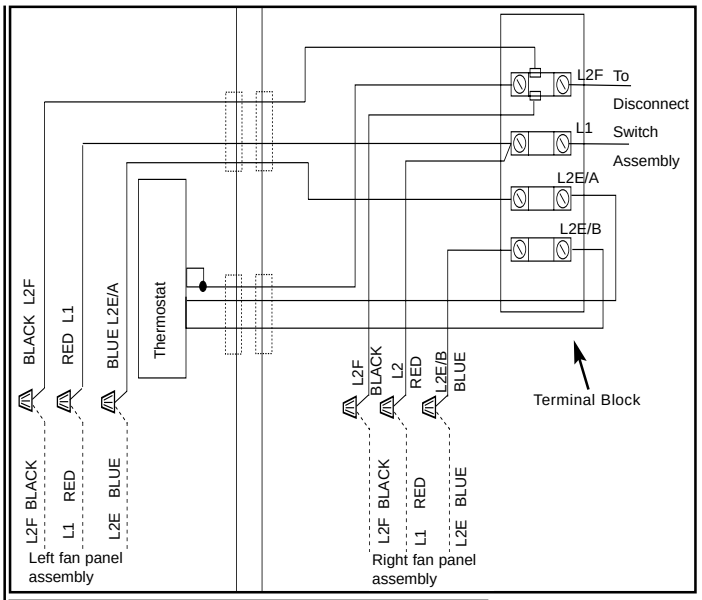

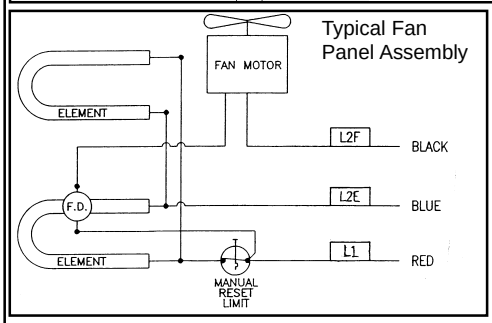

Wiring diagram for fan panels used on 208V, 240V, 277V Q Series

Q6008
Q6004
Q6007
Q8008
Q8004
Q6007

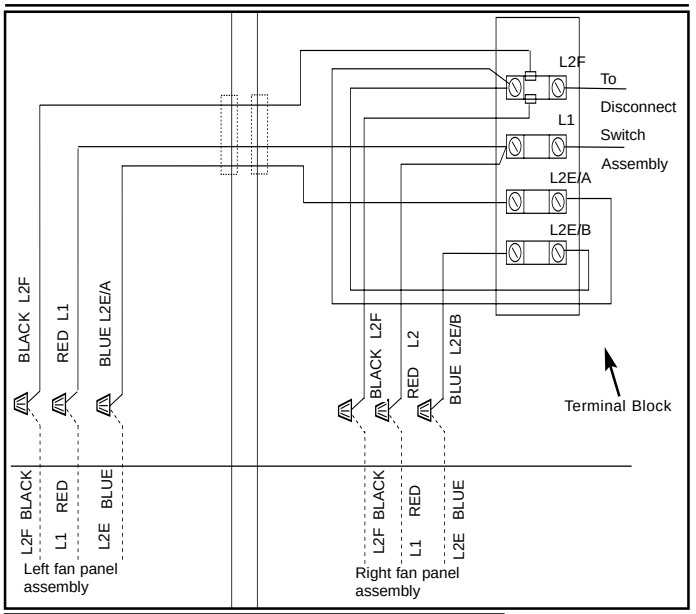

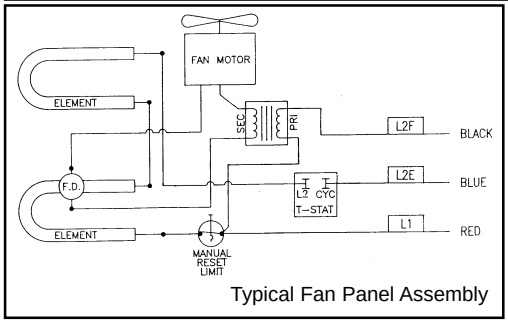

Wiring diagram for fan panels used on 347V, 480V, 600V Q Series

Q6003
Q60048
Q6006
Q8003
Q80048
Q8006

1. Rotate the thermostat(s) fully clockwise. This should energize the heating elements and, after a short delay, engage the fan causing warm air to flow from the hot air discharge at the openings in the bottom of the grille.
2. After the operation check, rotate the thermostat(s) by inserting a small screw driver through the grille to the desired position to obtain room comfort. For units with two thermostats, it is recommended that both should be set at approximately the same setting.

NOTE: For best results, the heater should be left "ON" constantly during the heating season because the thermostat, when properly set, will maintain the desired temperature.

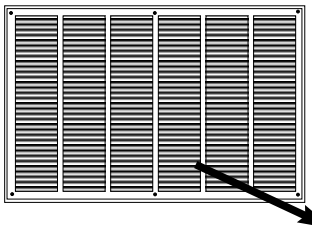

NAMEPLATE

MODEL NO. **Q6004** DATE CODE: **0996**
FAN FORCED WALL HEATER
APPAREIL DE CHAUFFAGE MURAL À AIR PULSÉ

240 VOLTS AC 60HZ 6000 WATTS 1 PHASE
USE ONLY WITH TWO FAN PANELS
MODEL FP3004
A N'UTILISER QU'AVEC LE TABLEAU À DEUX VENTILATEURS MODÈLE FP3004

DO NOT OPERATE WITHOUT FRONT COVER IN PLACE
NE PAS UTILISER SI LE COUVERCLE AVANT N'EST PAS EN PLACE

774G LISTED ROOM HEATER

MARLEY ENGINEERED PRODUCTS
BENNETTSVILLE, SC 29512

4104-2171-001

TO RESET MANUAL RESET LIMITS

Your heater is equipped with two manual reset safety thermal limit controls that will automatically turn the heater off to prevent a fire if the heater overheats. These controls are located on the fan panel assemblies between the elements and fan blades and marked "reset". The red reset buttons can be seen through the front grille when the heater is installed. To reset, allow the heater to cool, then push the red buttons that are visible through the hole in the fan panels. The heater should immediately return to normal operation. *Determine why manual reset tripped!* (See Caution note)

CAUTION

OPERATION OF THE MANUAL RESET SAFETY THERMAL LIMIT CONTROL IS AN INDICATION THAT THE HEATER HAS BEEN SUBJECTED TO SOME ABNORMAL CONDITION. IT IS RECOMMENDED THAT THE HEATER BE CHECKED BY A REPUTABLE ELECTRICIAN OR REPAIR SERVICE TO ENSURE THE HEATER HAS NOT BEEN DAMAGED.

Maintenance

Once each year the heater should be cleaned to remove dust and other foreign material which has collected during the heating season. This is a simple operation when performed as follows:

1. Turn off the electric power at main line switch (or remove all fuses) to disconnect electric power from the heater. THIS IS IMPORTANT.
2. Remove the grille and turn the disconnect switch to the OFF position.

IMPORTANT

MORE THAN ONE DISCONNECT MAY BE NECESSARY IF RELAY ACCESSORY IS USED.

CAUTION

DO NOT USE WATER OR DAMP CLOTH FOR CLEANING AND **DO NOT** DISTURB THE HEATING ELEMENT**.**

3. With a vacuum cleaner nozzle or dust cloth, remove dust and other foreign material.
4. After cleaning, turn disconnect switch to ON position and reinstall the grille.
5. Turn on the main line switch (or replace fuses) to restore power to the heater. The heater is now ready for another season of operation.

LIMITED WARRANTY

All products manufactured by Marley Engineered Products are warranted against defects in workmanship and materials for one year from date of installation, except heating elements which are warranted against defects in workmanship and materials for five years from date of installation. This warranty does not apply to damage from accident, misuse, or alteration; nor where the connected voltage is more than 5% above the nameplate voltage; nor to equipment improperly installed or wired or maintained in violation of the product's installation instructions. All claims for warranty work must be accompanied by proof of the date of installation.

The customer shall be responsible for all costs incurred in the removal or reinstallation of products, including labor costs, and shipping costs incurred to return products to Marley Engineered Products Service Center. Within the limitations of this warranty, inoperative units should be returned to the nearest Marley authorized service center or the Marley Engineered Products Center, and we will repair or replace, at our option, at no charge to you with return freight paid by Marley. It is agreed that such repair or replacement is the exclusive remedy available from Marley Engineered Products.

THE ABOVE WARRANTIES ARE IN LIEU OF ALL OTHER WARRANTIES EXPRESSED OR IMPLIED. AND ALL IMPLIED WARRANTIES OF MERCHANTABILITY AND FITNESS FOR A PARTICULAR PURPOSE WHICH EXCEED THE AFORESAID EXPRESSED WARRANTIES ARE HEREBY DISCLAIMED AND EXCLUDED FROM THIS AGREEMENT. MARLEY ENGINEERED PRODUCTS SHALL NOT BE LIABLE FOR CONSEQUENTIAL DAMAGES ARISING WITH RESPECT TO THE PRODUCT, WHETHER BASED UPON NEGLIGENCE, TORT, STRICT LIABILITY, OR CONTRACT.

Some states do not allow the exclusion or limitation of incidental or consequential damages, so the above exclusion or limitation may not apply to you. This warranty gives you specific legal rights, and you may also have other rights which vary from state to state.

For the address of your nearest authorized service center, contact Marley Engineered Products in Bennettsville, SC, at 1-800-642-4328. Merchandise returned to the factory must be accompanied by a return authorization and service identification tag, both available from Marley Engineered Products. When requesting return authorization, include all catalog numbers shown on the products.

HOW TO ORDER REPAIR PARTS

In order to obtain any needed repair or replacement parts, warranty service or technical information, please contact Marley Engineered Products Service Center toll-free by calling 1-800-642-HEAT.

When ordering repair parts, always give the information listed as follows:

1. The Part Number
2. The Model Number
3. The Part Description
4. Date of Manufacture

Part No. 5200-2288-001

ECR 33603

8/97

Marley Engineered Products

470 Beauty Spot Rd. East
Bennettsville, SC 29512 USA