BERKO®

A Marley Engineered Products Brand

470 Beauty Spot Rd. E, Bennettsville, SC 29512

SUBMITTAL SHEET
Mechanical Artisan™
Heavy-Duty Architectural Wall Heater
MCSSARWH SERIES

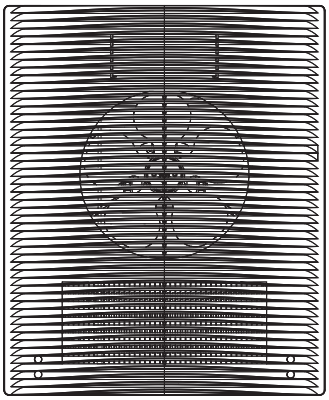

CAPACITIES
1800 - 4800 Watts 120V, 208V, 240V, and 277V @ 1Ø

Thermostat Range: 40 - 99 Degrees F Air Movement: 100 CFM

JOB NAME: _____

LOCATION: _____

ARCHITECT: _____

ENGINEER: _____

CONTRACTOR: _____

SUBMITTED BY: _____

DATE: _____

ITEM	QTY.	CATALOG NUMBER	TAG	WATTS	VOLTS	AMPS	BUILT-IN CONTROLS

ACCESSORIES AND CONTROLS

ITEM	QTY.	CATALOG NUMBER	TAG	DESCRIPTION

SUBMITTED BY:	DATE

APPROVED BY:	DATE

MCSSARWH SERIES - **HEAVY-DUTY ARCHITECTURAL WALL HEATERS**

MCSSARWH SERIES

BERKO®
A Marley Engineered Products Brand

470 Beauty Spot Rd. E, Bennettsville, SC 29512

SELECTION CHART

CATALOG NUMBER	VOLTS	WATTS*	AMPS	BTU/HR
MCSSARWH1802	120	1800 / 900	15.0 / 7.5	6,142 / 3070
MCSSARWH4808	208	4000 / 2000	19.2 / 9.6	13, 648 / 6824
MCSSARWH4804	240	4800 / 2400	20.0 / 10.0	16,378 / 8189
MCSSARWH4807	277	4800 / 2400	17.3 / 8.7	16,378 / 8189

Note: Standard grille color is White
Add AL (Aluminum) suffix to catalog number.
Example: MCSSARWH4808AL
Allow two weeks delivery for models with special color.
See Color Selection Chart for custom colors.
** Heaters shipped at higher wattage. Units can be converted to half-wattage during installation.*

SELECTION CHART

CATALOG NUMBER	DESCRIPTION
HTWHSM	Surface Mounting Frame 16-1/4" W x 19-3/8" H x 3-7/8" D
HTWHS1	1" Semi-Recess Mounting Frame 16-1/4" W x 19-3/8 " H x 1" D
HTWHS2	2" Semi-Recess Mounting Frame 16-1/4" W x 19-3/8" H x 2" D
MCAR2	24V Time-delay relay rated 30A @ 120 - 277V
MCAR12	120V Time-delay relay rated 30A @ 120 - 277V

Note: Standard grille color is White
Add AL (Aluminum) suffix to catalog number.
Example: MCSSARWH4808AL
Allow two weeks delivery for models with special color.
See Color Selection Chart for custom colors.

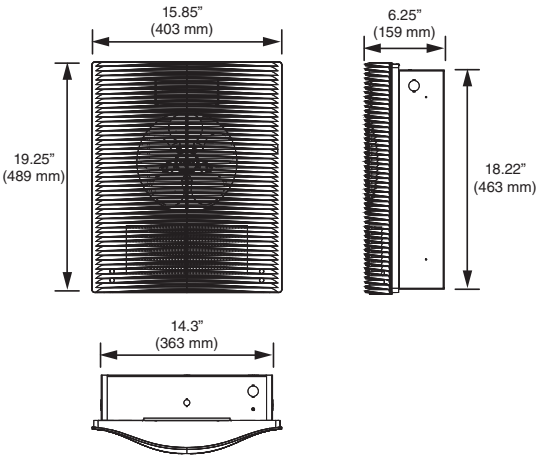

MOUNTING LIMITATIONS

Do not install heater closer than 12 inches to the floor, 12 inches to an adjacent wall, 36 inches to the ceiling. Do not install heater behind towel rack or door, upside down or sideways, in the floor, in the ceiling, or in closets.

Architect's and Engineer's Specifications

The electric fan-forced architectural wall heater shall be as manufactured by Berko, A Marley Engineered Products Brand, Bennettsville, SC. Heaters shall be certified by ETL to standard for heating equipment and meet UL standard 2021. All capacities, voltages, physical sizes, grille arrangements and options shall be specified in the heater schedule. The heater shall be designed for wall recess or surface mounting.

Heater Assembly: The heater assembly which fits into the back box shall consist of an 0.120" thick, powder coated aluminum die cast part fan panel / panel grille which are mounted all of the operational parts of the heater. The front grille shall be of the louvered type finished in polyester powder coating which resists fading and abrasion.

Heating Elements: The heating elements shall be warranted for five years and shall be of non-glowing design consisting of 80-20 Ni/Cr resistance wire enclosed in a steel sheath to which steel plate fins are brazed. The heating element shall cover the entire air discharge area to ensure uniform heating of all discharge air.

Thermal Limit: The heater shall be equipped with a manual-reset safety limit control that will automatically shut off heater in event of overheating due to any cause. The safety cutouts shall directly interrupt power to the elements. A red warning light will illuminate (visible at top of heater grille) to alert that this control has been activated.

Fan and Motor Assembly: The motor and fan assembly shall be direct drive and mounted on rigid heavy gauge brackets for quiet operation. The fan shall be five-bladed aluminum. The fan motor shall be totally enclosed.

Fan Delay Control: Fan control shall delay fan startup of the fan motor until the heating elements have warmed up. It shall maintain motor operation after heating elements have been de-energized to dissipate residual heat build-up.

Temperature Control: The heating unit is designed to be controlled using a mechanical type two pole thermostat. The tamperproof thermostat shall be of the bi-metallic, snap-action with enclosed contacts. It shall be completely concealed behind the front cover to become tamper-proof.

Disconnect Switch: This ON/OFF switch shall be mounted in the back box to disconnect single point connection to power supply for the internal electrical components, including the heating element. It will be completely concealed behind the front grille panel.

Low Voltage Relays: Normally "open" 24-volt and 120-volt low voltage holding coil relays shall be available as optional equipment to control 208, 240, and 277 volt heaters in conjunction with central energy control systems. The built-in thermostat can then be used as one of the thermostats in a automatic set back operation.