JRK SERIES
Commercial/Industrial Single-Element Infrared Heater

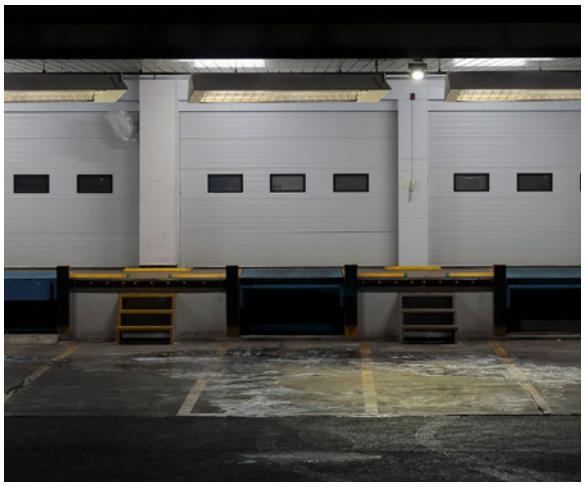

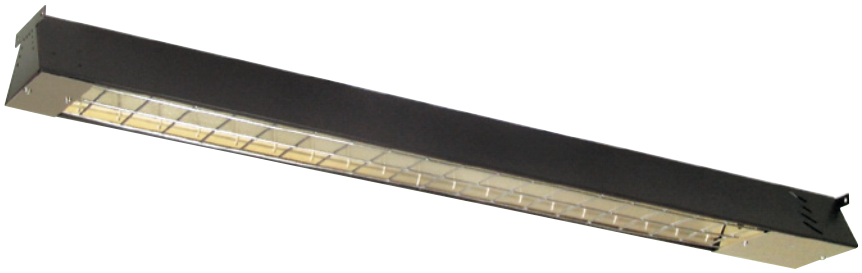

Technical Specifications:

Element Type: Quartz Lamp
Reflection Angles: 60° Sym.

Ideal Spaces:

Parking Garages
Showrooms
Work Stations
Loading Docks
Aircraft Hangers
Warehouses

Bronze

- Ideal for supplemental and spot heating
- Soft, efficient comfort: heat people and objects not the air for optimal energy efficiency
- Energy savings: provides a low cost energy efficient alternative to propane/gas heat
- Uniform, localized heating: provides instant, fully directional space heating
- Clean, safe comfort: no moving air/parts, no dust, no combustion, no fumes
- Low maintenance with no moving parts or filters, minimal servicing needed
- Heavy-duty gold anodized reflector has one of the highest levels for radiating heat energy
- Optional HWG wire guard provides a protective safety screen preventing objects contacting hot element
- Horizontal ceiling mount with supplied chains or to wall using the optional FRPWMB wall mounting bracket
- High quality finish and steel internal sheet metal parts give excellent service under most operating conditions, including coastal salt air and most industrial atmospheres*

NOTE: Quartz Lamp: used indoors and outdoors for snow melting and spot heating.

*Finish not intended for direct salt spray exposure in marine applications or highly corrosive greenhouse, swimming pool, chemical storage or industrial atmospheres. Maintain at least 5 ft. in radiant path, between bottom of heater and combustible material. Pigtail element leads for a more positive connection in high-traffic areas where physical abuse.

Intertek

2 YEAR WARRANTY ELEMENT

1 YEAR WARRANTY WORKMANSHIP

JRK SERIES
Commercial/Industrial Single-Element Infrared Heater

Scan the QR code to access additional specs and features

Models & Specifications:

	ITEM INFORMATION		ELECTRICAL DATA				DIMENSIONAL DATA	
	CATALOG NO.	UPC	VOLTS	WATTS	BTU/HR.	AMPS	HEIGHT	SHIP WT.
●	JRK41512	685360082950	120	1500	5,118	12.5	46″	9 lbs
●	JRK42020	685360082967	208	2000	6,824	9.6	46″	9 lbs
●	JRK42024	685360082974	240	2000	6,824	8.3	46″	9 lbs
●	JRK53020	685360083032	208	3000	10,236	14.4	57″	11 lbs
●	JRK53024	685360083049	240	3000	10,236	12.5	57″	11 lbs
●	JRK42027	685360082981	277	2000	6,824	7.2	46″	9 lbs
●	JRK42034	685360082998	347	2000	6,824	5.8	46″	9 lbs
●	JRK42048	685360083018	480	2000	6,824	4.2	46″	9 lbs
●	JRK42060	685360083025	600	2000	6,824	3.3	46″	9 lbs
●	JRK53027	685360083056	277	3000	10,236	10.8	57″	11 lbs
●	JRK53034	685360083063	347	3000	10,236	8.6	57″	11 lbs
●	JRK53048	685360083087	480	3000	10,236	6.3	57″	11 lbs
●	JRK53060	685360083094	600	3000	10,236	5.0	57″	11 lbs

SKU Legend: ◆ **= Popular Products** ● **= Extended Offering** (Contact your local Marley Sales Representative for typically associated lead times)

NOTE: Quartz Lamp: used indoors for spot heating. Maintain at least 5 ft. in radiant path, between bottom of heater and combustible material. Pigtail element leads for a more positive connection in high-traffic areas where physical abuse.

Optional Accessories:

CATALOG NO.	UPC	DESCRIPTION	COMPATIBLE WITH	CARTONS	SHIP WT.
JWG46	685360138374	Wire Guard	JRK4	1	1 lbs
JWG57	685360138381	Wire Guard	JRK5	1	1 ½ lbs

Dimensions and Clearances:

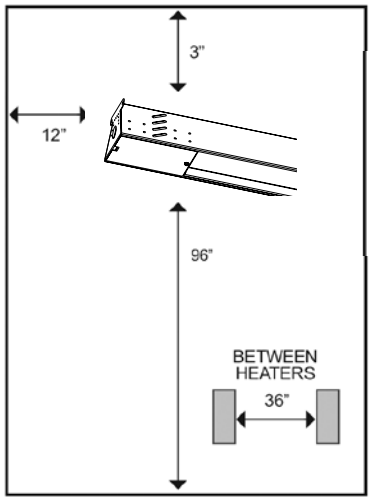

MOUNTING CLEARANCES

- 12 in. to vertical side walls
- 36 in. between heaters mounted side by side. Heaters may be mounted end to end.
- 3 in. to ceiling
- 96 in. to floor



