Industrial Heat Trace System Installation Manual

for

BERKO® A Marley Engineered Products Brand

"Controlled Document, changes require authorization from the certification agency"

Marley Engineered Products
425 Hanley Industrial Ct,
St Louis, Mo 63144
314.644.4300

Heating Cable Model Names:

Model Series Name	Max. continuous operating temperature (Power on or off)	Max. intermittent temperature (power off)
*CRGX or LSRX**-1/2CR	150°F (65°C)	185°F (85°C)
*CRGX or LSRX**-1/2CT	150°F (65°C)	185°F (85°C)
*MSRX**-1/2CT	248°F (120°C)	392°F (200°C)
*HSRX**-1/2CT	302°F (150°C)	482°F (250°C)

* Model Series includes Prefix BK-
** indicates place holder for cable wattage per foot, the wattage per foot is not applicable for this table

*CRGX and *LSRX *Power output per unit length*

3: Nominal Power Output 3W/ft (10W/m) @50°F (10°C) on metal pipe

5: Nominal Power Output 5W/ft (16W/m) @50°F (10°C) on metal pipe

8: Nominal Power Output 8W/ft (26W/m) @50°F (10°C) on metal pipe

10: Nominal Power Output 10W/ft (33W/m) @50°F (10°C) on metal pipe

12: Nominal Power Output 12W/ft (40W/m) @50°F (10°C) on metal pipe

[Note] 12W/ft Only available in Supply Voltage: 2 (200 – 277V)

*MSRX and *HSRX Series *Power output per unit length*

5: Nominal Power Output 5W/ft (16W/m) @50°F (10°C) on metal pipe

10: Nominal Power Output 10W/ft (33W/m) @50°F (10°C) on metal pipe

15: Nominal Power Output 15W/ft (49W/m) @50°F (10°C) on metal pipe

20: Nominal Power Output 20W/ft (66W/m) @50°F (10°C) on metal pipe

* Series includes Prefix BK-

- **Manufacturer:** Marley Engineered Products - BERKO

- **Associated International Standards:**

US Standards; FM 3600: 2022, ANSI/UL 50E:2020, ANSI/UL 60079-0:2020, ANSI/UL 60079-7:2021, ANSI/UL 60079-30-1:2017, ANSI/UL 60079-31:2015

CA Standards; CSA C22.2 No. 94.2:2020, CSA C22.2 No. 60079-0:2019, CSA C22.2 No. 60079-7:2018, CSA C22.2 No. 60079-30-1:2017, CSA C22.2 No. 60079-31:2015, CSA C22.2 No. 60529:2016

- **Approvals: FM approved (US and Canada)**



FM US Certificate Number: FM26US0013X

Class I, Division 2, Groups A, B, C and D T*

Class II/III, Division 2, Groups F and G T*

Class I, Zone 1, AEx 60079-30-1 IIC T* Gb; Zone 21, AEx 60079-30-1 IIIC T* °C Db

Class I, Zone 1, AEx eb IIC T* Gb; Zone 21, AEx tb IIIC T* °C Db

Type 4X, IP66

Ta = -40°F to +131°F (-40°C to +55°C)

T*: For T-rating, please refer to cable documentation.

FM CANADA Certificate Number: FM26CA0003X

Class I, Division 2, Groups A, B, C and D T*

Class II/III, Division 2, Groups F and G T*

Class I, Zone 1, Ex 60079-30-1 IIC T* Gb; Zone 21, Ex 60079-30-1 IIIC T* °C Db

Class I, Zone 1, Ex eb IIC T* Gb; Zone 21, Ex tb IIIC T* °C Db

Type 4X, IP66

Ta = -40°F to +131°F (-40°C to +55°C)

T*: For T-rating, please refer to cable documentation.

• Revision History

Rev	Date	Revised
02	04-01-2026	Initial release
03	05-11-2026	HSRX T-rating updated

Contents

1.0 MARLEY ENGINEERED PRODUCTS HEAT TRACING SYSTEM OVERVIEW 6
2.0 Series *CRGX or *LSRX with Suffix -CR or -CT Self-regulating Heating Cable 7
3.0 Series *MSRX with Suffix -CT Self-regulating Heating 11
4.0 Series *HSRX with Suffix -CT Self-regulating Heating Cable 14
5.0 Multiple Entry Power Connection Kit, Model MEP-HT-IMC-3 and MEP-HT-IMC-3-2P 17
6.0 Single Entry Power Connection Kit, Model MEP-HT-IPC-1 21
7.0 Tee/Splice Connection & End Termination Kit, Model MEP-HT-IST-1 24
8.0 End Seal / In-Line Splice Connection Kit, Model MEP-HT-IES-1 27
Appendix 1. Caution Label 29
Appendix 2. Installation Instruction of heating cable 29
Appendix 3. Installation and Inspection Records 444

* Series includes Prefix BK-

1.0 MARLEY ENGINEERED PRODUCTS HEAT TRACING SYSTEM OVERVIEW

1.1 System Diagram

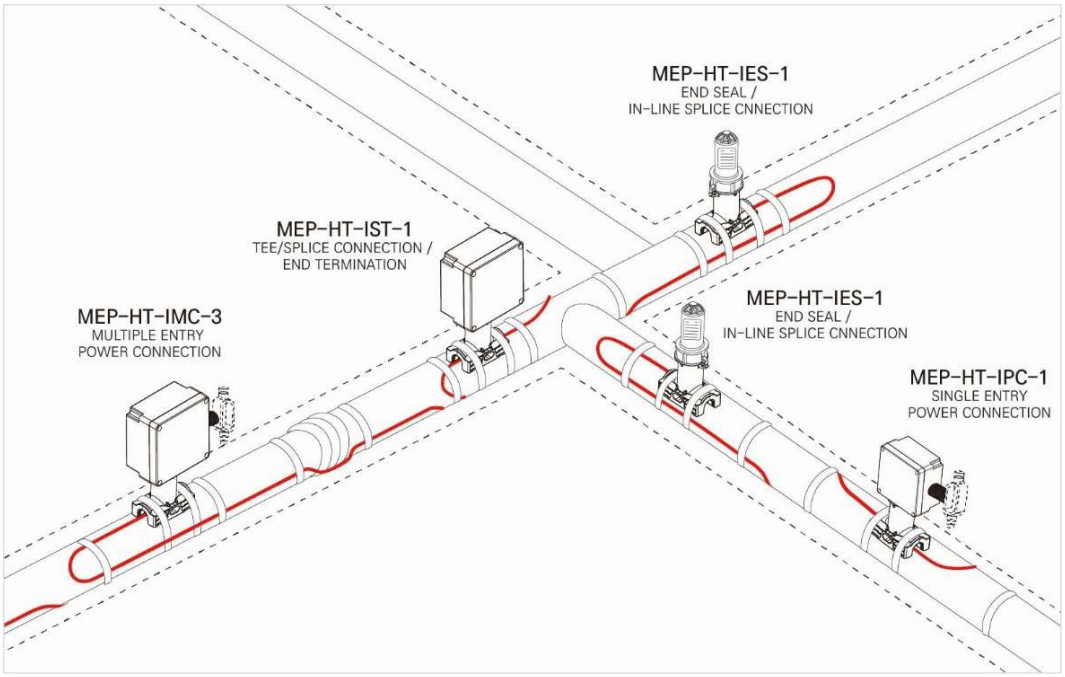

Heating Cables Series	***CRGX-CR or *LSRX-CR, *CRGX-CT or *LSRX -CT** 3, 5, 8, 10, 12 W/ft @50°F on pipe *[Note] 12W/ft Only available in Supply Voltage: 2 (200 – 277V)* ***MSRX-CT** 5, 10, 15, 20 W/ft @50°F on pipe *** HSRX-CT** 5, 10, 15, 20 W/ft @50°F on pipe
MEP-HT-IMC-3 MEP-HT-IMC-3-2P	Power Connection Kits with Junction Box for Multiple Heating Cables • MEP-HT-IMC-3 has one 3/4" through-hole for 3/4" conduit and fittings to connect power to a maximum of three heating cables. • MEP-HT-IMC-3-2P has two 3/4" through-holes for 3/4" conduit and fittings to connect dual power to two heating cables.
MEP-HT-IPC-1	Power Connection Kit with Junction Box for Single Heating Cable
MEP-HT-IST-1	Tee, Splice Connection or End Termination Kit with Junction Box
MEP-HT-IES-1	End Seal or In-Line Splice Connection Kit

* Series includes Prefix BK-

2.0 Series *CRGX and *LSRX with suffix -CR or -CT Self-regulating Heating Cable

Series *CRGX and *LSRX with Suffix -CR or -CT Series self-regulating heating cable can be used for freeze protection and temperature maintenance for pipe or tank up to 150°F (65°C) in nonhazardous and hazardous locations.

* Series includes Prefix BK-

2.1 Basic Construction

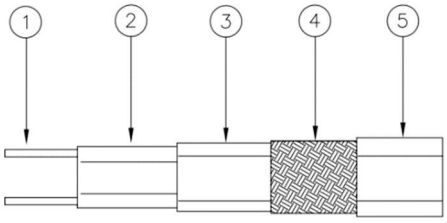

① Bus Wires (Nickel Plated Copper)

② Conductive Core (Heating Matrix)

③ Insulation Jacket (Modified Polyolefin)

④ Metallic Braid (Tinned Copper)

⑤ Outer Jacket (CR: Modified Polyolefin, CT: Fluoropolymer)

2.2 Technical Specification

Max. Intermittent Exposure Temp. (Heating device de-energized)	185°F (85°C)
Max. Continuous Maintain Temp. (Heating device energized or de-energized)	150°F (65°C)
Supply Voltage	100 – 120V, 200 - 277V
Nominal Power Output	3, 5, 8, 10, 12* W/FT @50°F (*12W/ft only available in supply voltage of 200 – 277V)
Bus wire size	16 AWG
Min. Bending Radius	0.5” @68°F (13mm @20°C), 1.6” @-58°F (40mm @-50°C)
Min. Start-up Temperature	-40°F (-40°C)
Min. Installation Temperature	-58°F (-50°C)
Nominal Dimensions	* CRGX-CR and LSRX-CR: 0.49 in x 0.25 in (12.5mm x 6.0mm) * CRGX-CT and LSRX-CT: 0.46 in x 0.21 in (11.8mm x 5.0mm)
Outer Jacket Color	* CRGX-CR and LSRX-CR: Dark Gray * CRGX-CT and LSRX-CT: Gray
Temperature Classification	T6 (85°C)
Material	Insulation: Modified Polyolefin Outer jacket: CR (Modified Polyolefin), CT (Fluoropolymer)

* Series includes Prefix BK-

2.3 Heating Cable Catalog Number

BK-CRGX or BK-LSRX	10	-	2	CR
Model Name	Rated Output [Watts/ft]		Voltage	Outer Jacket
3, 5, 8, 10, 12 on 50°F (10°C) Pipe			1=100-120 V 2= 200-277 V	CR: Modified Polyolefin CT: Fluoropolymer

[Note] 12W/ft Only available in Supply Voltage: 2 (200 – 277V)

2.4 Nominal Power Output Rating on Metal Pipes at 120Vac / 240Vac

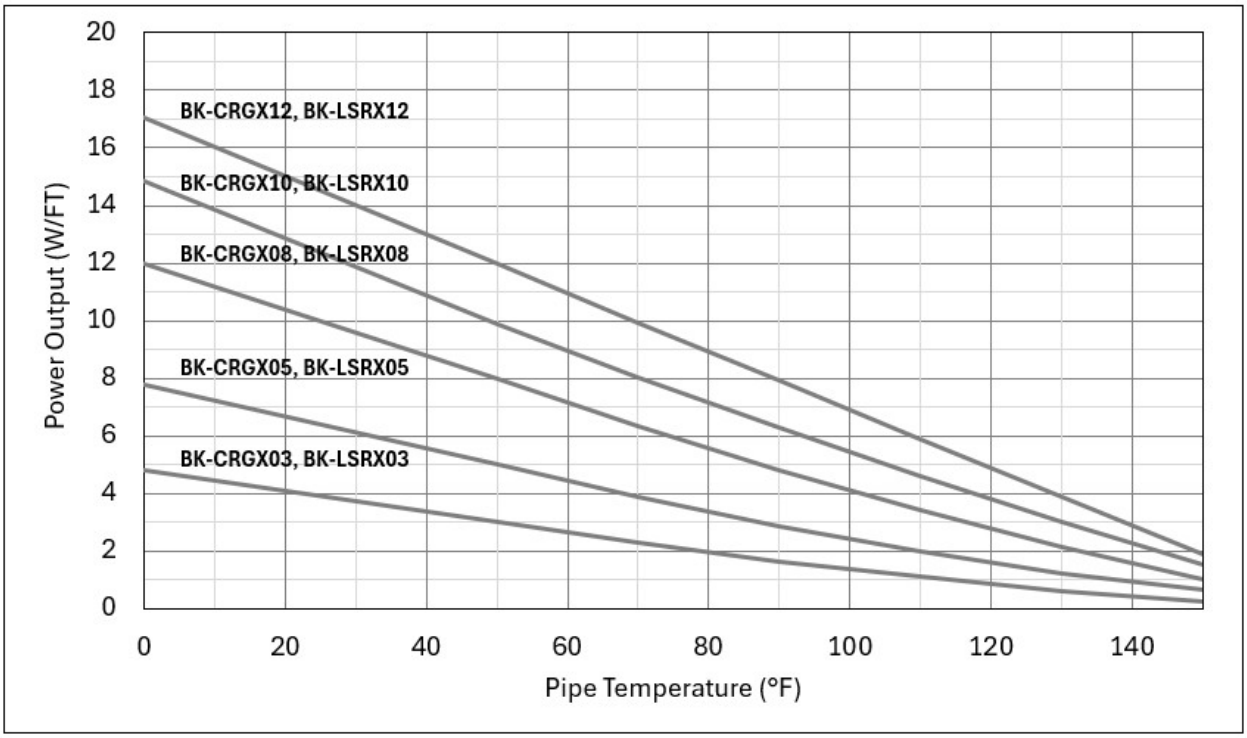

2.5 Circuit Length Adjustment Factor

Voltage	*CRGX or *LSRX03-2	*CRGX or *LSRX05-2	*CRGX or *LSRX08-2	*CRGX or *LSRX10-2	*CRGX or *LSRX12-2
208V	0.969	0.957	0.925	0.920	0.915
240V	1.000	1.000	1.000	1.000	1.000
277V	1.054	1.065	1.088	1.120	1.130

* Series includes Prefix BK-

2.6 Power Adjustment Factor

Voltage	*CRGX or *LSRX03-2	*CRGX or *LSRX05-2	*CRGX or *LSRX08-2	*CRGX or *LSRX10-2	*CRGX or *LSRX12-2
208V	0.800	0.820	0.880	0.910	0.943
240V	1.000	1.000	1.000	1.000	1.000
277V	1.190	1.170	1.120	1.100	1.071

* Series includes Prefix BK-

2.7 Maximum Circuit Lengths Based on Circuit Breaker Sizes

* Catalog Number	Start-Up Temperature °F (°C)	Maximum Circuit Lengths per Circuit Breaker, Feet							
		120V				240 V			
		15A	20A	30A	40A	15A	20A	30A	40A
CRGX03 or LSRX03	50 (10)	327	377	377	377	654	732	732	732
	0 (-18)	200	266	377	377	400	533	732	732
	-20 (-29)	173	231	346	377	346	461	692	732
	-40 (-40)	152	203	305	377	305	406	610	732
CRGX05 or LSRX05	50 (10)	200	267	302	302	400	533	604	604
	0 (-18)	126	168	252	302	252	336	504	604
	-20 (-29)	110	146	220	293	220	293	439	586
	-40 (-40)	97	130	195	259	195	259	389	519
CRGX08 or LSRX08	50 (10)	154	205	243	243	307	409	482	482
	0 (-18)	104	138	207	243	207	276	415	482
	-20 (-29)	92	122	184	243	184	245	367	482
	-40 (-40)	82	110	165	219	165	219	329	439
CRGX10 or LSRX10	50 (10)	125	167	207	207	250	334	410	410
	0 (-18)	90	120	179	207	179	239	359	410
	-20 (-29)	81	107	161	207	161	215	322	410
	-40 (-40)	73	97	146	195	146	195	292	390
CRGX12 or LSRX12	50 (10)					222	295	322	322
	0 (-18)					156	209	313	322
	-20 (-29)					140	187	280	322
	-40 (-40)					127	169	253	322

* Catalog number includes Prefix BK-

2.8 Specific Conditions of Use

- The BK-LSRX and BK-CRGX Series Heating Cables must be installed using MARLEY ENGINEERED PRODUCTS MEP-HT-IPC-1, MEP-HT-IMC-3, MEP-HT-IST-1, and MEP-HT-IES-1 Connection Kits.
- Refer to the installation instructions to reduce the potential of an electrostatic charging hazard on the enclosures of the connection kits.
- The end-user shall mount the equipment per MARLEY ENGINEERED PRODUCTS instructions.

2.9 Schedule of Limitations

- The maximum intermittent exposure temperature (Heating device de-energized) is 185°F (85°C).
- The maximum continuous exposure temperature (heating device energized or de-energized) is 150°F (65°C).
- The maximum supply voltage is 100 - 120V for the (-1) models, and 200 – 277 V for the (-2) models.
- The minimum installation temperature is -58°F (-50°C).
- The minimum bend radius is 40mm at -58°F (-50°C).
- T-code ratings for Series BK-CRGX and BK-LSRX with -CR or -CT Series Jacket Heating Cables is T6.

3.0 Series *MSRX with Suffix -CT Self-regulating Heating Cable

Series *MSRX with Suffix -CT self-regulating heating cable can be used for freeze protection and temperature maintenance for pipe or tank up to 250°F (120°C) in nonhazardous and hazardous locations.

* Series includes Prefix BK-

3.1 Basic Construction

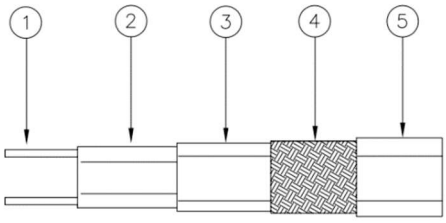

① Bus Wires (Nickel Plated Copper)
② Conductive Core (Heating Matrix)
③ Insulation Jacket (Fluoropolymer)
④ Metallic Braid (Tinned Copper)
⑤ Outer Jacket (Fluoropolymer)

3.2 Technical Specification

Max. Intermittent Exposure Temp. (Heating device de-energized)	392°F (200°C)
Max. Continuous Operating Temp. (Power on or off)	250°F (120°C)
Supply Voltage	100 – 120 V, 200 - 277 V
Output Wattage	5, 10, 15, 20 W/ft @50°F on pipe
Bus wire gauge	16 AWG
Min. Bending Radius	0.8” @70°F (20mm @20°C), 1.8” @-76°F (45mm @-60°C)
Min. Start-up Temperature	-40°F (-40°C)
Min. Installation Temperature	-76°F (-60°C)
Nominal Dimensions	0.43 in x 0.20 in (11.0mm x 5.0mm)
Outer Jacket Color	Yellow
Temperature Classification	T3 (200°C)
Material	Insulation: Fluoropolymer Outer jacket: Fluoropolymer

3.3 Heating Cable Catalog Number

BK- MSRX	20	-	2	CT
Model Name	Rated Output [Watts/ft] 5, 10, 15, 20 on 50°F (10°C) Pipe		Voltage 1= 120 Vac 2= 200-277 Vac	Outer Jacket CT: Fluoropolymer

3.4 Nominal Power Output Rating on Metal Pipes at 120Vac / 240Vac

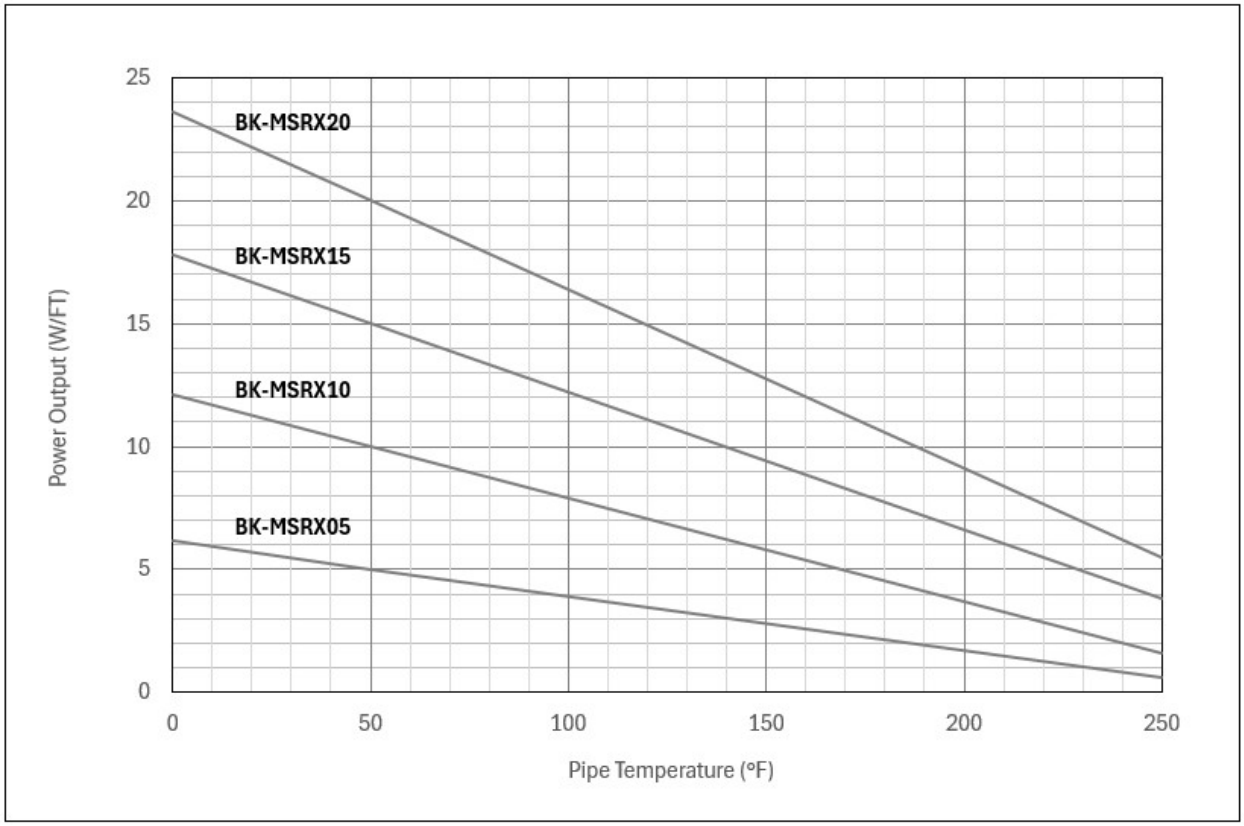

3.5 Circuit Length Adjustment Factor

Voltage	*MSRX05-2CT	*MSRX10-2CT	*MSRX15-2CT	*MSRX20-2CT
208V	0.94	0.94	0.93	0.94
240V	1.00	1.00	1.00	1.00
277V	1.09	1.09	1.11	1.11

* Series includes Prefix BK-

3.6 Power Adjustment Factor

Voltage	*MSRX05-2CT	*MSRX10-2CT	*MSRX15-2CT	*MSRX20-2CT
208V	0.88	0.89	0.90	0.91
240V	1.00	1.00	1.00	1.00
277V	1.06	1.07	1.07	1.06

* Series includes Prefix BK-

3.7 Maximum Circuit Lengths Based on Circuit Breaker Sizes

*Catalog Number	Start-Up Temperature °F (°C)	Maximum Circuit Lengths per Circuit Breaker, Feet									
		120V					240 V				
		15A	20A	30A	40A	50A	15A	20A	30A	40A	50A
MSRX05	50 (10)	180	240	358	358	358	360	480	709	709	709
	0 (-18)	141	187	281	358	358	281	375	562	709	709
	-20 (-29)	129	172	258	345	358	258	345	517	689	709
	-40 (-40)	120	159	239	319	358	239	319	478	638	709
MSRX10	50 (10)	107	142	213	253	253	213	284	427	502	502
	0 (-18)	87	116	174	232	253	174	232	348	464	502
	-20 (-29)	81	108	162	216	253	162	216	324	432	502
	-40 (-40)	76	101	152	202	253	152	202	303	404	502
MSRX15	50 (10)	78	104	156	203	203	156	208	312	400	400
	0 (-18)	65	87	130	174	203	130	174	261	347	400
	-20 (-29)	61	82	122	163	203	122	163	245	326	400
	-40 (-40)	58	77	115	154	192	115	154	230	307	384
MSRX20	50 (10)	58	78	117	155	174	117	155	233	311	348
	0 (-18)	50	67	100	134	167	100	134	200	267	334
	-20 (-29)	47	63	95	126	158	95	126	190	253	316
	-40 (-40)	45	60	90	120	150	90	120	180	240	300

*

*Catalog Number includes Prefix BK-

3.8 Specific Conditions of Use

- The BK-MSRX Heating Cables must be installed using MARLEY ENGINEERED PRODUCTS MEP-HT-IPC-1, MEP-HT-IMC-3, MEP-HT-IST-1, and MEP-HT-IES-1 Connection Kits.
- Refer to the installation instructions to reduce the potential of an electrostatic charging hazard on the enclosures of the connection kits.
- The end-user shall mount the equipment per MARLEY ENGINEERED PRODUCTS instructions.

3.9 Schedule of Limitation

- The maximum intermittent exposure temperature (Heating device de-energized) is 392°F (200°C).
- The maximum continuous exposure temperature (heating device energized or de-energized) is 250°F (120°C).
- The maximum supply voltage is 100 – 120V for the (-1) models, and 200 – 277 V for the (-2) models.
- The minimum installation temperature is -76°F (-60°C).
- The minimum bend radius is 45mm at -76°F (-60°C).
- T-code ratings is T3.

4.0 Series *HSRX with Suffix -CT Self-regulating Heating Cable

Series *HSRX with Suffix -CT self-regulating heating cable can be used for freeze protection and temperature maintenance for pipe or tank up to 302°F (150°C) in nonhazardous and hazardous locations.

* Series includes Prefix BK-

4.1 Basic Construction

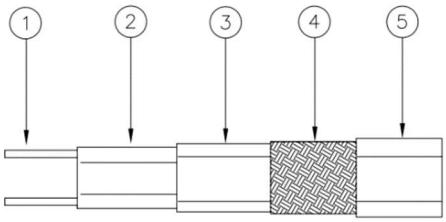

① Bus Wires (Nickel Plated Copper)
② Conductive Core (Heating Matrix)
③ Insulation Jacket (Fluoropolymer)
④ Metallic Braid (Tinned Copper)
⑤ Outer Jacket (Fluoropolymer)

4.2 Technical Specification

Max. Intermittent Exposure Temp. (Heating device de-energized)	482°F (250°C)
Max. Maintain or Continuous Exposure Temp. (Power on or off)	302°F (150°C)
Supply Voltage	100 – 120V, 200 – 277V
Output Wattage	5, 10, 15, 20 W/ft @50°F on pipe
Bus wire	16 AWG
Min. Bending Radius	0.8” 70°F (20mm @20°C), 1.8” @-76°F (45mm @-60°C)
Min. Start-up Temperature	-40°F (-40°C)
Min. Installation Temperature	-76°F (-60°C)
Outer Jacket Color	Red
Heating Cable Dimensions (Nominal)	0.50 in x 0.20 in (13.0mm x 5.0mm)
Temperature Classification	US and Canada: T3A/T180°C: *HSRX05, *HSRX10, *HSRX15 T2D/T215°C: *HSRX20
Material	Insulation: Fluoropolymer Outer jacket: Fluoropolymer

* Series includes Prefix BK-

4.3 Heating Cable Catalog Number

BK-HSRX	20	-	2	CT
Model Name	Rated Output [Watts/m]		Voltage	Outer Jacket
	5, 10, 15, 20 on 50°F (10°C) pipe		1= 100-120 V 2= 200-277 V	CT: Fluoropolymer

4.4 Nominal Power Output Rating on Metal Pipes at 120Vac / 240Vac

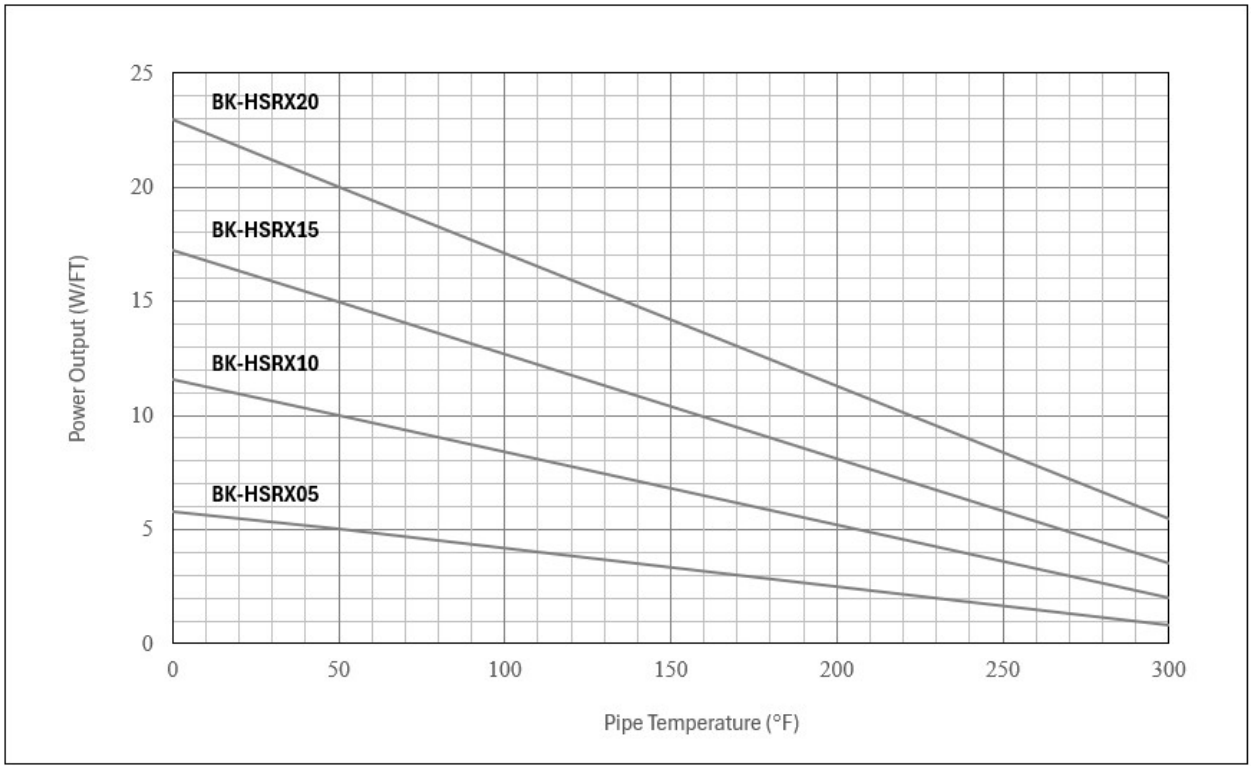

4.5 Circuit Length Adjustment Factor

Voltage	*HSRX05-2	*HSRX10-2	*HSRX15-2	*HSRX20-2
208V	0.93	0.94	0.94	0.94
240V	1.00	1.00	1.00	1.00
277V	1.10	1.10	1.11	1.11

* Series includes Prefix BK-

4.6 Power Adjustment Factor

Voltage	*HSRX05-2	*HSRX10-2	*HSRX15-2	*HSRX20-2
208V	0.93	0.94	0.94	0.94
240V	1.00	1.00	1.00	1.00
277V	1.10	1.10	1.11	1.11

* Series includes Prefix BK-

4.7 Maximum Circuit Lengths Based on Circuit Breaker Sizes

*Catalog Number	Start-Up Temperature °F (°C)	Maximum Circuit Lengths per Circuit Breaker, Feet									
		120V					240 V				
		15A	20A	30A	40A	50A	15A	20A	30A	40A	50A
HSRX05	50 (10)	180	240	358	358	358	360	480	709	709	709
	0 (-18)	141	187	281	358	358	281	375	562	709	709
	-20 (-29)	129	172	258	345	358	258	345	517	689	709
	-40 (-40)	120	159	239	319	358	239	319	478	638	709
HSRX10	50 (10)	107	142	213	253	253	213	284	427	502	502
	0 (-18)	87	116	174	232	253	174	232	348	464	502
	-20 (-29)	81	108	162	216	253	162	216	324	432	502
	-40 (-40)	76	101	152	202	253	152	202	303	404	502
HSRX15	50 (10)	78	104	156	203	203	156	208	312	400	400
	0 (-18)	65	87	130	174	203	130	174	261	347	400
	-20 (-29)	61	82	122	163	203	122	163	245	326	400
	-40 (-40)	58	77	115	154	192	115	154	230	307	384
HSRX20	50 (10)	58	78	117	155	174	117	155	233	311	348
	0 (-18)	50	67	100	134	167	100	134	200	267	334
	-20 (-29)	47	63	95	126	158	95	126	190	253	316
	-40 (-40)	45	60	90	120	150	90	120	180	240	300

*Catalog Number includes Prefix BK-

4.6 Specific Conditions of Use

- The BK-HSRX Series Heating Cables must be installed using Marley Engineered Products MEP-HT-IPC-1, MEP-HT-IMC-3, MEP-HT-IST-1, and MEP-HT-IES-1 Series Connection Kits.
- Refer to the installation instructions to reduce the potential of an electrostatic charging hazard on the enclosures of the connection kits.
- The end-user shall mount the equipment per Marley Engineered Products instructions.

4.7 Schedule of Limitation

- The maximum intermittent exposure temperature (Heating device de-energized) is 482°F (250°C).
- The maximum continuous exposure temperature (heating device energized or de-energized) is 302°F (150°C).
- The maximum supply voltage is 100 - 120V for the (-1) models, and 200 – 277 V for the (-2) models.
- The minimum installation temperature is -76°F (-60°C).
- The minimum bend radius is 45mm at -76°F (-60°C).
- T-code ratings for the (5, 10, 15 W/ft) is T3, and T2D for the 20 W/ft

5.0 Multiple Entry Power Connection Kit, MEP-HT-IMC-3 and MEP-HT-IMC-3-2P

Power connection kit for use with Series *CRGX-CR, *LSRX-CR, *CRGX-CT, LSRX-CT, *MSRX-CT, and *HSRX-CT industrial self-regulating heating cables. **MEP-HT-IMC-3** can be used to connect power to a maximum of three heating cables. **MEP-HT-IMC-3-2P** can be used to connect dual power to two separate heating cable circuits.

* Series includes Prefix BK-

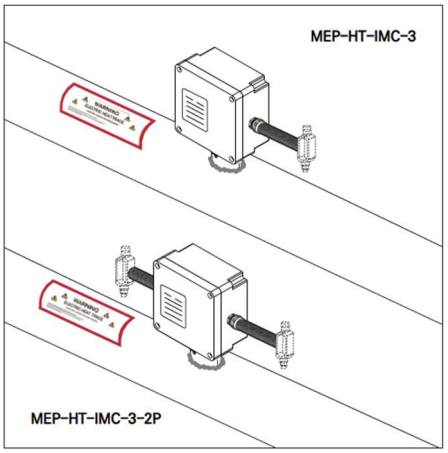

5.1 Kit Contents

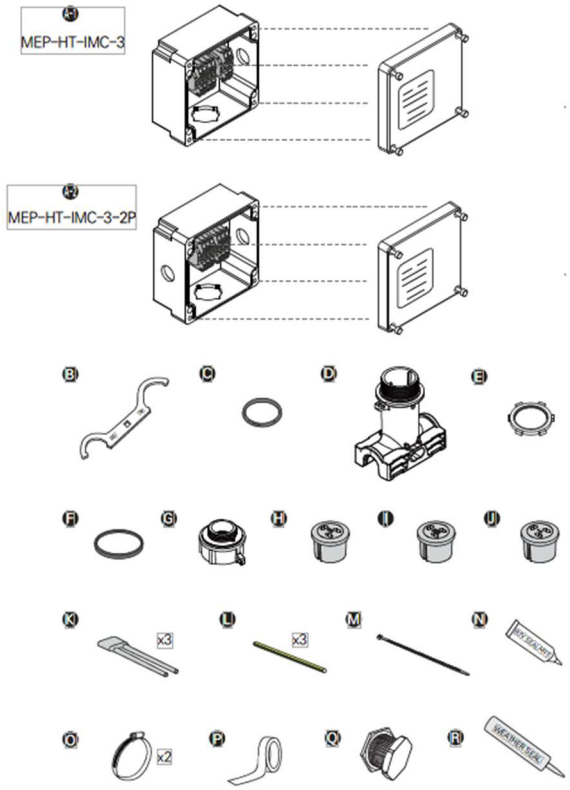

Item	Description	Qty.
A-1	MEP-HT-IMC-3 Junction Box Assembly	1
A-2	MEP-HT-IMC-3-2P Junction Box Assembly	1
B	Wrench	1
C	Stand O-Ring	1
D	Pipe Stand	1
E	Lock Nut	1
F	Square-Ring for Compression Cap	1
G	Compression Cap	1
H	Sm. Grommet for *CRGX-CT, *LSRX-CT and *MSRX	1
I	Med. Grommet for *CRGX-CR, and *LSRX-CR	1
J	Lg. Grommet for *HSRX	1
K	Core Sealer	3
L	Insulation Tube (Y/G)	3
M	Cable Tie	1
N	RTV Sealant	1
O	Pipe Strap (Sold Separately)	2
P	Fixing Tape (Sold Separately)	1
Q	Sealing Plug (Sold Separately)	1
R	Weather Seal (Sold Separately)	1

* Series includes Prefix BK-

5.2 Specifications

Heating cable capability	*CRGX-CR. *LSRX-CR, *CRGX-CT, *LSRX-CT, *MSRX-CT, *HSRX-CT
Ingress protection	NEMA Type 4X, IP66
Entries	1 x 3/4" NPT for MEP-HT-IMC-3, 2 x 3/4" NPT for MEP-HT-IMC-3-2P
Ambient Temperature Range	-40°F (-40°C) to +131°F (+55°C)
Min Installation Temperature	-40°F (-40°C)
Max. Conductor Size	8AWG Stranded (6AWG optional)
Supply Voltage	100-120 Vac, 200-277 Vac
Max. Circuit Breaker Size	50A heating cable circuit
Installation Accessories (sold separately)	Conduit and fittings, Sealing plug kit, Pipe straps, Fiberglass tape, Aluminum tape

* Series includes Prefix BK-

5.3 Wire Diagram

Power Connection: MEP-HT-IMC-3 with Single Power Entry

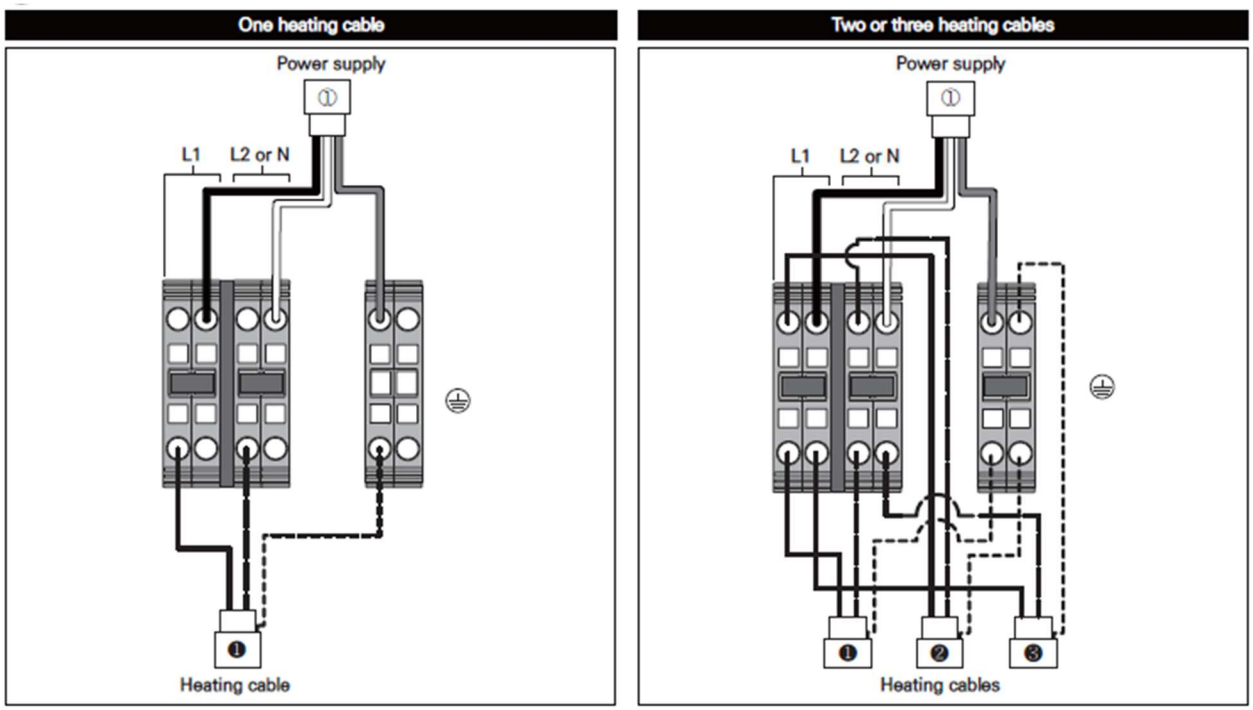

Power Connection: MEP-HT-IMC-3-2P with Dual Power Entries

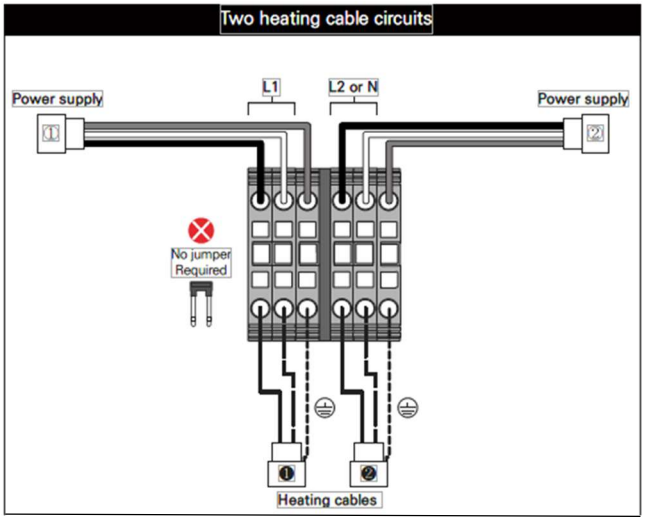

*** NOTE**

- For powering two heating cable circuits, use the designated MEP-HT-IMC-3-2P junction box available from Marley Engineered Products.
- MEP-HT-IMC-3-2P is supplied with two factory-engineered through-holes for dual power cable entry.
- Do **not** modify or drill additional holes in the standard MEP-HT-IMC-3 enclosure to accommodate dual circuits.

Terminal Block Wiring

*Note: When using the MEP-HT-IMC-3 Series Power Connection Kits for tee, splice, or end termination, unused through-holes must be sealed with MARLEY ENGINEERED PRODUCTS Sealing plug kit (sold separately).

Splice Connection

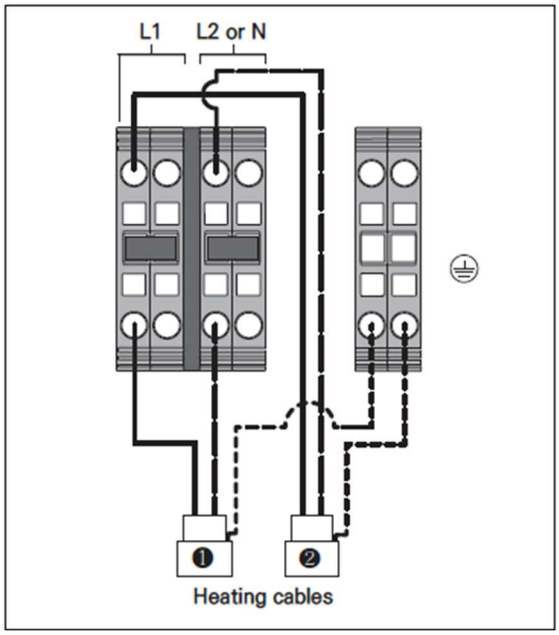

Tee Connection

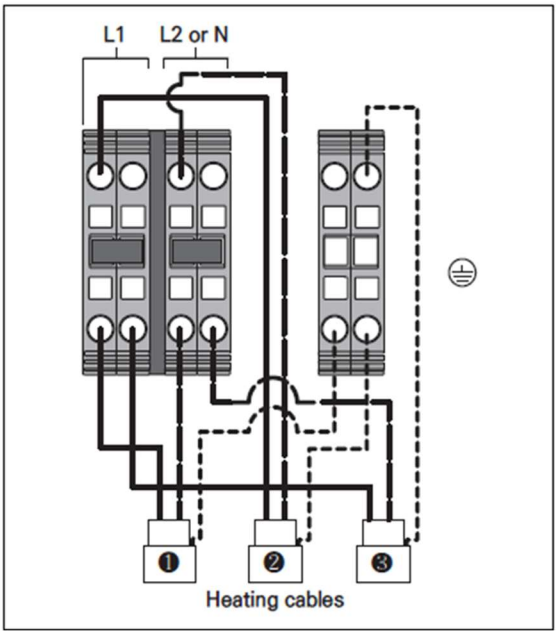

End Termination

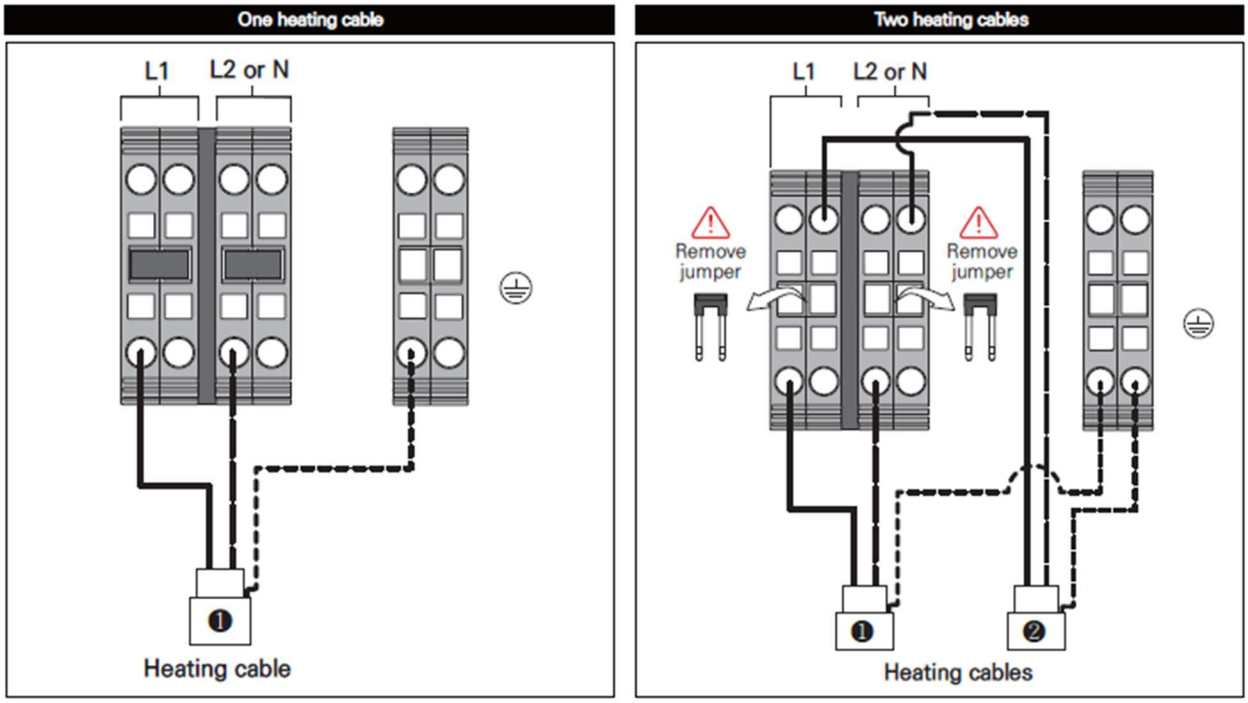

5.4 Specific Conditions of Use

- MEP-HT-IMC-3 Series Connection Kits must be installed using MARLEY ENGINEERED PRODUCTS BK-CRGX, BK-LSRX, BK-MSRX, BK-HSRX, Series Heating Cables.
- Refer to the installation instructions to reduce the potential of an electrostatic charging hazard on the enclosures of the connection kits.
- The end-user shall mount the equipment per MARLEY ENGINEERED PRODUCTS instructions.
- To use this kit for splice, tee, or end termination, MARLEY ENGINEERED PRODUCTS Sealing Plug must be purchased separately.

6.0 Single Entry Power Connection Kit, MEP-HT-IPC-1

Power connection kit for use with Series *CRGX-CR, *LSRX-CR, *CRGX-CT, LSRX-CT, *MSRX-CT, and *HSRX-CT industrial self-regulating heating cables. This kit is used to connect power to one heating cable.

* Series includes Prefix BK-

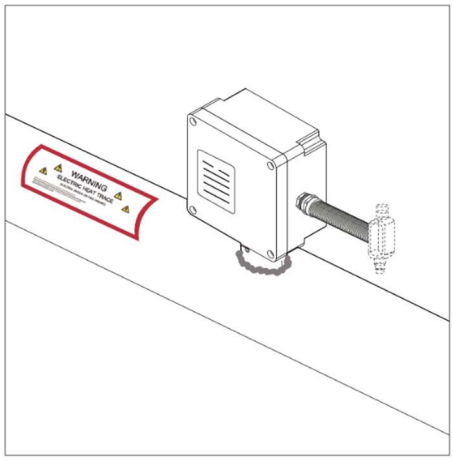

6.1 Kit Contents

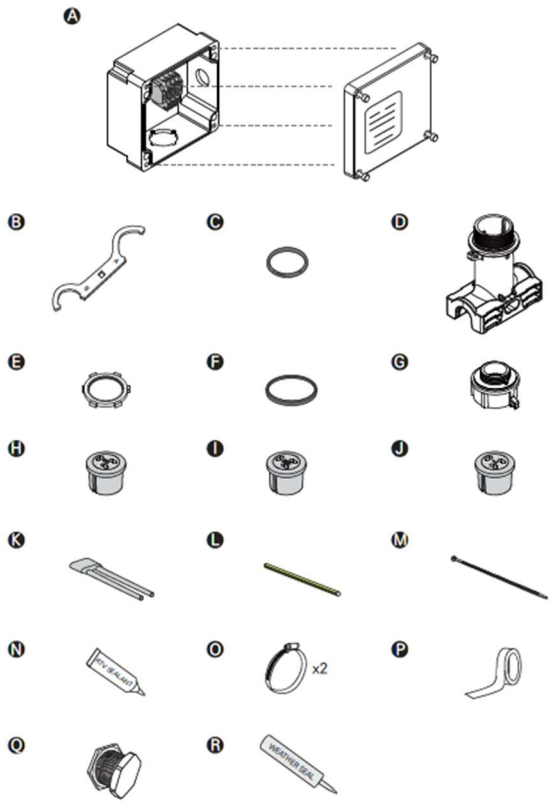

Item	Description	Qty.
A	Junction Box Assembly	1
B	Wrench	1
C	Stand O-Ring	1
D	Pipe Stand	1
E	Lock Nut	1
F	Square-Ring for Compression Cap	1
G	Compression Cap	1
H	Sm. Grommet for *CRGX-CT, *LSRX-CT and *MSRX	1
I	Med. Grommet for *CRGX-CR, and *LSRX-CR	1
J	Lg. Grommet for *HSRX	1
K	Core Sealer	1
L	Insulation Tube (Y/G)	1
M	Cable Tie	1
N	RTV Sealant	1
O	Pipe Strap (Sold Separately)	2
P	Fixing Tape (Sold Separately)	1
Q	Sealing Plug (Sold Separately)	1
R	Weather Seal (Sold Separately)	1

* Series includes Prefix BK-

6.2 Specifications

Heating cable capability	*CRGX-CR. *LSRX-CR, *CRGX-CT, *LSRX-CT, *MSRX-CT, *HSRX-CT
Ingress protection	NEMA Type 4X, IP66
Entries	1 x 3/4" NPT
Ambient Temperature Range	-40°F (-40°C) to +131°F (+55°C)
Min Installation Temperature	-40°F (-40°C)
Max. Conductor Size	8AWG Stranded (6AWG optional)
Supply Voltage	100-120 Vac, 200-277 Vac
Max. Circuit Breaker Size	50A heating cable circuit
Installation Accessories (sold separately)	Conduit and fittings, Sealing plug kit, Pipe straps, Fiberglass tape, Aluminum tape

* Series includes Prefix BK-

6.3 Wire Diagram

Power Connection

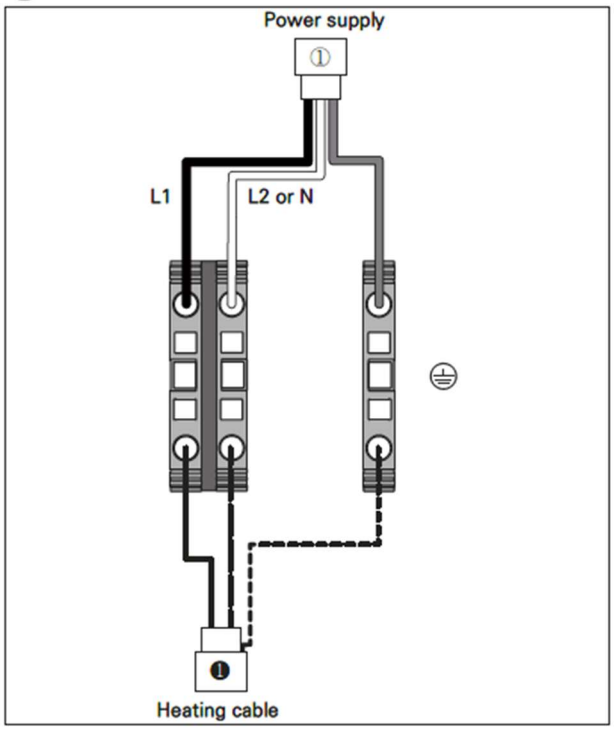

Splice Connection

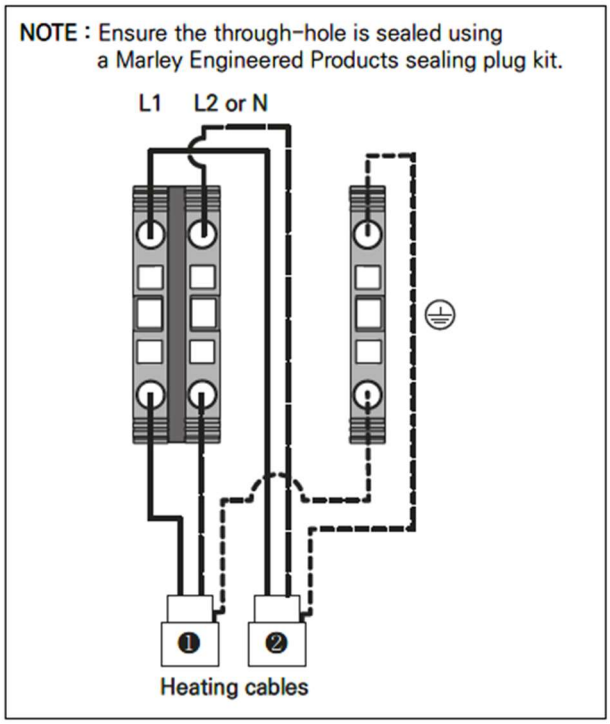

End Termination

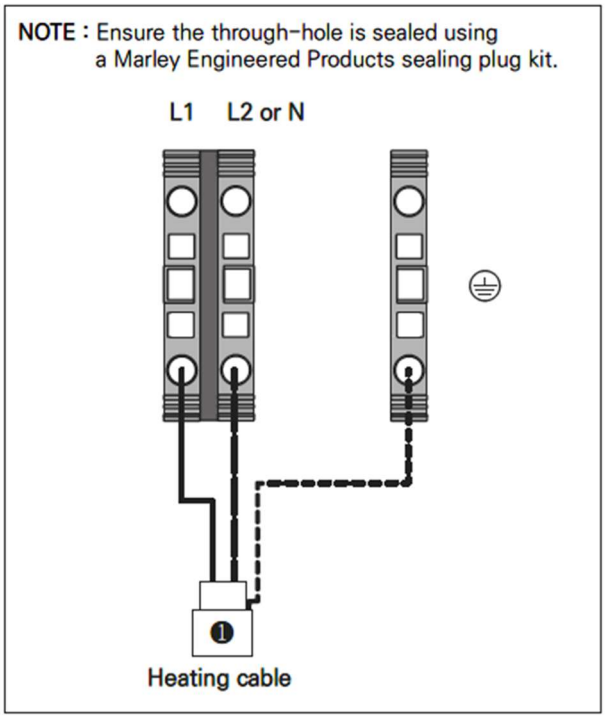

6.4 Specific Conditions of Use

- MEP-HT-IPC-1 Series Connection Kits must be installed using MARLEY ENGINEERED PRODUCTS BK-CRGX, BK-LSRX, BK-MSRX, BK-HSRX, Series Heating Cables.
- Refer to the installation instructions to reduce the potential of an electrostatic charging hazard on the enclosures of the connection kits.
- The end-user shall mount the equipment per MARLEY ENGINEERED PRODUCTS instructions.
- To use this kit for splice or end termination, MARLEY ENGINEERED PRODUCTS Sealing Plug must be purchased separately.

7.0 Tee/Splice Connection & End Termination Kit, MEP-HT-IST-1

Tee/Splice connection or End Termination kit for use with Series *CRGX-CR, *LSRX-CR, *CRGX-CT, LSRX-CT, *MSRX-CT, and *HSRX-CT industrial self-regulating heating cales.

* Series includes Prefix BK-

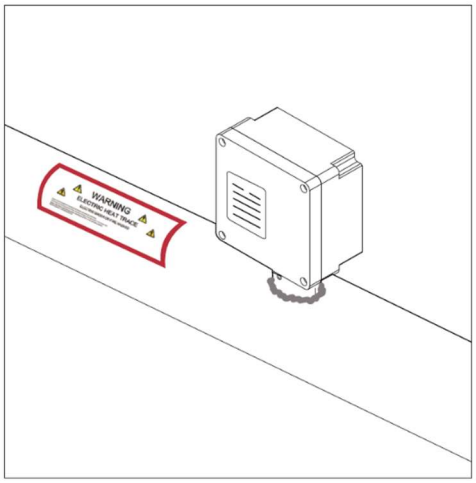

7.1 Kit Contents

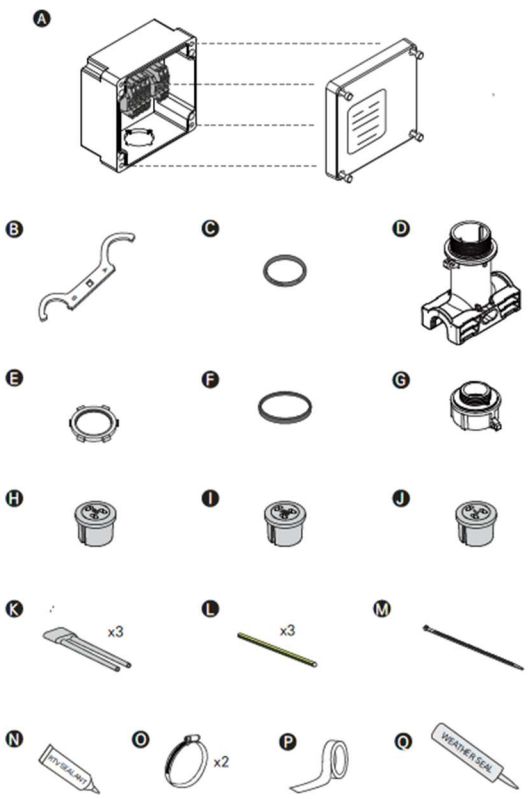

Item	Description	Qty.
A	Junction Box Assembly	1
B	Wrench	1
C	Stand O-Ring	1
D	Pipe Stand	1
E	Lock Nut	1
F	Square-Ring for Compression Cap	1
G	Compression Cap	1
H	Sm. Grommet for *CRGX-CT, *LSRX-CT and *MSRX	1
I	Med. Grommet for *CRGX-CR, and *LSRX-CR	1
J	Lg. Grommet for *HSRX	1
K	Core Sealer	3
L	Insulation Tube (Y/G)	3
M	Cable Tie	1
N	RTV Sealant	1
O	Pipe Strap (Sold Separately)	2
P	Fixing Tape (Sold Separately)	1
Q	Weather Seal (Sold Separately)	1

* Series includes Prefix BK-

7.2 Specifications

Heating cable capability	*CRGX-CR. *LSRX-CR, *CRGX-CT, *LSRX-CT, *MSRX-CT, *HSRX-CT
Ingress protection	NEMA Type 4X, IP66
Ambient Temperature Range	-40°F (-40°C) to +131°F (+55°C)
Min Installation Temperature	-40°F (-40°C)
Installation Accessories (sold separately)	Pipe straps, Fiberglass tape, Aluminum tape

* Series includes Prefix BK-

7.3 Wire Diagram

Splice Connection

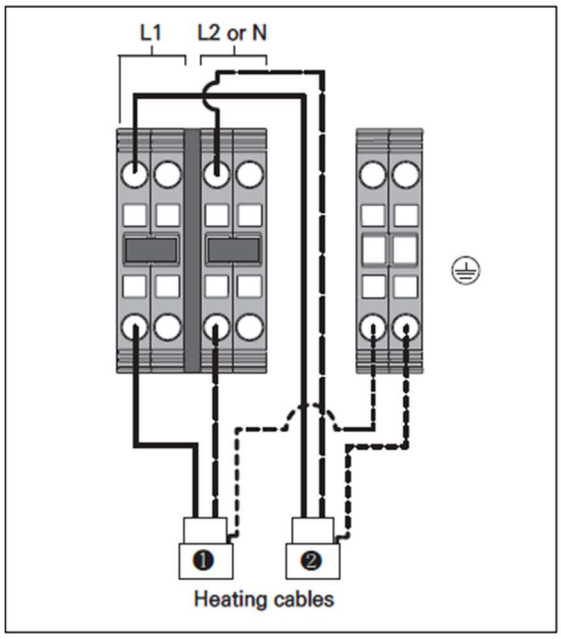

Tee Connection

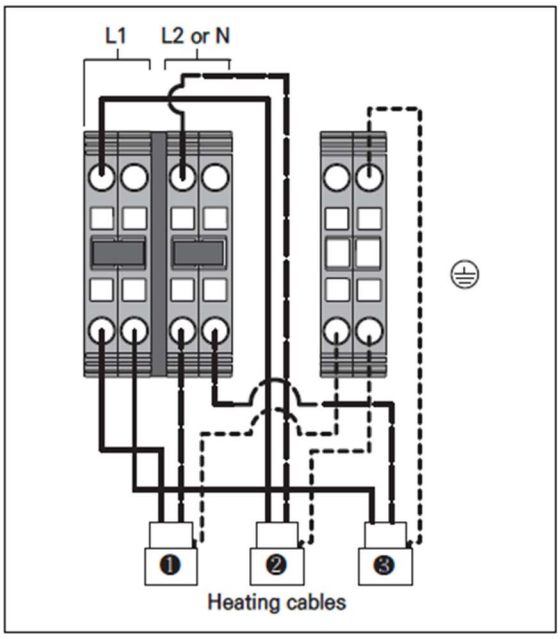

End Termination

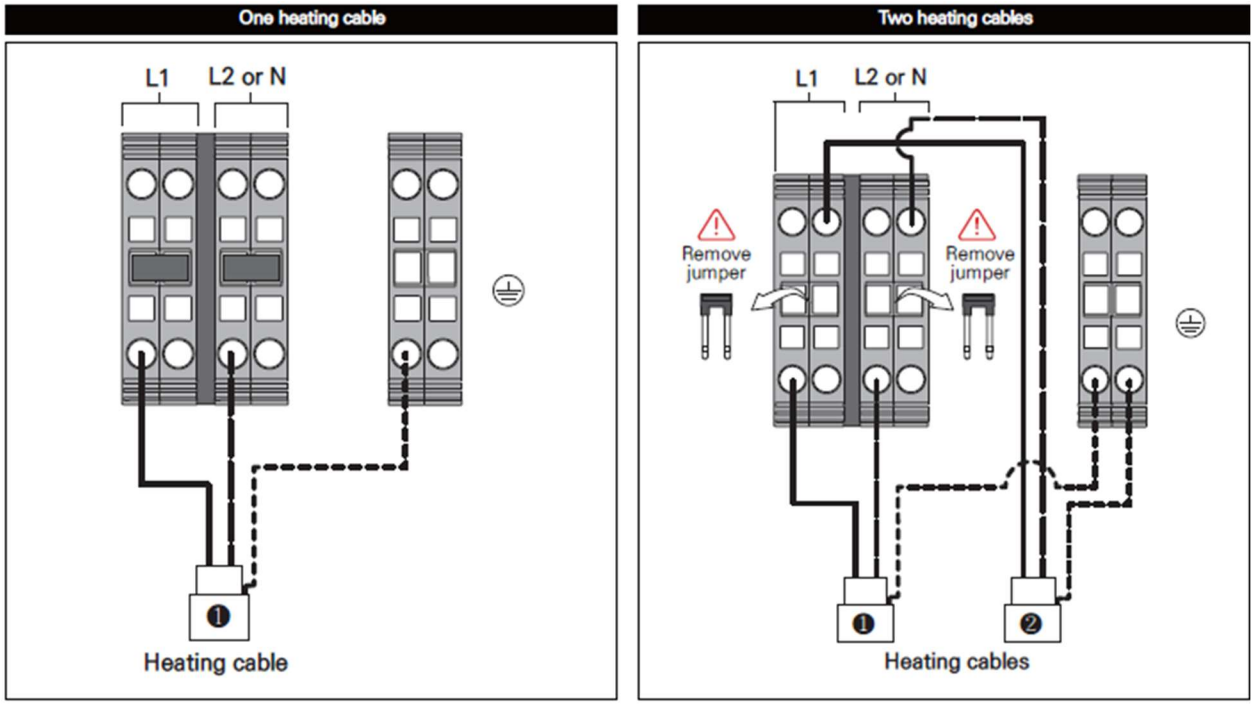

7.4 Specific Conditions of Use

- MEP-HT-IST-1 Series Connection Kits must be installed using MARLEY ENGINEERED PRODUCTS BK-CRGX, BK-LSRX, BK-MSRX, BK-HSRX Series Heating Cables.
- Refer to the installation instructions to reduce the potential of an electrostatic charging hazard on the enclosures of the connection kits.
- The end-user shall mount the equipment per MARLEY ENGINEERED PRODUCTS instructions.

8.0 End Seal / In-Line Splice Connection Kit, MEP-HT-IES-1

Tee/Splice connection and End Termination kit for use with Series *CRGX-CR, *LSRX-CR, *CRGX-CT, LSRX-CT, *MSRX-CT, and *HSRX-CT CT industrial self-regulating heating cables.

Series includes Prefix BK-

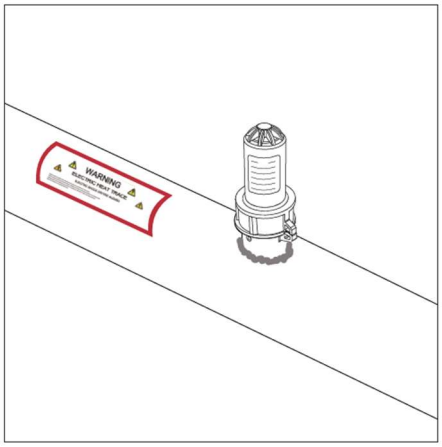

8.1 Kit Contents

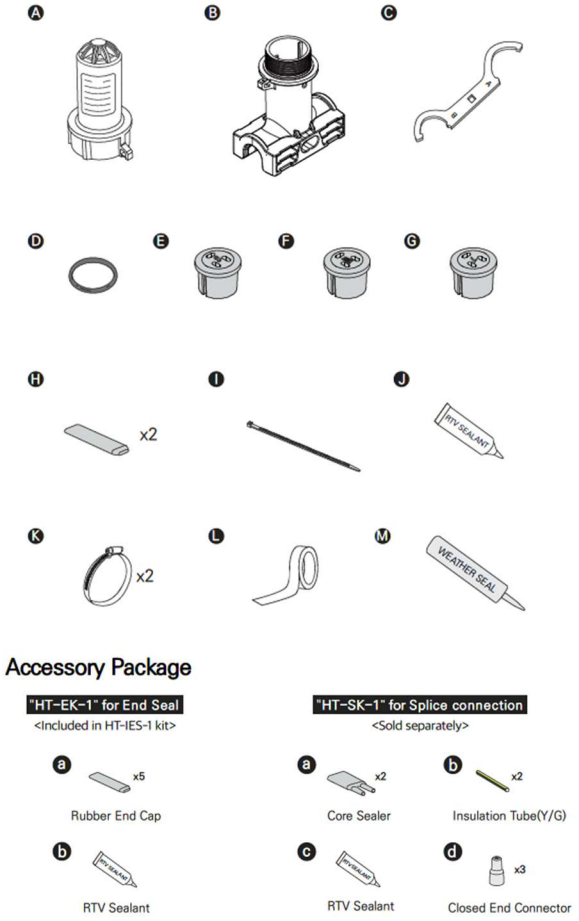

Item	Description	Qty.
A	End Cap	1
B	Pipe Stand	1
C	Wrench	1
D	Stand O-ring	1
E	Sm. Grommet for *CRGX-CT, *LSRX-CT and *MSRX	1
F	Med. Grommet for *CRGX-CR, and *LSRX-CR	1
G	Lg. Grommet for *HSRX	1
H	Rubber End Cap	2
I	Cable Tie	1
J	RTV Sealant	1
K	Pipe Strap (Sold Separately)	2
L	Fixing Tape (Sold Separately)	1
M	Weather Seal (Sold Separately)	1

* Series includes Prefix BK-

8.2 Specifications

Heating cable capability	*CRGX-CR. *LSRX-CR, *CRGX-CT, *LSRX-CT, *MSRX-CT, *HSRX-CT
Ingress protection	NEMA Type 4X, IP66
Ambient Temperature Range	-40°F (-40°C) to +131°F (+55°C)
Min Installation Temperature	-40°F (-40°C)
Installation Accessories (sold separately)	HT-EK-1, HT-SK-1, Pipe straps, Fiberglass tape, Aluminum tape

* Series includes Prefix BK-

8.3 Specific Conditions of Use

- MEP-HT-IES-1 Series Connection Kits must be installed using MARLEY ENGINEERED PRODUCTS BK-CRGX, BK-LSRX, BK-MSRX, BK-HSRX Series Heating Cables.
- Refer to the installation instructions to reduce the potential of an electrostatic charging hazard on the enclosures of the connection kits.
- The end-user shall mount the equipment per MARLEY ENGINEERED PRODUCTS instructions.

Appendix 1. Caution Label - Example English



Item BK-HTCL-1 (10 per package)

- Peel and stick adhesive backing, suitable for adhesion to metal or plastic for outdoor use and exposure to direct sunlight, maximum 194°F (90°C)

- To be posted at appropriate locations and/or at frequent intervals along the circuit. One label for every 10 feet (3 m) of pipe, alternating on either side of the pipe, to be attached to the outside of the thermal insulation weather barrier.

- Also install at equipment requiring periodic maintenance (valves, pumps, instruments, etc.)

Appendix 2. Installation Instruction of heating cable

General Information

IMPORTANT: In order to maintain validity of warranty coverage of the electric trace heating cable systems, follow the steps in this manual including instructions, tests and required documentation of the installation/test report.

WARNING: heat-tracing systems must be installed correctly to ensure proper operation and to prevent shock and fire. Read these important warnings and carefully follow all the installation instructions

To minimize the danger of fire from sustained electrical arcing if the heating cable is damaged or improperly installed, and to comply with Marley Engineered Products requirements, agency certifications, national electrical codes, ground-fault equipment protection must be used on each heating cable branch circuit. Arcing may not be stopped by conventional circuit breakers.

- Approvals and performance of the heat-tracing systems are based on the use of Marley Engineered Products specified parts only. Do not substitute parts or use vinyl electrical tape.
- Bus wires will short if they contact each other. Keep bus wires separated.
- The black heating cable cores are conductive and can cause electrical shortage. They must be properly insulated and kept dry.
- Damaged bus wires can overheat or short. Do not break bus wire strands when preparing the cable for connection.
- Damaged heating cable can cause electrical arcing or fire. Do not use metal attachments such as pipe straps or tie wire. Use only Marley Engineered Products approved fixing tapes and cable ties to secure the cable to the pipe.
- Do not attempt to repair or energize damaged cable. Remove damaged cable at once and replace with a new length using the appropriate Marley Engineered Products splice kit.
- Re-use of the grommets, or use of the wrong grommet, can cause leaks, cracked components, shock, or fire. Be sure the type of grommet is correct for the heating cable being installed. Use a new grommet whenever the cable has been pulled out of the component.
- Use only fire-resistant insulation which is compatible with the application and the maximum exposure temperature of the heat trace cable.
- To prevent fire or explosion in hazardous locations, verify that the maximum sheath temperature of the heating cable (or T-Rating) is below the auto-ignition temperature of the gases in the classified hazardous area. For further information, see the design documentation.
- The minimum installation temperature for BK-CRGX-CR, BK-LSRX-CR, BK-CRGX-CT, BK-LSRX-CT self-regulating heating cables: –50°C
- The minimum installation temperature for BK-MSRX-CT, BK-HSRX-CT self-regulating heating cables: –60°C
- The minimum start-up temperature for BK-CRGX-CR, BK-LSRX-CR, BK-CRGX-CT, BK-LSRX-CT BK-MSRX-CT, and BK-HSRX-CT self-regulating heating cables: –40°C
- Consult with engineering specialists if the application is temperature maintenance and/or the environment is hazardous locations.

- CAUTION: The heat trace system must be protected with thermal insulation and/or appropriate covering to avoid mechanical damage.
- BK-CRGX-CR or BK-LSRX-CR, BK-CRGX-CT, BK-LSRX-CT, BK-MSRX-CT, and BK-HSRX-CT self-regulating heating cables are intended for both indoor and outdoor applications.
- Ground fault equipment protection is required for each circuit.
- De-energize circuits before installation or servicing.
- Keep ends of BK-CRGX-CR, BK-LSRX-CR, BK-CRGX-CT, BK-LSRX-CT, BK-MSRX-CT, and BK-HSRX-CT self-regulating heating cables and kit components dry before and during installation.
- The braid of BK-CRGX-CR, BK-LSRX-CR, BK-CRGX-CT, BK-LSRX-CT, BK-MSRX-CT, and BK-HSRX-CT self-regulating heating cables shall be connected to a suitable grounding terminal.
- The presence of BK-CRGX-CR, BK-LSRX-CR, BK-CRGX-CT, BK-LSRX-CT, BK-MSRX-CT, and BK-HSRX-CT self-regulating heating cables shall be made evident by the posting of caution labels at appropriate locations and/or at frequent intervals along the circuit.
- The insulation resistance of the heating cable shall be measured and recorded after installation and shall not be less than 20 MΩ at 500 Vdc.
- Persons involved in the installation and testing of electric trace heating systems shall be suitably trained in all special techniques required. Installation shall be carried out under the supervision of a qualified person.
- BK-CRGX-CR, BK-LSRX-CR, BK-CRGX-CT, BK-LSRX-CT self-regulating heating cables' minimum bend radius: 0.5" @68°F (13mm at 20°C), 1.6" @-58°F (40mm at -50°C).
- BK-MSRX-CT, BK-HSRX-CT self-regulating heating cables' minimum bend radius: 0.8" 70°F (20mm at 20°C), 1.8" @-76°F (45mm at -60°C).
- BK-CRGX-CR, BK-LSRX-CR, BK-CRGX-CT, BK-LSRX-CT, BK-MSRX-CT, BK-HSRX-CT self-regulating heating cables allow for multiple overlapping of the heating cables. Heating cable does not bend easily in the flat plane. Do not force such a bend, as the heating cable may be damaged.

Notes

1. Connection kits must be used with correctly-installed certified enclosures that are suitable for the application. When connecting certified terminals using associated accessories, the required creepage distances and clearances shall be observed.

2. All heat-traced lines must be thermally insulated.

3. Temperature control is recommended for all freeze-protection and temperature-maintenance trace heating applications.

4. Line sensing method with one or two RTD per heat trace circuits is recommended for temperature maintenance applications.

5. Ambient sensing method can be used for freeze protection applications.

6. Contact Marley Engineered Products for customized temperature control panel with power distribution.

How to Strip

How to prepare heating cable with core sealer.

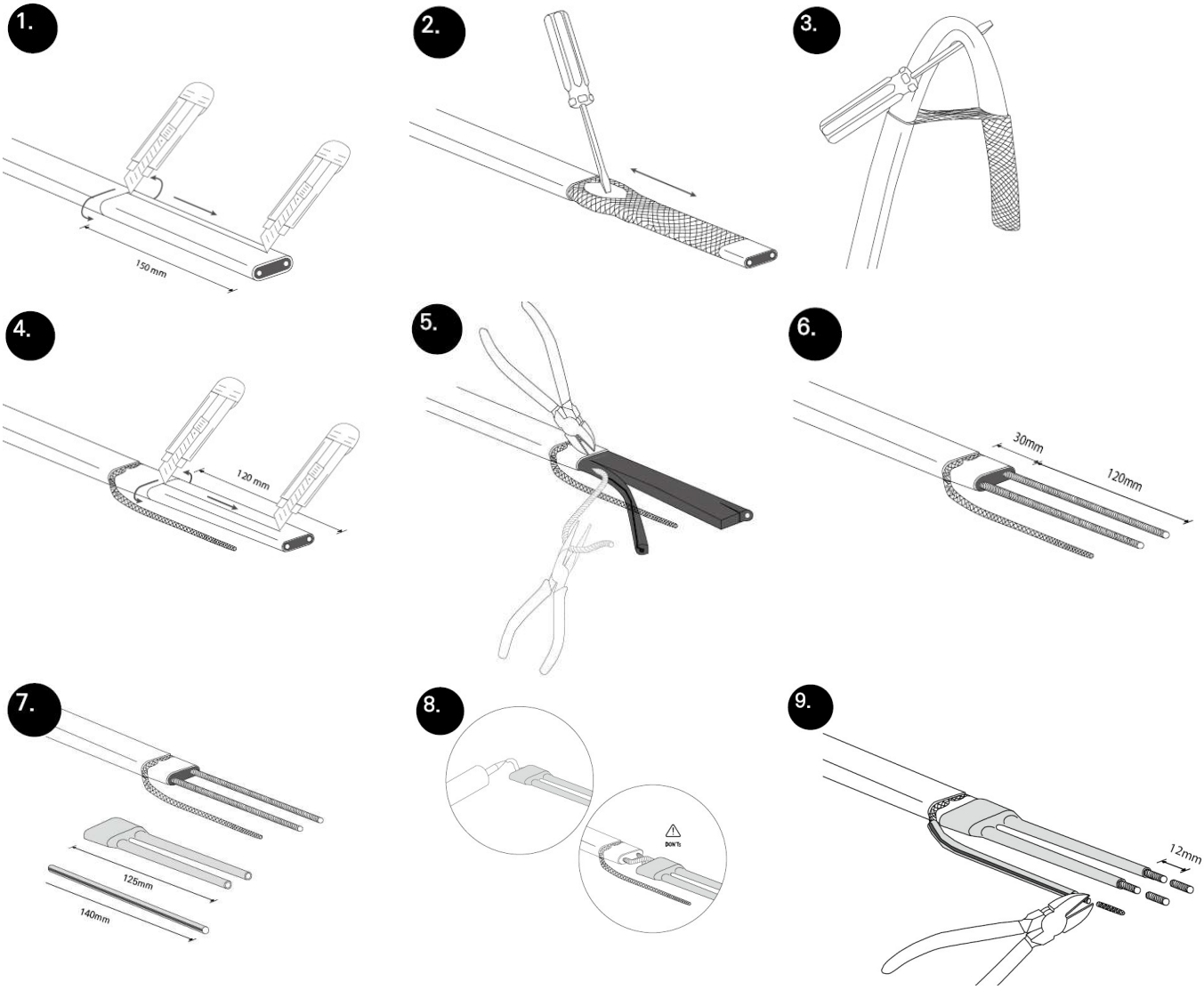

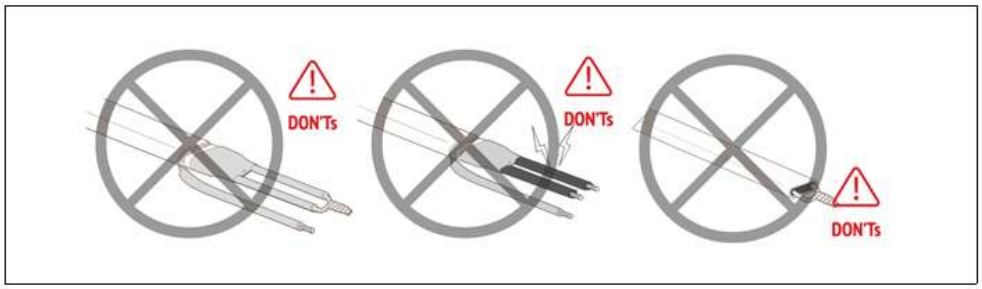

Typical heating cable arrangement

Heat trace cable usually is arranged at 4 and/or 8 o'clock side on the pipe

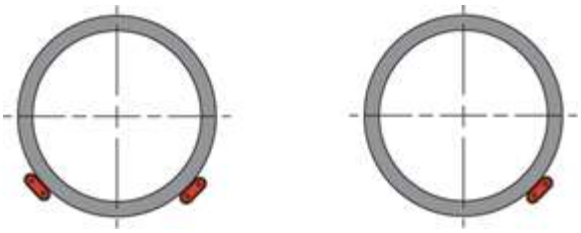

Caution - Be careful not to press the cable and bending

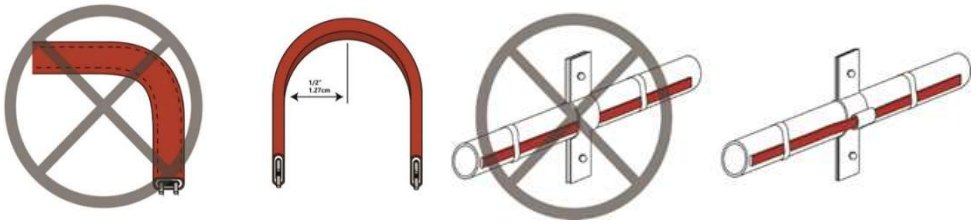

* To minimize the danger of fire from sustained electrical arcing if the heating cable is damaged or improperly installed, and to comply with national electrical codes, ground-fault equipment protection for each heating cable circuit must be designed and installed. Only qualified persons, shall design and install ground fault equipment, circuit breaker, thermal insulation, and provide supervision, service and maintenance.

Field Installation

1 Setting and Pulling cable

1.1 Handling the heating cable

- Use a stable holding device for unwinding the heating cable from the coil.
- Remove the heating cable in a straight line from the spool or reel.
- Do not bend or pinch the heating cable, or pull it over sharp edges.
- Do not tread on or drive over the heating cable; do not use it as a loop for stepping on.
- The ends of the heating cable are always fitted with a protective cap.

1.2 Tapes

- Use recommended attachment tapes to secure the heating cable on the pipe: fiberglass tape, or aluminum tape.

2 Installation on pipes

2.1 Straight tracing

2.1.1 Initial Trace Heater Installation

- Begin installing the trace heater at the proposed end-of-circuit location, following the guidance in the isometric system diagrams (if provided).
- Lay out the trace heater on the pipe, at the 4 or 8 o'clock position (Illustration below), securing it tightly against the pipe with attachment tape. Wrap bands of tape around the trace heater and pipe at intervals of 12" (30 cm) or less, keeping the heating cable in close contact with the pipe.

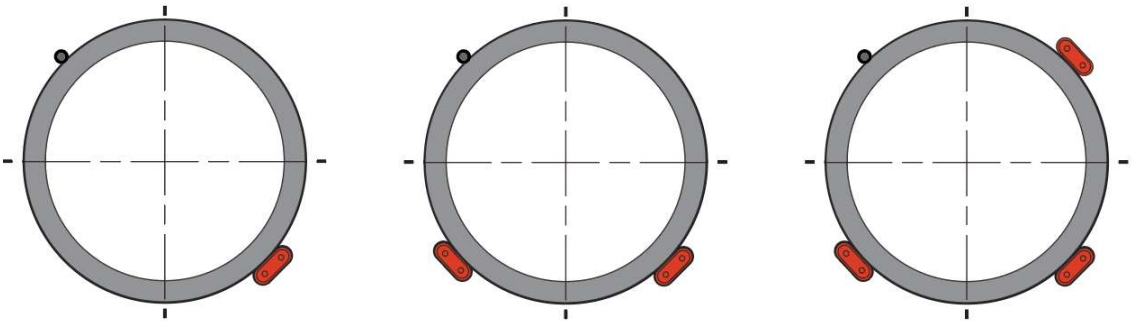

- If accessibility is a problem, the heating cable may be installed at the 10 or 2 o'clock position.
- Refer to below table to estimate the number of rolls of attachment tape required, based on the pipe length and diameter. The table below details the coverage length of a single attachment tape roll for installation purposes. The tape roll is 66 feet in length, and the attachment tape is applied at 1-foot (30 cm) intervals along the pipe.

Tape Length	Pipe Diameter in Inches and Tape Roll Utilization for Pipe Length in Feet															
	½"-1"	1¼"	1½"	2"	3"	4"	6"	8"	10"	12"	14"	16"	18"	20"	24"	30"
66’	252'	202'	168'	126'	84'	63'	42'	32'	25'	21'	18'	16'	14'	13'	11'	8'

- A continuous covering of aluminum foil tape may also be required under special circumstances, including:
  - Where spray or foam thermal insulation will be applied (curing temperature to be verified).
  - Where nonmetallic piping is used.
  - Design requirements dictate the use of aluminum tape.
- Allow extra length of heating cable for power connections, splices, and any in-line heat sinks, such as valves, flanges, and supports. See page 35 through page 37 for details on how to properly install the heating cable at these sites and the allowance of trace heater required.
- Install temperature sensors at least 90° away from heating cable locations as indicated as the black dot in the diagram above.

WARNING: Fire and Shock Hazard. Do not use metal attachments such as pipe straps or tie wire. Do not use vinyl-based electrical or duct tape.

CAUTION: Do not exceed the trace heater’s specified minimum bend radius. Refer to product’s specification sheets for the minimum bend radius of a specific heating cable type.

2.2 Heat Sinks

- Elbow: Locate the heating cable on the outside radius of the elbow. Secure the heating cable to the pipe with attachment tape on each side of the elbow.

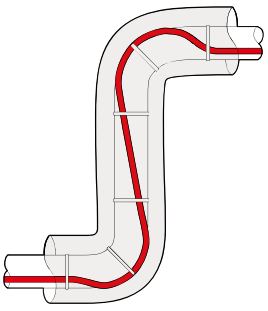

- Support: For uninsulated pipe supports, allow twice the length of the support, plus an additional 16” (40 cm) of trace heater. Install the heating cable in a loop, following as a guide. Insulated pipe supports do not require additional length of heating cable.

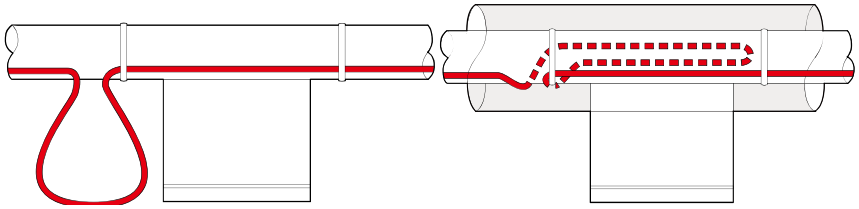

- Flange: Loop the heating cable around the pipe on each side of, and adjacent to, the flange. Be sure to keep the heating cable in close contact with the flange throughout the length of the bend.

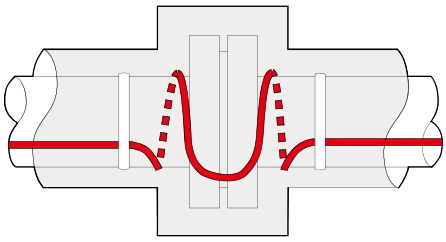

3 Installation on Valves and Pumps

• Valves, pumps, and other miscellaneous equipment require additional passes of trace heater to offset the increased heat loss that occurs at these sites.

• Refer to the isometric system drawings, provided by Marley Engineered Products, for allowances specific to each line and circuit.

• Install the heating cable using a looping technique, using Illustrations below as a guide, such that the valve or pump may be removed for required service and maintenance.

• Keep the heating cable in close contact with the pipe and heat sink areas, to compensate for additional heat loss.

- Valve

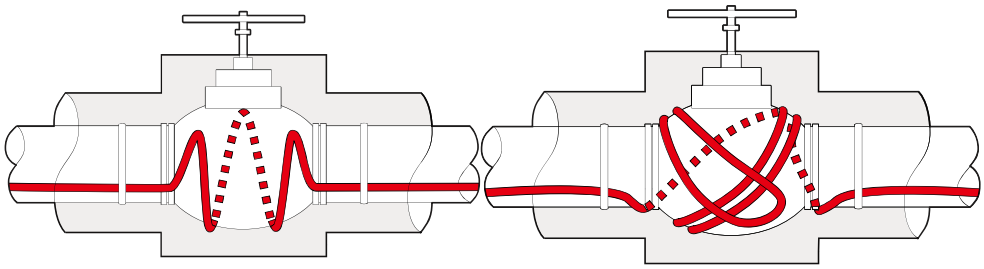

- Pump

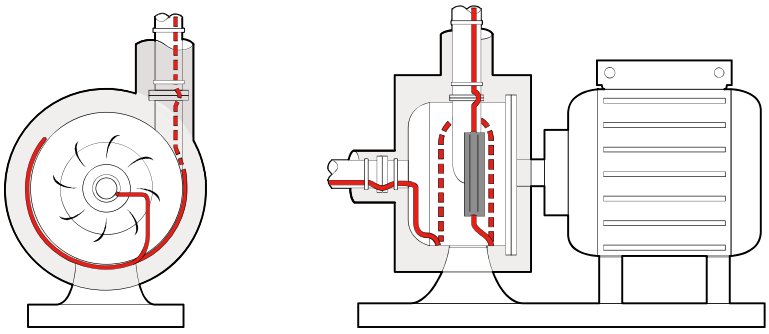

- Gauge

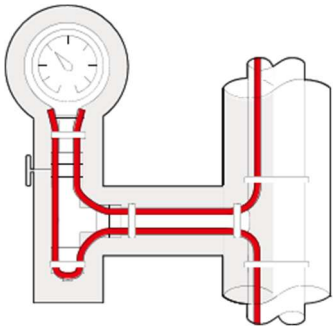

3.1 Completing the Trace Heater Installation

- Secure the end-of-circuit termination kit and work back toward the power supply.
- Keep the heating cable in secure contact with the pipe, using bands of attachment tape at least every 12” (30 cm).
- Secure any required temperature sensors to the pipe using attachment tape, with RTD placed 1.5m away from valves, flanges, supports, elbows, pumps, shoes and other heat sinks.
- Complete any required splice connections in accordance with the installation instructions provided with the splice kit.
- Install any power connection kits in accordance with the detailed installation instructions provided with the kit.
- Connect the metallic braid of the trace heater to a suitable earthing/ground terminal.
- Before completing the power connections, perform an Insulation Resistance (IR) Test and record the values in the “Installation and Inspection Record” (refer to Appendix 3). The recorded value shall not be less than 20 MΩ at 500 Vdc.
- Record the line number and all other associated circuit information in the Installation and inspection record.

4 Installation on Tanks and Vessels

4.1 Upright tank

For tank diameters of up to 6.6 ft (2 m) the heating cable is fastened with a clamping ring. This is mounted on the tank using a clamping tool. To fasten the heating cable prefix a polyester clamping ring with slight tension both to the upper position of the surface to be heated and just over the lower base using a turnbuckle.

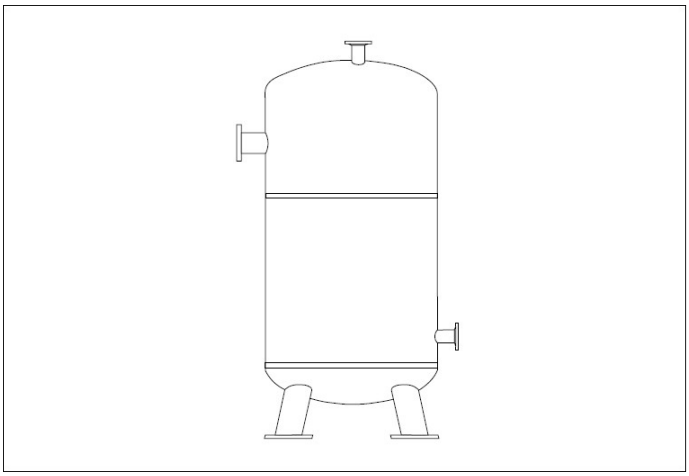

4.2 Horizontal tank

Using a turnbuckle fasten a clamping ring with slight tension both at the beginning and end of the tank, just near the base.

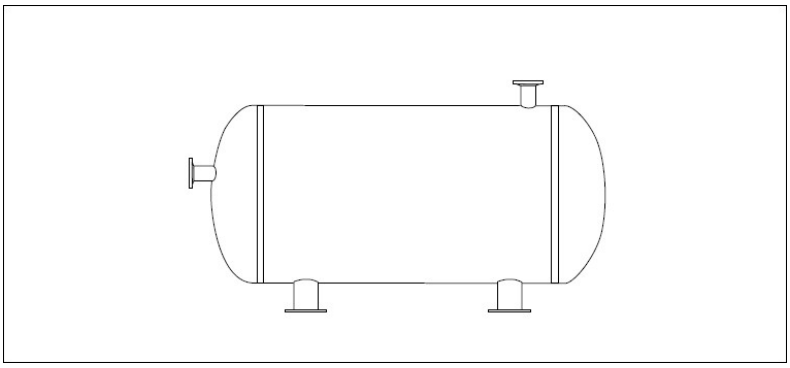

4.3 Installing the heating tape

Install the heating tape, beginning at the supply point, and fix it at the distances specified in the project planning documentation with the aid of the pre-mounted clamping rings. Please also allow for extra material for the base.

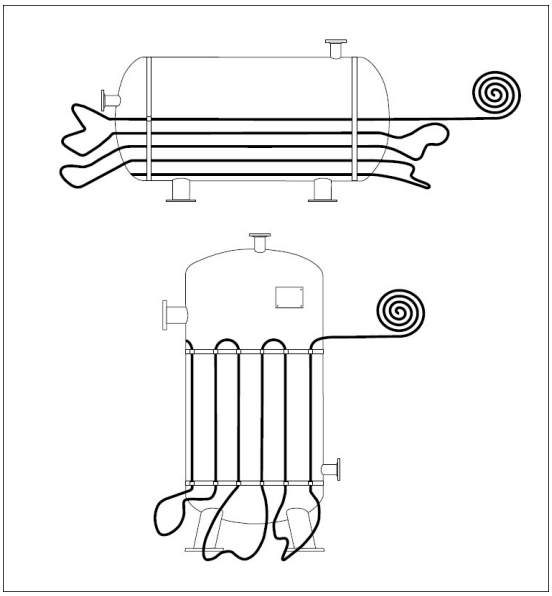

After installing the heating tape, this is then aligned exactly according to the project planning specifications and fixed firmly to the bases and the cylinder using the clamping rings provided. In doing so care should be taken that the clamping rings are not tightened too firmly so as not to damage the heating tape. It should be possible to move the heating tape slightly under the clamping ring.

The distances between the clamping ring fixture should not exceed 10” (25.4 cm). If necessary, the distances should be reduced.

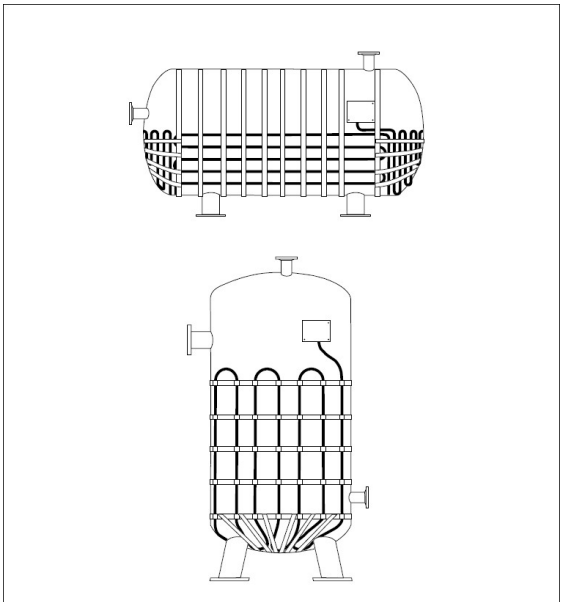

After completing installation of the heating cable, glued over with aluminum self-adhesive tape or the tank is wrapped in aluminum foil. In this way heat transmission is improved and at the same time penetration of insulating material between the heating cable and tank wall is prevented.

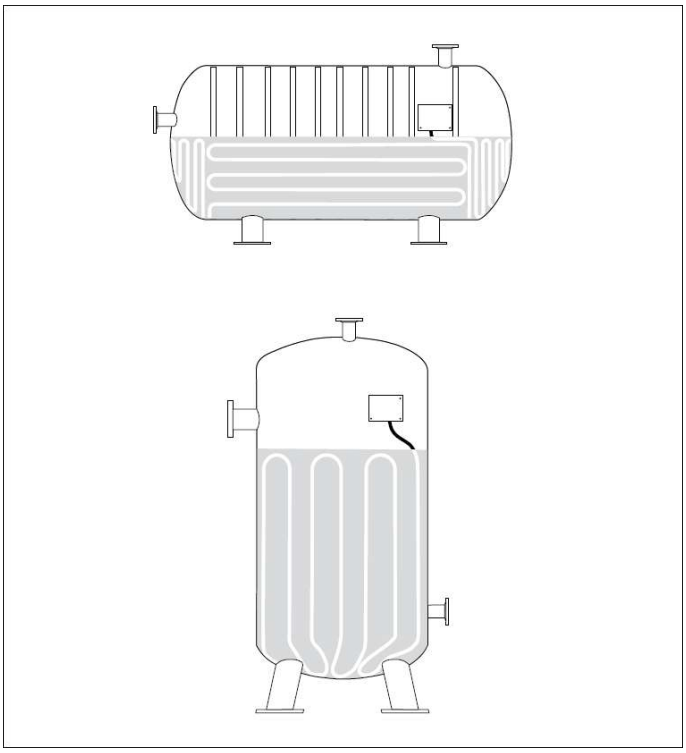

Consult with engineering specialists to inquire appropriate spacing for each application, installation for vessel nozzles and bridles, and recommended placement for MEP-HT Connection Kit installation.

5 Insulation

5.1 Pre-Insulation Checks

Visually inspect the heating cable and components for correct installation and damage. Damaged cable must be replaced. Perform insulation resistance testing, known as a Megger test, prior to covering the pipe with thermal insulation.

5.2 Installing Thermal Insulation

- Properly installed and well-maintained thermal insulation is critical to the performance of the trace heating system. Without proper insulation, heat losses are generally too high to be offset by a conventional heat tracing system.
- Properly insulate all heat sinks, including pipe supports, hangers, flanges, and in most cases, valve bonnets.
- Install a protective vapor barrier over the insulation, regardless of the type or thickness of insulation used. The vapor barrier protects the insulation from moisture intrusion and physical damage and ensures the proper performance of the trace heating system.
- Seal all penetrations around the vapor barrier.
- After ensuring that the insulation is weather-tight, document the completion of the insulation in the After Installation of Thermal Insulation section of the “Installation and Inspection Record”.
- Consult with engineering specialists to inquire heat loss calculation and recommended insulation type and thickness.

5.3 After Installing Thermal Insulation

The presence of trace heaters shall be made evident by posting of caution signs or markings at appropriate locations and/or at frequent intervals along the circuit.

- Apply the provided or equivalent peel-and-stick “Electric Heat Tracing - Caution” labels along the pipe, on the outermost surface of the thermal insulation or vapor barrier, at intervals 10 feet (32 meters) or less.
- Apply the caution labels at any other appropriate locations, such as valves.

5.4 Post-Insulation Testing

After the insulation is complete, perform an insulation resistance test on each circuit to confirm that the cable has not been damaged.

WARNING: Use only fire-resistant insulation, such as fiberglass, mineral wool, or calcium silicate.

Tests

Following test requirements shall be performed in the field and the test results shall be recorded in the "Installation and Inspection record" (refer to Appendix 4).

1 Visual Inspection

- Visually inspect the pipe, insulation, and connections to the heating cable for physical damage. Check that no moisture is present, electrical connections are tight and grounded, insulation is dry and sealed, and control and monitoring systems are operational and properly set. Damaged heating cable must be replaced.
- Check inside heating cable components for proper installation, overheating, corrosion, moisture, and loose connections.
- Check the electrical connections to ensure that ground and bus wires are insulated over their full length.
- Check for damaged or wet thermal insulation; damaged, missing or cracked lagging and weather-proofing.
- Check that end seals, splices, and tees are properly labeled on insulation cladding.
- Check control and monitoring system for moisture, corrosion, set point, switch operation and capillary damage.

2 Insulation Resistance

Perform insulation resistance test at each stage of installation as well as at regular maintenance schedule.

- Before installing heat trace cable
- Before installing connection kits
- Before installing thermal insulation
- After installing thermal insulation
- Before start-up or commissioning
- Regular system inspection
- After any repair

2.1 Procedure

① De-energize the circuit.

② Disconnect bus wires from terminal block, if installed.

③ Set test voltage at 0 Vdc.

④ Connect the negative (–) lead to the heating cable metallic braid.

⑤ Connect the positive (+) lead to both heating cable bus wires simultaneously.

⑥ Turn on the mega-ohmmeter and set the voltage to 500 Vdc; apply the voltage for 1 minute. The meter needle should stop moving. Rapid deflection indicates a short. Record the insulation resistance value in the Inspection Reports.

⑦ Turn off the mega-ohmmeter.

⑧ If the mega-ohmmeter does not self-discharge, discharge phase connection to ground with a suitable grounding rod. Disconnect the mega-ohmmeter.

⑨ Repeat this test between braid and pipe.

⑩ Reconnect bus wires to terminal block.

⑪ Reconnect the thermostat.

3 Power check

The heating cable power per foot (meter) is calculated by dividing the total wattage by the total length of a circuit. The current, voltage, operation temperature, and length must be known. Circuit length can be determined from "as built" drawings, meter marks on cable.

The watts per foot (meter) can be compared to the heating cable output indicated on the product data sheet at the temperature of operation. This gives a good indication of heating cable performance.

- Power the heating cable and allow it to stabilize for 10 minutes, then measure current and voltage at the junction box. If a thermostat or controller is used, refer to details below.
- Check the pipe temperature under the thermal insulation at several locations.
- Calculate the power (watts/ft) of the heating cable by multiplying the current by the input voltage and dividing by the actual circuit length.

  Power (w/ft or m) = Volts (Vac) x Current (A) / Length (ft or m)

4 Ground-fault test

Test all ground-fault breakers per manufacturer's instructions or check for any alarms in case controller is installed.

5 Final Inspection

- Perform and record IR test after thermal insulation and/or before commissioning to verify that the trace heater has not been damaged during installation.
- Ensure that all junction boxes, temperature controllers, cable glands, etc., are properly secured and sealed.
- Refer to 3 Power check section and record measurements under the power check section in Appendix 3 – Installation and Inspection Records.
- If a control device is used, ensure it is configured to switch off the heating cable to prevent the surface temperature from exceeding the Temperature Class (T-rating) specified for the hazardous area, in accordance with NEC/CEC and/or IEC 60079-30-1.

Appendix 3. Installation and Inspection Records

Appendix 3. Installation and Inspection Records						
1. Please enter the the information to your best knowledge. 2. All applicable tests or checks below must be performed at installation or at any time the cable is cut, damaged, or reinstalled.						
Part I: General Information						
Facility						
Circuit Number						
Circuit Lengh						
Circuit Breaker Number						
Drawing Number						
Heating Cable Model						
Connection Accessories						
Date (When Part I is Recorded)						
Part II: Visual Checks	**Date/Initial**	**Date/Initial**	**Date/Initial**	**Date/Initial**	**Date/Initial**	**Date/Initial**
Any Physical Damages, Moisture, Liquids, Corrosion Cables?						
Any Moisture, Liquids, Corrosion, Damage inside Junction Boxes or End Seal?						
Are Bus Wires and Braid Connected properly inside Junction Boxes?						
Are the Junction Box Lock Nut and Lid Water Tight?						
Is the Thermal Insulation Wet or Damaged?						
Is the Thermal Insulation Complete and Waterproof?						
Are Caution Labels Fixed on Outside of Thermal Insulation (Every 10ft or 3m or Less)?						
Part III: Thermal Insulation Checks						
Meggar Test (500Vdc, bypass Controls) - Test A: Bus to Braid (MΩ)						
Meggar Test (500Vdc, bypass Controls) - Test B: Braid to Pipe (MΩ)						
Are Connection Kits Outside of Thermal Insulation and Visible?						
Part IV: Electrical and Power Check						
Circuit Voltage (V)						
Voltage at the End of Circuit (V)						
Circuit Amperage (A) after 30 min and Ambient Temperature (°F)						
Pipe Temperature (°F)						
Part V: Control Checks						
Is Temperature Control Set Properly?						
Is the Sensor Located and Fixed on Pipe Properly?						
Is the Sensor Protected and Undamaged?						
Part VI: Other **(List any other tests or inspection results)**						