

WHERE DESIGN AND COMFORT MEET

THX zero vertical profile eliminates visual disruptions while preserving the building's heat envelope and amplifying building aesthetics. Maximize building comfort and reclaim floor space with the most compact, in-floor convector on the market today.

Brought to you by Marley Engineered Products—a trusted leader in comfort solutions—THX is designed with durability in mind to withstand daily cleaning, water and debris.

THX

THE OUT-OF-SIGHT, OUT-OF-MIND UL LISTED **IN-FLOOR PERIMETER HEATER**

BERKO®

A Marley Engineered Products Brand



THX

Supplemental heat that won't compromise your building's aesthetics.

UL listed with sealed j-boxes, for water and debris management piece of mind.

MAXIMIZE BUILDING COMFORT

THX directly addresses the building's need for supplemental heat against the curtain walls and glazing, while fully integrating with the architects' designed interior spaces. Whether you are starting a new building project or adding to an existing spec, count on the THX to deliver desired performance through unique features and flexible installation options. From design to installation and servicing, the THX is built to be quickly, easily installed and maintained in order to provide the superior comfort solutions your client demands.



THX

Most compact unit in its class[1] with 30% more output[2] /cu.ft. than the competition

IDEAL SOLUTION FOR

- **CONFERENCE ROOMS**
- **HALLWAYS**
- **LOBBIES**
- **OFFICES**
- **RETAIL SPACES**



[1]Electric, In-Floor Natural Convection Heater, as of Jan. 2020
[2]Output measured in watts

c UL US

Conforms to
ANSI/UL2021 and
CSA C22.2, NO. 46

PERIMETER HEAT THAT PROMOTES YOUR VISION

THX warms air at the base of exterior windows, creating a natural updraft that protects your building's heat envelope and curtain walls. Windows stay free of fog and condensation and warm air circulates throughout the space with no need for a fan or blower.

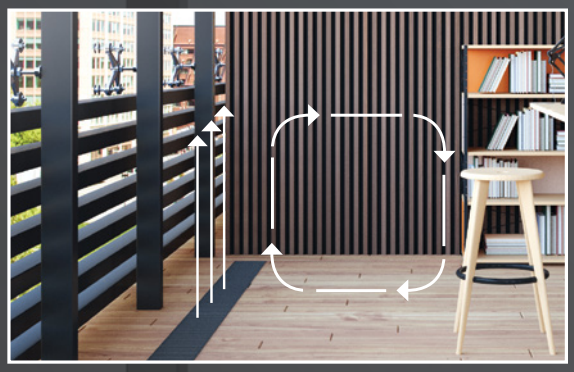

Create an effective draft barrier to minimize perimeter heat loss against glazing

Modularized units can be configured by one service professional for easy field connection, control and installation.

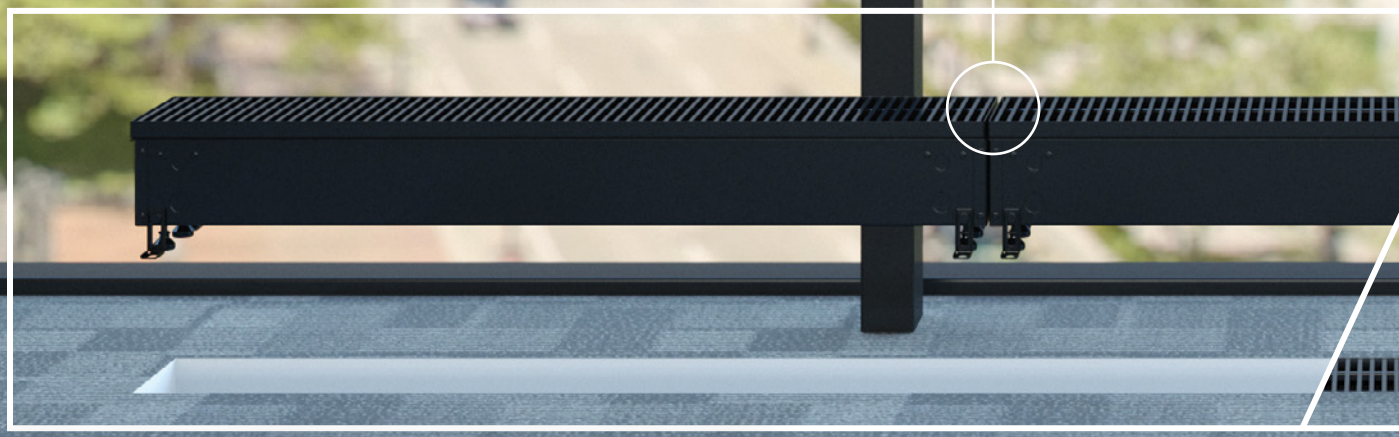

Drop in and use leveling legs to raise THX to floor height.

THREE UL APPROVED MOUNTING OPTIONS

Standard on every unit, THX is listed with three different mounting styles to fit any floor type: concrete pour, direct with legs or frame mounted to best fit the install site. The optional Mounting Legs allow for additional securing points and the Leveling Legs allow you to raise each unit to the appropriate height for your install.

The most versatile installation on the market![1]



CONCRETE POUR



DIRECT WITH LEGS



FRAME MOUNTING

THX is flush or surface mounted to fit any floor type.

[1]As of Jan. 2020

MULTIPLE AESTHETIC OPTIONS

Heavy duty, gauge extruded aluminum bar grilles

Grilles available for flush or surface mount

Blank and corner sections create a seamless look

Three color options

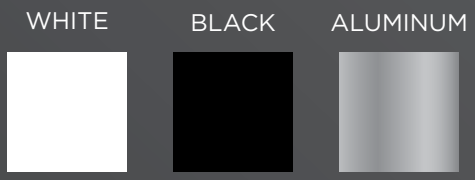

PRODUCT INNOVATIONS

MAINTAIN THE BUILDING'S HEAT ENVELOPE

THX creates an effective draft barrier, preventing condensation on exterior windows and curtain walls and preserving the primary HVAC system from inefficiency and higher utility costs.

UL LISTED OUT-OF-THE-BOX WITH SEALED J-BOXES

Avoid the time and expense of certifying on site. THX is designed with water and debris management in mind. It features a sealed junction box and raised connection points, plus a wire screen beneath the grille catches debris to prevent it from entering the unit.

MAXIMUM PERFORMANCE, BUT HIDDEN

Get maximum heat output — 30% more watts per cu. ft. than the competition[1] — with the most compact unit in its class.[2]

KEY FEATURES

EASY EXTENSIBILITY

THX units come in 2- to 5-foot modular lengths for easy one-person handing and wiring when adding multiple units.

EASY MOUNTING

Listed for concrete pour, mounting with legs or using a frame. Included leveling legs raise the unit to the appropriate height for flush installations and optional mounting legs provide an additional securing point.

EASY INTALLATION AND MAINTENANCE

All units are factory wired and preassembled for out-of-the-box readiness. drop-in installation, and easy access for cleaning and maintenance, with one service professional.

INVISIBLE HEAT SOURCE

THX drops into the floor, leaving only the architectural grille visible, so you get unobstructed sight lines and more design space to work with.

RATED FOR HIGH TRAFFIC AREAS

THX units can support double the UL weight test rating — durable enough to stand up to foot traffic in busy spaces. These units are placed in the floor where they won't show dents and scratches as easily as other heaters.

[1]As of Jan. 2020
[2]Electric, In-Floor Natural Convection Heater

ACCESSORIES

Multiple Grill Finish Options

End to End Connection Points

½" & ¾" Electrical Knockouts

Leveling Legs

Mounting Legs

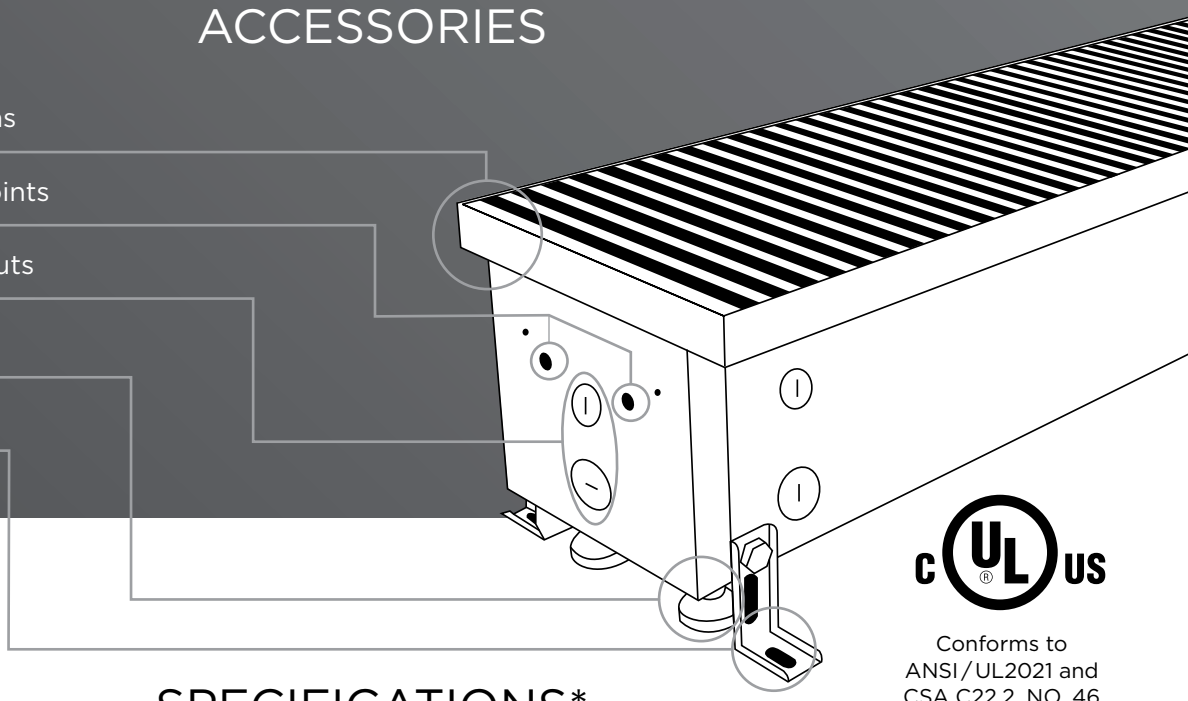

Conforms to ANSI/UL2021 and CSA C22.2, NO. 46

SPECIFICATIONS*

	2 FT.		3 FT.		4 FT.		5 FT.	
MODEL	THXB02188	THXB02250	THXB03188	THXB03250	THXB04188	THXB04250	THXB05188	THXB05250
WATTS/FT.	188	250	188	250	188	250	188	250
TOTAL WATTAGE (BTUs)	376 (1282)	500 (1705)	564 (1923)	750 (2558)	752 (2564)	1000 (3410)	940 (3205)	1250 (4263)
VOLTAGE	208/240/277		208/240/277		208/240/277		208/240/277	
AMPERAGE	1.8/1.6/1.4	2.4/2.1/1.8	2.7/2.4/2.0	3.6/3.1/2.7	3.6/3.1/2.7	4.8/4.2/3.6	4.5/3.9/3.4	6.0/5.2/4.5

For all sizes above 5', the units can be modularized together. Reference instruction manual for additional detail.

CABINET/ENCLOSURE

- 16-gauge galvanneal steel enclosure
- ½" and ¾" electrical knockouts on each end, side and bottom

SIZE

- Low profile: 6⅛" wide by 6⅛" deep
- Available in lengths from 2' to 5'
- Standard unit connection kit for lengths beyond 5 ft.

HEATING VOLUME AND OUTPUTS

- Single phase, 208V, 240V and 277V models available
- 188 or 250 watts per foot

HEATING ELEMENTS

- Nickel-Chromium wire heating element encased in steel sheath with aluminum fins (standard)
- Stainless steel heating element with aluminum fins (optional)

WIRING AND ELECTRICAL

- UL Listed with sealed junction boxes
- All controls included in unit so no need for additional control boxes
- End connection points and wire-way
- Dual safety limit chain with both manual and automatic reset

WATER AND DEBRIS MANAGEMENT

- Debris catch screen included
- UL Listed for water management
- Elements and connection points are raised off the floor

OPTIONAL BUILT-IN CONTROLS

- On/off Switch: for easy and safe servicing
- Power Relay: for BMS connections
- Transformer Relay: for remote wall thermostat

*Berko reserves the right to change specifications without prior notice.

FLUSH GRILLE DIMENSIONS

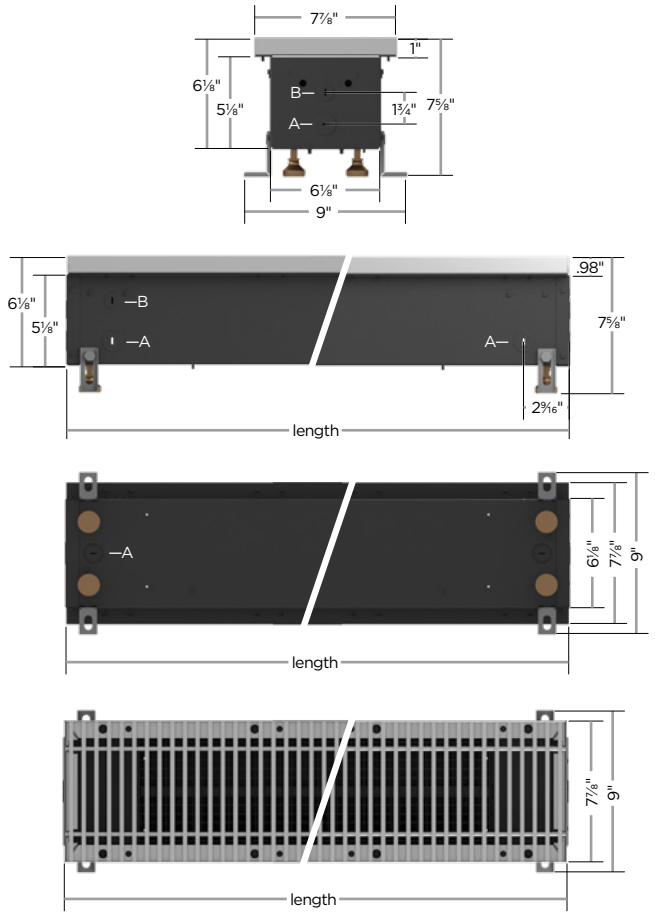

Measurements

Size	2 ft.	3 ft.	4 ft.	5 ft.
Length	24⅛" (613mm)	36⅛" (918mm)	48⅛" (1,223mm)	60⅛" (1,528mm)
Grille Width	7⅞" (200mm)			
Cabinet Width	6⅛" (156mm)			
Depth	6⅛" (156mm)			
A – Diameter (Nested)	½" (¾")			
B – Diameter	½"			
Leveling Leg Adjustment	1–2" (26–52mm)			

SURFACE GRILLE DIMENSIONS

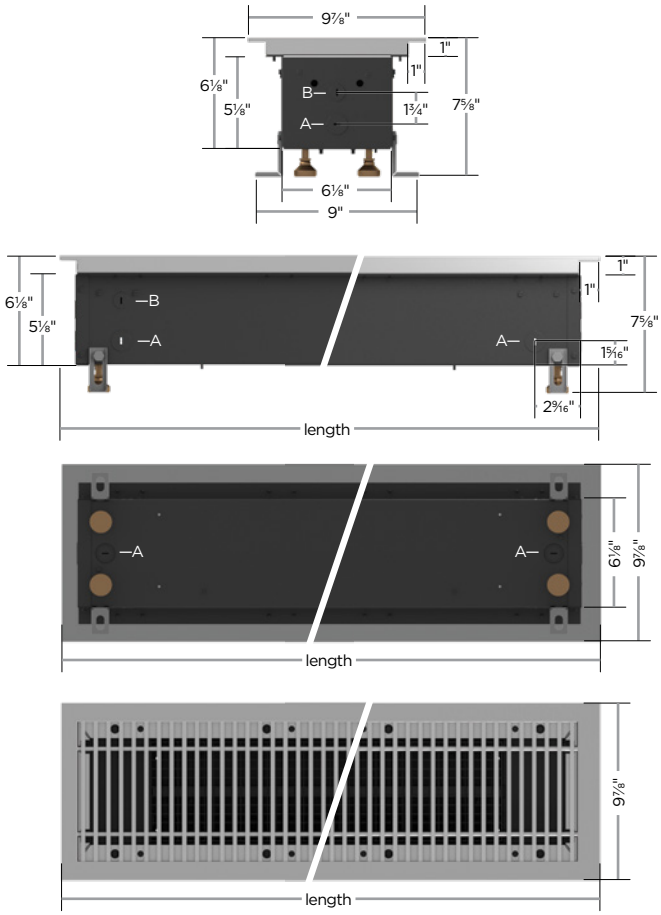

Measurements

Size	2 ft.	3 ft.	4 ft.	5 ft.
Length	26⅛" (664mm)	38⅛" (969mm)	50⅛" (1,273mm)	62⅛" (1,578mm)
Grille Width	9⅞" (251mm)			
Cabinet Width	6⅛" (156mm)			
Depth	6⅛" (156mm)			
A – Diameter (Nested)	½" (¾")			
B – Diameter	½"			
Leveling Leg Adjustment	1–2" (26–52mm)			

For all sizes above 5', the units can be modularized together. Reference instruction manual for additional detail.

Find out how you can incorporate THX into your next supplemental heating spec.
Visit **CustomHeatSolutions.com/THX-Trench-Heater** or contact your Berko representative.

Based out of Bennettsville, South Carolina, Marley Engineered Products delivers heating and ventilation solutions for maximum comfort in residential, commercial and industrial settings.

Marley offers a full line of electric baseboard space heaters, convection heaters and radiant ceiling heat models. Whether an electric infrared heater, a portable garage heater, an electric unit heater or other wall mounted heaters are required, Marley Engineered Products has the supplemental heat you need.

On the ventilation side, Marley offers air curtain models plus exhaust and ceiling fans, including fans designed for specialized applications.

Marley connects customers with comfort in almost any space.
To learn more please visit MarleyMEP.com.
For technical support please call 1-800-642-4328.

Marley Engineered Products
470 Beauty Spot Road East
Bennettsville, SC 29512

THX-BRO_2020-09

BERKO®
A Marley Engineered Products Brand